# ENGINEERING REPORT

## Inc. Village of Westhampton Beach Sewer Collection and Conveyance System (Phase 1 Sewer Service Area) Connection to Suffolk County Sewer District No. 24

## Volume 1

Westhampton Beach, New York

H2M Project No.
WHBV 18-01

**JULY 2018**

**Prepared for:**
Inc. Village of Westhampton Beach
165 Mill Road
Westhampton Beach, New York 11978

**Prepared by:**
H2M architects + engineers
538 Broad Hollow Road, 4th Floor East
Melville, New York 11747

H 2 M architects + engineers

# TABLE OF CONTENTS

0.0 Executive Summary ..... 1
1.0 Site Information ..... 1
1.1 Location ..... 1
1.2 Geologic Conditions ..... 1
1.3 Environmental Resources ..... 1
1.4 Flood Plain Considerations ..... 1
2.0 Ownership And Service Area ..... 2
2.1 Existing Inter-Municipal Agreements ..... 2
2.2 Industrial Discharges ..... 2
2.3 Population Trends and Growth ..... 2
3.0 Existing Facilities And Present Condition ..... 3
3.1 Permit Conditions and Effluent Discharge Limits ..... 3
3.1.1 Phase 1 Service Area Design Flow ..... 4
4.0 Definition of the Problem ..... 4
4.1 Public Health and Sanitation ..... 4
4.2 Reasonable Growth ..... 4
5.0 Inc. Village of Westhampton Beach Financial Status ..... 5
6.0 Evaluation of Design Alternatives ..... 5
6.1 Collection and Conveyance System Considerations ..... 5
6.1.1 Gravity Sewers ..... 5
6.1.2 Low Pressure Sewers ..... 6
6.2 Alternative No. 1 ..... 6
6.2.1 Phase 1 Service Area Sewer Design ..... 8
6.2.2 LPS System Grinder Pump Station Design ..... 10
6.2.3 North Drainage Zone Pump Station Design ..... 10
6.2.4 North Drainage Zone Force Main Design ..... 12
6.2.5 South Drainage Zone Pump Station Design ..... 14
6.2.6 South Drainage Zone Force Main Design ..... 16
6.3 Alternative No. 2 ..... 17
6.3.1 Phase 1 Service Area Sewer Design ..... 18
6.3.2 LPS Grinder Pump Station Design ..... 19
6.6 Alternative Cost Comparison ..... 20
7.0 Recommended Alternative ..... 21
7.1 Basis of Selection ..... 21

7.2 Cost Opinion ..... 21
7.3 Project Schedule ..... 23
7.4 Special Site Considerations ..... 23
7.5 Next Steps ..... 24

## TABLES

TABLE 6.2.1 Wet Well Design Elevations (Alt. No. 1 – North Drainage Zone)
TABLE 6.2.2 Wet Well Design Elevations (Alt. No. 1 – South Drainage Zone)
TABLE 6.6.1 Project Cost Comparison
TABLE 7.2.1 Project Cost Opinion – Alternative No. 1

## FIGURES

FIGURE 1 Phase 1 Service Area Overview Map
FIGURE 2 Alternative No. 1 – North Drainage Zone P.S. Section
FIGURE 3 Alternative No. 1 – South Drainage Zone P.S. Section
FIGURE 4 Phase 1 Service Area Planned InfrastructureOverview

## EXHIBITS

EXHIBIT A Historical Site Surveys and Test Boring Logs
EXHIBIT B FEMA FIRM for Westhampton Beach area
EXHIBIT C Map & Plan: Formation of the Inc. Village of Westhampton Beach Sewer System (Phase 1 Sewer Service Area) for Moniebogue Bay
EXHIBIT D SCSA Resolution 51-2017

## APPENDICES

APPENDIX A Inc. Village of Westhampton Beach Audited Financial Report (Village must provide)
APPENDIX B Collection System Plan & Profiles
APPENDIX C Pump Station Preliminary Equipment Cuts
APPENDIX D Engineer's Construction Cost Opinion
APPENDIX E Engineer Report Certification
APPENDIX F Engineer's Construction Cost Opinion Back-up

## 0.0 EXECUTIVE SUMMARY

The surface water bodies of East Moriches Bay, Moniebogue Bay, and Quantuck Bay, that surround the Inc. Village of Westhampton Beach (Village) have experienced an increase in recurring red, brown and rust tides and have been added to the New York State Department of Environmental Conservation (NYSDEC) Section 303(d) List of Impaired Waters Requiring a TMDL/Other Strategy in 2010. The pollutants of concern identified by the NYSDEC are nitrogen and low dissolved oxygen with onsite wastewater disposal systems and urban runoff as the suspected sources. The impacts from the ongoing degradation of these surface water bodies can be seen through the significant loss of native plant and shellfish species. A recent study prepared by Dr. Christopher J. Gobler has also identified the high nutrient loading to be attributed to outdated onsite septic systems and cesspools serving the surrounding homes and businesses located within the Village of Westhampton Beach (Village) [1].

As a first step towards mitigating the existing water quality issues, the Village plans to construct a sewer system to collect and convey 60,000 gallons per day (GPD) of sanitary wastewater generated within the Main Street business corridor (i.e. Phase 1 service area) to the existing wastewater treatment plant located in Suffolk County Sewer District No. 24 (SCSD #24) at the Gabreski Airport. Treated effluent discharged from the existing wastewater treatment plant is reintroduced to the ground via subsurface leaching pools with nitrogen concentrations reduced below the current drinking water standard of 10 mg/L. Therefore, the Village's sewer system will remove nitrogen-rich onsite wastewater point sources from continuing to discharge to the ground, thereby contributing to the improvement of water quality in the surrounding water bodies and also help promote revitalization of the local economy through smart-growth initiatives[2].

Based on the formal sewer connection approval issued by the Suffolk County Sewer Agency (SCSA) in 2017, the Village will be required to enter into a "Connection Agreement" with Suffolk County Department of Public Works (SCDPW) prior to conveying flow to SCSD #24. It is currently understood, that the final "Connection Agreement" will transfer the operation and maintenance responsibilities of the collection and conveyance system from the Village to SCDPW after it is constructed and accepted for beneficial use. This Volume 1 Engineering Report provides the detailed design summary for the collection and conveyance system infrastructure required to convey flow generated within the Phase 1 service area to SCSD #24.

Improvements to the existing SCSD #24 wastewater treatment plant and subsequent modification to the existing State Pollution Discharge Elimination System (SPDES) permit will become necessary at some point in the future to accommodate the additional flow from the Village when the existing in-District development reaches its full build-out potential. A separate Volume 2 Engineering Report is being prepared concurrent with this report to summarize the detailed design elements for the treatment plant improvements necessary to accommodate an ultimate design flow of 150,000 GPD, which is comprised of the 60,000 GPD flow from the Village plus the in-District full build-out flow. The future wastewater treatment plant improvements are expected to be completed by SCDPW under the requirements stipulated in the final "Connection Agreement."

---

[1] Dr. Christopher J. Gobler, PhD. Quantifying Nitrogen Loading to from Village of Westhampton Beach to Surrounding Water Bodies and Their Mitigation by Creating a Sewer District. June 2017. Prepared for the Village of Westhampton Beach, Village Board of Trustees.

[2] Definition of: Smart growth; (noun): planned economic and community development that attempts to curb urban sprawl and worsening environmental conditions.
https://www.google.com/search?ei=MTE2W_ScH6XH5gLvzY6wCw&q=smart+growth%2C+definition&oq=smart+growth%2C+definition&gs_l=psy-ab.3..0l4j0i22i30k1l6.101040.102511.0.102739.12.12.0.0.0.0.117.1131.8j4.12.0....0...1.1.64.psy-ab..0.12.1122...0i67k1j0i10k1.0.wAshF4f1Zv0

# 1.0 SITE INFORMATION

The project referred to as the Inc. Village of Westhampton Beach Phase 1 Sewer Service Area, referred to as Phase 1 service area throughout this report, is in the southwest portion of the Town of Southampton (Town) located within the Inc. Village of Westhampton Beach (Village).

## 1.1 Location

The entire Village makes up approximately 1,761 acres of the 89,728 acres that is the entire Town of Southampton. The Phase 1 service area is comprised of 156 Suffolk County tax lots across approximately 31 acres within the Village, as depicted in **Figure 1.** The parcels within the Phase 1 service area are primarily comprised of commercial lots, with some high-density residential and vacant parcels. The commercial properties consist mainly of restaurants, store fronts, and municipal buildings, consistent with a typical main street business area in Suffolk County, Long Island. The high-density residential lots are mainly comprised of attached condominiums and apartments.

## 1.2 Geologic Conditions

The topography in the Phase 1 service area generally trends from north to south and inward towards Moniebogue Bay. Ground surface elevations within this area generally range between approximately 12-feet to 5-feet above mean sea level (MSL) based on commercially available topographical mapping information through the New York State GIS Clearinghouse. Groundwater elevations in the Phase 1 service area are found to range between approximately 2-feet to 10-feet below ground surface (BGS) based on a review of historical site surveys and associated test boring logs, which have been included in **Exhibit A**. Most of the planned sewer system infrastructure will require dewatering. This was considered when computing project construction costs. Soil borings with a geotechnical report will be completed prior to detailed design and construction to verify soil conditions and groundwater elevations.

## 1.3 Environmental Resources

The closest limit of construction disturbances to surface water for the proposed work is approximately 10-feet from Moniebogue Bay, approximately 0.9 miles upstream of where it discharges to Quantuck Canal, which feeds Quantuck Bay to the east and East Moriches Bay to the west. As defined by the US Fish & Wildlife Service National Wetland Inventory, at the point of discharge, Moniebogue Bay and the downstream water bodies are classified as estuarine and marine deep-water habitat (E1UBL)[3]. The NYS DEC (6 CRR-NY X A 2 701) classifies these water bodies as Class SA, which is defined "as a saline surface water for shell fishing for market purposes, primary and secondary contact recreation and fishing. These waters shall be suitable for fish, shellfish and wildlife propagation and survival."[4]

Construction will be sequenced to both minimize impacts to businesses and community activities that normally occur during the summer season, as well as to maintain sanitary service to all properties affected and to prevent any unpermitted discharge of sanitary wastewater. This will limit the impact on the surrounding surface waters described above that could arise due to sanitary overflows. To further minimize the impact of construction activities such as excavation and demolition, a Storm Water Pollution Prevention Plan (SWPPP) will also be prepared and implemented to prevent discharge of sediments and debris into waterways.

## 1.4 Flood Plain Considerations

The planned Phase 1 service area collection and conveyance infrastructure is located within the 0.2% and 1% annual chance flood hazard zones and is being conducted inside an area of minimal flood hazard (Zone

[3] Data was obtained from: https://www.fws.gov/wetlands/data/Mapper.html
[4] Data was obtained from: https://govt.westlaw.com/nycrr/Document/I4ed840c2cd1711dda432a117e6e0f345?viewType=FullText&originationContext=documenttoc&transitionType=CategoryPageItem&contextData=(sc.Default)

X) as described by FEMA Flood Insurance Rate Map (FIRM) number 36103C0767H, effective on September 25, 2009. A copy of the FEMA FIRM is included as **Exhibit B**. As such, the design of the collection and conveyance infrastructure for the Phase 1 service area will include features such as manhole inserts, elevated sewer vents, water tight access covers and final pump station slab elevations set above flood plain elevation to mitigate potential inflow concerns for portions of the system located within the flood zone(s) delineated on the FIRM.

## 2.0 OWNERSHIP AND SERVICE AREA

The Village formed the Phase 1 service area based on information presented in the final Map and Plan dated October 2017, which is provided as **Exhibit C**. The tax lots located within the Phase 1 service area are non-contiguous and generally bounded by Potunk Lane and Mitchell Road to the west, Mill Road to the north, Library Avenue to the east and Stevens Lane to the south. Moniebogue Bay extends into middle of the Phase 1 service area from the southern boundary. The entire Phase 1 service area falls completely within the boundary of the Village.

### 2.1 Existing Inter-Municipal Agreements

On December 18, 2017, the Suffolk County Sewer Agency (SCSA) passed Resolution No. 51-2017 granting formal approval for the connection of 60,000 GPD from the Village of Westhampton Beach (SH-1687) To SCSD #24. A copy of this resolution is provided as **Exhibit D**. Currently, the Village is engaged with Suffolk County Department of Public Works (SCDPW) to discuss the terms and conditions that will be written into the final inter-municipal sewer "Connection Agreement." To date, the Village and SCDPW have agreed that SCDPW will assume the responsibility for the operation and maintenance of the collection and conveyance infrastructure after it is constructed, tested and turned over for beneficial use. The Village will be responsible for the design and construction of the collection and conveyance infrastructure.

### 2.2 Industrial Discharges

As previously stated, the Phase 1 service area is comprised of uses typical of a municipal business district, and does not include any industrial uses whose wastewater discharge would otherwise require pre-treatment before entering the sewer system. Furthermore, current zoning restrictions in place do not permit industrial uses within the Phase 1 service area.

No hauled waste will be received by the Village, and no hauled waste is received in SCSD #24.

### 2.3 Population Trends and Growth

The population for the Village recorded between 2010 and 2014 was 1,817, which was 4.47% less than the population recorded in 2000[5]. These historical population records represent the entire Village and are not specific to the Phase 1 service area. To induce smart growth within the Phase 1 service area, the Village will look to optimize existing build-out by enabling some change of use and additional development all while remaining within the 60,000 GPD flow allocation to SCSD #24. In consideration of potential smart growth in the future, the Village could see the declining trend in year-round population slow and/or reverse. However, the Village does not currently have any specific plans for change of use and/or additional development, but will entertain proposals from property owners and developers after the Phase 1 service area is connected to SCSD #24 and actual sanitary flows are metered and compared to business occupancy records to confirm available additional capacity from what they are permitted to discharge to SCSD #24.

Suffolk County Water Authority (SCWA) water use records from 2014 and 2015 were utilized to calculate sanitary flow from the Phase 1 service area. As previously stated, the Phase 1 service area is comprised of one hundred fifty-six (156) Suffolk County tax lots; eighty-eight (88) are zoned for residential use, and

[5] Data was obtained from: http://www.usa.com/westhampton-beach-ny-population-and-races.htm

sixty-eight (68) are zoned for commercial or other uses. The commercial properties vary from low-flow dry uses, such as office space, retail and community services, to high-flow wet uses, such as restaurants. There are two (2) tax lots within the service area that are not projected to generate sanitary flow. These lots consist of paved parking lots located behind the building frontages along Main Street.

The average daily water consumption rates were assessed based on summer season and winter season months. The average daily summer usage was found to be approximately 60,000 GPD, and the average daily winter usage was found to be approximately 18,000 GPD. This type of data, if collected from a year-round residential development, would attribute the increased summer flow to irrigation and result in the winter data being selected to project sanitary flow. However, since the Phase 1 service area is comprised of a variety of uses, this type of correlation cannot be made. Due to the existing variable build-out of the Phase 1 service area, it can be inferred that the higher summer usage is attributed to a combination of irrigation, supplemental swimming pool make-up water, and increased business activity. It is also inferred that the lower winter usage is attributed to no irrigation, swimming pool closures, and relocation of seasonal residents to warm climate destinations during cold weather months. For these reasons, the summer usage has been selected as the conservative basis of design flow with the understanding that there will be capacity available for potential future build-out, new development and/or expansion of the Phase 1 service area infrastructure based on current zoning and available remaining capacity within the 60,000 GPD flow allocation granted by the Suffolk County Sewer Agency (SCSA).

## 3.0 EXISTING FACILITIES AND PRESENT CONDITION

Currently, no existing sanitary collection and conveyance infrastructure exists within the Phase 1 service area. Centralized sanitary collection and conveyance infrastructure will be required to collect and convey sanitary wastewater generated within the Phase 1 service area to SCSD #24. The planned collection and conveyance system will include two (2) drainage zones. One drainage zone will collect all wastewater generated by properties located south of Main Street (i.e. South Drainage Zone) and the other drainage zone will collect all wastewater generated by properties located north of Main Street (i.e. North Drainage Zone).

A force main will be constructed to convey all wastewater from the Phase 1 service area direct to the existing static screen at the SCSD #24 wastewater treatment plant. The force main route will run north along Mill Road, continue north along Oak Street and then Old Riverhead Road crossing under the street-level Long Island Railroad (LIRR) tracks, and then turn east along the south maintenance road, that parallels the LIRR tracks, and into the existing treatment plant building. The force main will tie into the existing 8-inch influent pipe to the existing static screen. Effluent from the static screen is discharged via gravity into a partitioned equalization basin with a total capacity of 42,000-gallons. Forward flow from the equalization basin is pumped to a constant head box that splits the flow evenly into two (2) parallel sequencing batch reactor tanks via adjustable v-notch weirs. A rectangular weir located in the splitter box is used to return excess flow back into the equalization basin. The existing biological sequencing batch reactor treatment process is provided by the AquaCAM-D® combination aerator/mixer/decanter equipment manufactured by Aqua-Aerobic Systems, Inc. a Metawater Company. Treated effluent exits the sequencing batch reactor tanks via gravity and flows across a 90-degree v-notch weir where the plant flow is metered prior to recharging to the ground via sub-surface leaching pools. Liquid waste sludge generated by the biological treatment process is stored in onsite aerated holding tanks before it is hauled offsite for disposal.

### 3.1 Permit Conditions and Effluent Discharge Limits

Each property that will be connected to the collection and conveyance infrastructure in the Phase 1 service area will be required to abide by the existing Sewer Use Ordinance that regulates wastewater discharged to SCSD #24 based on various chemical and physical characteristics. As previously stated, the existing SCSD #24 wastewater treatment plant, permitted for 100,000 GPD, has available capacity to readily accept

the 60,000 GPD flow that has been allocated to the Phase 1 service area due to current low in-District flows.

The in-District flows have historically averaged approximately 8,000 GPD for monitoring periods spanning May 28, 2015 and June 26, 2018. The historical maximum and minimum monthly average flows for this same monitoring period were reported to be 16,000 GPD and 5,000 GPD, respectively[6]. Therefore, expansion of the existing wastewater treatment plant and modifications to the SPDES permit will only become necessary when the actual flows at the facility reach 95% of its current 100,000 GPD permitted design flow. Since the existing treatment plant will not initially require expansion, the engineering design summary for those improvements has been separated into a stand-alone report, titled *Inc. Village of Westhampton Beach Sewer Collection and Conveyance System (Phase 1 Sewer Service Area) Connection to Suffolk County Sewer District No. 24, Volume 2.*

#### 3.1.1 Phase 1 Service Area Design Flow

As stated in Section 3.3, sanitary wastewater generation rates have been based on historical Suffolk County Water Authority (SCWA) summer use records from 2014 and 2015 and equal an average daily design flow of 60,000 GPD. The total average daily design flow for the Phase 1 service area has been further separated based on the two (2) drainage zones. The average daily design flow for the North Drainage Zone and South Drainage Zone are 11,300 GPD and 48,700 GPD, respectively.

## 4.0 DEFINITION OF THE PROBLEM

### 4.1 Public Health and Sanitation

All properties located within the Phase 1 service area discharge sanitary wastewater to onsite disposal systems comprised of either septic tanks and leaching pools or straight to leaching pools. Existing uses with kitchen facilities are also required to have grease traps located upstream of the onsite disposal systems. Like many other coastal communities located along the south shore of Long Island, existing build-out pre-dates current sanitary code requirements, which results in many of the existing onsite wastewater disposal systems not conforming to current standards and not functioning properly. Shallow groundwater conditions impact the ability for existing systems to accommodate current sanitary loads and require routine pump outs to avoid potential wastewater back-ups and overflows to the ground. Sea level rise will exacerbate the situation. These conditions also negate the potential for in-situ nitrogen reduction from bacterial consumption and vegetative root uptake, resulting in high concentration nitrogen and other constituent loading direct to groundwater.

Environmental contamination from continued use of existing conventional onsite sanitary wastewater disposal systems is of significant concern to the Village because of its negative impact on groundwater, Moniebogue Bay and other surrounding surface waters. Excessive nutrient loading to the Moniebogue Bay watershed has resulted in recurring algal blooms that are attributed to the red, brown and rust tides, which have become commonplace during warm weather months.

### 4.2 Reasonable Growth

In many cases, local regulatory agencies will not allow property owners to increase the capacity of their existing onsite systems since their existing build-out does not comply with current Suffolk County Sanitary Code. Areas within the Village where centralized sanitary collection, conveyance and treatment infrastructure will be installed will provide commercial property owners with the opportunity to moderately expand their existing businesses based on existing zoning while remaining within the total allocated flow to SCSD #24. Installation of collection and conveyance infrastructure within the Phase 1 service area will also result in improved public perception associated with the reduction of nuisance odor emissions that

[6] Data was obtained from: https://echo.epa.gov/effluent-charts#NY0226971

commonly occur during pump out events of existing onsite disposal systems, as well as the elimination of point sources from continuing to degrade the quality of groundwater and surrounding surface waters.

A revitalized commercial core and improved public perception within the Village of Westhampton Beach will most likely increase its desirability as a year-round destination for Village residents, Suffolk County residents with disposable incomes, and tourists. The potential expansion of businesses could provide additional employment opportunities and may result in increased property valuations. The increase in property valuation within the commercial core area will provide additional property tax revenues to the Village while the increased business activity will provide additional sales tax and income tax revenue, thus increasing the overall valuation of the Village of Westhampton Beach.

## 5.0 INC. VILLAGE OF WESTHAMPTON BEACH FINANCIAL STATUS

**Appendix A** presents the audited financial report from XX/XX/XXXX providing the financial position of the Inc. Village of Westhampton Beach. A more detailed financial profile of the Village will be provided as part of future applications for financial assistance.

## 6.0 EVALUATION OF DESIGN ALTERNATIVES

### 6.1 Collection and Conveyance System Considerations

To construct a collection and conveyance system within the Phase 1 service area, two (2) sewer technologies were considered, which included gravity sewers and low-pressure sewers. Each technology was evaluated based on field conditions where they could be cost effectively implemented while maintaining consideration to end-user preference, which resulted in two (2) collection and conveyance system layout alternatives to address the requirements set forth in this report. One of the layout alternatives considered a combination of gravity sewers and low-pressure sewers, while the other layout alternative considered a complete low-pressure sewer system. The following sections provide a general overview of the two (2) sewer technologies that were considered.

#### 6.1.1 Gravity Sewers

Gravity sewers are designed to use gravity to convey sanitary wastewater from its source to a treatment facility and/or intermediate pump station. Gravity sewers are typically configured with one main sewer line running the length of a street with branch laterals connecting each abutting property to the main line. Gravity sewers are appropriate for areas where the sewer pipe installation can follow the natural inclines of the terrain so that wastewater can flow to a treatment facility or intermediate pump station strategically located at a low point in the landscape. The gravity sewer main is situated such that wastewater flow follows the pitch of the pipe all the way to the treatment facility and/or intermediate pump station; the major advantage of this collection system option is its autonomous operation – once in place, the system does not require pumping or other energy inputs to operate. The slope of the gravity sewer must be steep enough to maintain a “self-cleansing velocity” to prevent clogging and decay of untreated wastewater within the sewer pipe. Periodic cleaning and pipe inspections are the only routine maintenance activities necessary.

Gravity sewers can also be installed in areas with varying terrain. This is accomplished by locating pump stations at intermediate low points to convey the collected wastewater to another gravity-flow segment of the collection system or directly to a treatment facility via submersible pump station and force main. These pump stations are powered by electricity and therefore provisions must be made so that continuous operation can be maintained during periods of power outage.

Installing gravity sewers in areas with varying terrain increases the capital and operational costs of the system, both due to the deep excavations that are typically required as well as the cost of constructing and operating intermediate pump stations. Another major disadvantage of gravity sewers is the need to open-cut the entire length of where the pipe installation is to occur, which can result in increased excavation, dewatering and site restoration costs. Additionally, gravity sewers do not have any integrated flow control

built-in to the drainage piping, which results in the piping to be oversized to accommodate the peak flow contributions associated with the diurnal water-use cycle. This characteristic of gravity sewers also impacts the size of the intermediate pump stations and other downstream infrastructure to ensure peak flow conditions are accommodated.

#### 6.1.2 Low Pressure Sewers

Low pressure sewer systems are a second option for the Village collection system. These systems are applicable in relatively flat areas or where the groundwater table is high. Low pressure sewer collection systems require each property within the collection area to have an on-site grinder pump station. All grinder pump stations are connected to a pressurized sewer main, which conveys wastewater generated within the collection area to either a treatment facility directly, a gravity sewer or to an intermediate centralized pump station.

The wastewater generated from each property flows by gravity into an onsite storage tank. The onsite storage tank is fitted with level sensing equipment and a submersible grinder pump. The grinder pumps are typically positive displacement type to achieve near constant flows at a wide range of head conditions that are prevalent in low pressure sewer collection systems. Some applications allow the use of submersible centrifugal pumps.

The grinder pumps are turned on when a pre-set fill level is sensed in the storage tank, and turned off after the storage tank is drained to a low-level condition. The pump cycles are controlled by the capacity of the onsite wet well, the real-time pressure within the common sewer main and the daily wastewater generation rate of the property.

The sewer mains used in a low-pressure collection system are sized based on flow and head requirements and to maintain a “self-cleansing velocity.” Typical low-pressure sewer main sizes range from 2-inch diameter to 6-inch diameter piping. Pipe materials used in these applications are typically fabricated from high density polyethylene (HDPE) resin; polyvinylchloride (PVC) pipe material is also used. Low pressure sewers can be installed at shallow depths and do not need to follow the natural grade of the terrain.

Directional drilling can be used to install low pressure sewers, which is advantageous in developed areas and locations with shallow depths to groundwater to minimize road excavation, restoration, and dewatering. Peak flow conditions typical of gravity collection systems are not prevalent in a low-pressure sewer network. Flow equalization of the diurnal water use pattern occurs within the low-pressure grinder station on each property; the maximum flow from a low-pressure sewer system is a function of head loss within the system, which limits the number of pumps that can simultaneously operate.

Typical low-pressure sewer collection systems require the installation of at least one centralized pump station. More than one station may be required depending on size and topography of the collection area. The function of this pump station is like that used in a gravity collection system. However, some low-pressure collection systems can be piped directly to a treatment facility without the need for an intermediate pump station if the system head and flow conditions remain within the operating range of the onsite grinder stations.

Low pressure sewer systems typically become less and less cost effective in sewer districts that convey large volumes of flow. These situations result in the need to install numerous parallel low-pressure sewer mains to meet the head and scouring requirements of the system; intermediate pump stations also become required in these instances. Low pressure sewers are typically used in hybrid configurations with gravity sewers when the service areas become large scale, requiring numerous intermediate pump stations.

### 6.2 Alternative No. 1

The first alternative layout considers a combination of gravity and low-pressure sewers to collect wastewater generated within the Phase 1 service area (i.e. North Drainage Zone and South Drainage

Zone). Flow generated within each drainage zone would be collected by two (2) independent gravity sewer interceptors routed behind the storefronts that abut Main Street, through a combination of municipally owned parking lots, rights-of-ways and private utility easements. The high-density residential properties, located in the South Drainage Zone along Library Avenue and Mitchell Road, will connect to the south gravity interceptor via two separate low-pressure sewer mains down each right-of-way. No low-pressure sewer mains are planned for the North Drainage Zone under this alternative. The grinder pump stations required to connect the high-density residential properties to the low-pressure sewer mains will be the responsibility of the municipality for ownership, installation and long-term operation and maintenance. Therefore, all low-pressure grinder pump stations would be municipally owned and maintained, thereby requiring blanket access agreements with each property owner to facilitate installation and future access for operations staff to perform routine maintenance and emergency repair services whenever needed.

Each gravity sewer interceptor will drain to a wastewater pump station centrally located within the respective drainage zone. Both pump stations will be constructed in municipally-owned parking lots. The pump station serving the South Drainage Zone will discharge flow to the North Drainage Zone gravity interceptor, and the pump station located in the North Drainage Zone will convey the total flow from the Phase 1 service area to SCSD #24.

The 48,800 GPD total average daily design flow for the South Drainage Zone is comprised of a combination of gravity sewer and low-pressure sewer connections. Approximately 16,300 GPD of the total average daily design flow for the South Drainage Zone is attributed to properties connecting direct to the gravity sewer interceptor, while the remaining 32,400 GPD of the total average daily design flow is attributed to properties connecting via low-pressure sewer. The low-pressure sewer connections require two separate low-pressure sewer mains, one routed along Mitchell Road and the other routed along Library Avenue. The individual low-pressure sewer connections are based on individual simplex grinder stations installed for the forty-nine (49) condominium units located at 30 Mitchell Road, the three (3) condominium units located at 27 Mitchell Road, the seven (7) condominium units located at 25 Mitchell Road, and the four (4) condominium units located at 23 Library Avenue. An additional seven (7) duplex grinder stations will be used to connect the multi-unit residential buildings located at 35 and 32 Library Avenue. Therefore, a total of 63 simplex grinder stations and 7 duplex grinder stations will be required under this alternative.

The peak design flow associated with the gravity sewer connections is calculated based on both Suffolk County Department of Public Works (SCDPW) design standards and the Recommended Standards for Wastewater Facilities (10 State Standards) using the formula provided below.

$$PF = \frac{18 + \sqrt{P}}{4 + \sqrt{P}}$$

*$P$ = population in thousands*

10 State Standards identifies the equivalent service area population based on a flow factor of 100 gallons/capita/day. However, Suffolk County design standards require a flow factor of 75 gallons/capita/day to be used on projects under their jurisdiction. Both flow factors account for normal infiltration expected from systems built with modern construction methods and materials. As such, the peak hourly flows for the North Drainage Zone is calculated to be 4.19 times the average daily design flow and the South Drainage Zone is calculated to be 4.13 times the average daily design flow, based on the Suffolk County equivalent population flow factor of 75 gallons/capita/day. Therefore, the peak hourly design flow for gravity sewer connections to the North Drainage Zone and South Drainage Zone are 33 gallons per minute (gpm) and 47 gpm, respectively.

The peak design flow associated with the low-pressure sewer connections is calculated based on an empirical equation developed to determine the maximum number of simultaneous pump operations for all

grinder stations connected along the sewer main, also known as the Simplified Equation or Rational Method. The Simplified Equation is referenced from the US handbook EPA Manual 625/1-91/024, and is deemed as an acceptable method to project peak design flows from low-pressure sewer systems. The Simplified Equation is provided below.

$$Q = AN + B$$

*Q = peak design flow (gpm)*

*A = A coefficient selected by the engineer, typically 0.5 which includes the probability for number of pumps running simultaneously*

*N = Flow per EDUs (gpd/EDU)*

*B = A factor selected by the engineer based on pump flow, 11*

Utilizing the above method in conjunction with a 300 GPD per EDU (equivalent dwelling unit) flow factor, the peak design flow from the low-pressure sewer main along Mitchell Road is 36 gpm and the peak design flow from the low-pressure sewer main along Library Avenue is 40 gpm. Therefore, the total peak design flow for the South Drainage Zone is 123 gpm (i.e. 47 gpm from gravity sewer + 36 gpm from Mitchell Road LPS + 40 gpm from Library Avenue LPS), and the total peak design flow for the North Drainage Zone is 156 gpm (i.e. 33 gpm from gravity sewer + 123 gpm from South Drainage Zone).

### 6.2.1 Phase 1 Service Area Sewer Design

Due to the relatively low average daily and peak design flows for each drainage zone, the gravity sewer mains will be comprised of 8-inch diameter DR-18 PVC pipe, which is the smallest diameter allowable by code. The proposed gravity sewer mains will also be installed at minimum slopes of no less than 0.4%. At peak design flows for each drainage zone, an 8-inch diameter DR-18 PVC gravity sewer installed at the minimum slope of 0.4% will be flowing with 60% of excess capacity at velocities above the minimum 2-feet per second required for scouring. The gravity sewer network in the South Drainage Zone will consist of approximately 1,450 linear feet of 8-inch diameter PVC pipe and fifteen (15) manholes. The gravity sewer network in the North Drainage Zone will consist of approximately 2,310 linear feet of 8-inch diameter DR-18 PVC pipe and twenty (20) manholes. Modifications to existing roadway drainage will also be required within the Glover's Lane right-of-way in the North Drainage Zone to facilitate installation of the gravity sewer in that area. Dewatering is expected during the installation of the gravity sewer networks.

The low-pressure sewer connections will require a 2-inch diameter HDPE DR-11 low-pressure sewer main in Mitchell Road and a 3-inch diameter HDPE DR-11 low-pressure sewer main in Library Avenue. The proposed low-pressure sewer mains will be installed at a minimum depth of 4-feet below grade and each will discharge to a manhole located where the gravity sewer main crosses Mitchell Road and Library Avenue.

The peak velocities achieved within the low-pressure sewer mains in Mitchell Road and Library Avenue will be 3.99 feet per second and 2.04 feet per second, respectively. Both low-pressure sewer mains will achieve the minimum recommended scouring velocity of 2 feet per second. The peak operating pressure within the Mitchell Road and Library Avenue low-pressure sewer mains will be approximately 45 feet and 12 feet, respectively, which is within the 180 feet head pressure rating of the commercially available low-pressure positive displacement grinder pumps used in these types of sewer systems. The head pressures assume a maximum static head of 6 feet for the Library Avenue low-pressure sewer main and 11 feet for the Mitchell Road low-pressure sewer main.

All low-pressure sewer connections will be small diameter DR-11 HDPE ranging between 1-1/4 to 2 inches in diameter. Each connection will have a lateral assembly kit comprised of a stainless-steel ball and check valve with valve box to grade. The diameter of each connection will be based on the design flow of the

connecting property. Final hook-up and design for each property connection will be the responsibility of the municipality.

All low-pressure sewer connections will require an application be made to Suffolk County Department of Health Services (SCDHS). The application must include plans detailing all components of the system installation including but not be limited to: gravity piping from the buildings to the low-pressure sewer grinder stations, piping from the on-site pump station to the LPS house connection stub, location of the pump station, details of the pump station construction, ballast design, electrical installations, a properly sized portable emergency generator connection fitting for commercial properties, and house connection installation details. Sampling of on-site sanitary and details of the abandonment of existing on-site treatment systems are the responsibility of each property owner. Installation, operation and maintenance of the gravity discharge lines to the pump station(s) within each property and pretreatment systems such as grease traps are also the responsibility of the property owner.

Suffolk County requires the existing sanitary leaching system and all Underground Injection Control (UIC) leaching structures at commercial properties be properly abandoned in accordance with Suffolk County Department of Health Services (SCDHS) Office of Pollution Control Article 12 SOP 9-95 "Pump out and Soil Cleanup Criteria." This process is also the responsibility of the commercial property owner. To reduce the volume of runoff generated by each property onto municipal roadways and properties, the Village would like the County agencies to consider allowing the existing disposal systems to be repurposed for storm water drainage. The details and procedures associated with this permitting/approval process will be discussed further during the detailed design phase of this project.

Both drainage zones will also require an area of approximately 40 feet by 50 feet to site a centrally located pump station. The pump station site for the North Drainage Zone is in the southeast corner of the municipal parking lot located at the north end of Glovers Lane. The pump station site for the South Drainage Zone is along the east side of the municipal parking lot located off Parlato Drive. Each pump station site will require a perimeter fence with privacy slats, asphalt pavement over all exposed grade, and exterior lighting. Evergreen trees will also be required along the exterior perimeter of the fence to provide screening.

Both pump stations will be a wet pit type utilizing submersible explosion proof pumps in a precast concrete circular wet well. In accordance with SCDPW standards, the pump station will include a separate valve pit, control building and standby emergency power generator. The control panel, electrical panels, alarm dialer, backflow prevention device and automatic emergency power transfer switch will be installed above ground in a 12.5' x 17.5' prefabricated precast concrete building that will be located adjacent to the wet well. Space will be provided within the building to allow for installation of a potassium permanganate chemical feed system for odor control.

The peak design flow for the pump station in the North Drainage Zone will be 156 gpm and the peak design flow for the pump station in the South Drainage Zone will be 123 gpm. The selected pump rates for the North Drainage Zone and South Drainage Zone are 200 gpm and 123 gpm, respectively. The pump rates have been selected to optimize efficiency while maintaining minimum scouring velocity through force main sizes of 6-inch diameter DR-18 PVC for the North Pump Station and 4-inch diameter DR-18 PVC for the South Pump Station. The interior piping at each wet well between the pump discharge elbows and effluent force main from valve/flow meter pit will be 4-inch diameter Class 53 cement-lined ductile iron pipe, which will transition to DR-18 PVC downstream of each pump station site. A flow meter will only be installed at the pump station in the North Drainage Zone to meter the total flow conveyed from the Phase 1 service area to SCSD #24.

Pump operation will be controlled at each pump station via pressure transducer in the wet well to monitor liquid level connected to a Multismart® controller. Backup high and low-level float switches with analog by-pass controls will also be provided. An auto dialer alarm system with an uninterruptable backup power source will be provided to maintain monitoring of power failure, wet well high level, wet well low level, pump

failure, motor over-temperature, seal leak, Multismart® controller by-pass mode, generator running, generator failure, H-O-A switch not in Auto, and unauthorized entry to the control building.

### 6.2.2 LPS System Grinder Pump Station Design

Each property connected to a low-pressure main will require the installation of a low-pressure sewer grinder station. The size of each LPS pump station is based on the anticipated wastewater generation from that parcel. Two manufacturers of LPS pump stations are E-One and Flygt. Projected wastewater flows indicate each property will require one of the pump stations listed below.

| Type | Connection Design Flow (gpd) | E-One Pump | | | FLYGT | | |
|---|---|---|---|---|---|---|---|
| | | Pump Station Model | Storage Capacity (gal.) | Operating Range (gal.) | Pump Station Model | Storage Capacity (gal.) | Operating Range (gal.) |
| Simplex | 0 – 1,500 | *DH-151* | *150* | *23* | *Compit 460* | *220* | *18* |
| Duplex | 0 – 5,000 | *DH-272* | *275* | *48* | *Compit 2000* | *500* | *38* |

Each pump station assembly includes the tank, cover, pumps and supply cables. The tanks are constructed of molded HDPE. If low-pressure sewer grinder pump stations are located within a flood zone, they will be provided with a water tight cover. Each station will be provided with an anti-floatation concrete ballast and fitted with the necessary quantity of semi-positive displacement 1HP, 240V, 60Hz, 1-phase pumps. The pump controls are housed in a NEMA 4X enclosure and include a connection to a portable emergency power generator. As per NFPA 820 individual residential pump stations are not required to be explosion proof. The purchase and installation of each station is the responsibility of the Village. The emergency power generators will be the responsibility of Suffolk County Department of Public Works. **Appendix B** includes catalog cut sheets for the recommended low-pressure sewer grinder pump stations manufactured by E-One.

### 6.2.3 North Drainage Zone Pump Station Design

A minimum wet well capacity of 389 gallons is required for the design peak flow. The proposed wet well has been sized for the influent peak design flow of 156 gallons per minute (gpm). The wet well will be 8-foot diameter and have a total exterior sidewall depth of 14.96 feet. Lockable aluminum hatches with fall protection gratings will provide secure access to the wet well. The ventilation blower and the pump station and valve pit lights will be controlled by limit switches on the access hatch doors. The design cycle time between pump starts is approximately 12.7 minutes, and the normal operating depth in the wet well is 1.04 feet (12.5 inches) between pump shut off and lead pump on levels. Table 6.2.1 summarizes the water elevation set points for the wet well. A section view of the pump station is provided as **Figure 2**.

**TABLE 6.2.1 – Wet Well Design Elevations (Alt. No. 1 – North Drainage Zone)**

| Level | Elevation |
|---|---|
| Top Slab | 9.08 |
| Grade | 8.58 |
| Influent Invert | 0.45 |
| High Level Alarm | -0.56 |
| Lag Pump On | -1.06 |
| Lead Pump On | -2.10 |
| Pump Shut Off | -3.13 |
| Low Level Alarm | -3.63 |
| Pump Station Floor | -5.13 |
| Bottom Wet Well Structure | -6.38 |

Either a diesel or natural gas fueled stand-by generator in a sound attenuating enclosure will provide emergency power. If a diesel generator is selected, fuel will be stored in an above-ground double walled tank sized to provide a 3-day run time for the generator under pump station electric load.

Valves will be installed in a separate below grade valve vault directly adjacent to each wet well. The check valves will be air cushioned type weight and lever. Isolation valves will be ¼ turn plug with manual mechanical/lever operators. A lockable aluminum access hatch will provide secure access to the valves in the vault. An explosion proof light will be installed in the vault.

A pit with a magnetic flow meter will be located downstream of the valve vault. A lockable aluminum access hatch will provide secure access to the meter in the pit. A digital chart recorder will be in the control building.

A connection with rapid connection capabilities and appropriate valving will be provided to allow the connection of a portable pump to the force main.

Below is a detailed design summary for the North Drainage Zone pump station design:

A. Average Daily Design Flow: 60,000 GPD

B. Peak Design Flow*:*

Utilizing historic SCWA flow records:

224,187 GPD

(156 gpm)

C. <u>Well Capacity</u>

Provide operating range for consistent on-off cycles of pumps and eliminate settling of solids or extensive detention time. Design capacity based on average daily flow of 60,000 GPD (42 gpm).

1. Provide an average fill time of 9.3 minutes.

2. Peak fill rate of 156 gpm.

3. Pump rate of 200 gpm

4. Wet Well Operational Capacity = Selected fill time x Peak Flow fill rate/4 starts per hour.

$$= \frac{10 \times 156}{4} = 389 \text{ gallons}$$

5. Wet Well Area: 8 Ft. Inside Diameter

   a. Capacity: $(8/2)^2 \times \pi \times 7.48$ gal/cu.ft. = 376 gals/ft.

   b. Operating Range: 389/376 = 1.04 feet

   c. At average daily flow of 60,000 gpd (42 gpm):

   d. Pump Off Cycle = Wet Well Capacity/Average Daily Flow

      $t_{off}$ = 389/42 = 9.3 minutes

   e. Pump On Cycle = Wet Well Capacity + (ADF x t)

      $$t_{on} = \frac{389 + (42\ t_{on})}{200}$$

      $t_{on}$ = 3.9 minutes

   f. Total time between pump starts = 9.3 + 3.9 = 13.2 minutes

D. Wet Well Ventilation: Sized for 30 air changes per hour

1. Wet Well Volume = 773 cu. ft.

2. Ventilation Rate = $\frac{773 \text{ cu. ft} \times 30}{60 \text{ min/hr}}$ = 387 cfm

### 6.2.4 North Drainage Zone Force Main Design

The force main will be comprised of 4-inch diameter Class 53 cement lined ductile iron and 6-inch diameter DR-18 PVC pipe. The force main will be designed to meet SCDPW requirements for pressure testing at 200 psi. The overall length of the force main conveying flow from the North Drainage Zone pump station to SCSD #24 is approximately 12,500 linear feet (approximately 2.37 miles). Parallel pipes will be installed to provide operational flexibility and add capacity should the need arise in the future. The force main pipe is proposed to be installed via combination of open cut trench and horizontal directional drill methods to minimize traffic disruptions and roadway restoration limits. Road opening permits will be obtained for the portions of the force main located within the rights-of-ways. Easements will be obtained as necessary upon determination of final force main route during the detailed design phase of this project.

Cleanouts will be installed at a maximum distance apart of 400 feet along the force main and at turns greater than 45 degrees. Drainage manhole will be located at force main low points. Air relief valves will be located at force main high points to prevent air locking and to admit air when the line is being drained or a vacuum condition occurs. Thrust blocks and retainer glands will be located at every bend where fittings are installed.

Below is a detailed design summary for the North Drainage Zone force main design:

A. Pipe Material: Class 53 cement-lined ductile iron (CLDI) 4-inch diameter and DR-18 PVC 6-inch diameter

B. Velocity at 200 gpm: 4.72 fps in Class 53 CLDI pipe, 2.20 fps in DR-18 PVC pipe

C. Hazen Williams C-Factor: 120

D. Force Main Length (Preliminary): 12,500 feet (excludes discharge piping)

E. System Head at 200 gpm:

1. Static Head:

a. Pump Shut-Off Level: -3.13 ft

b. Force Main High Point: 45.00 ft

c. Static Head = 45.00 ft – (-3.13) ft

= 48.13 ft

2. Pipe Loss = $\left(\frac{100}{C}\right)^{1.85} \times 0.002083L \times Q^{1.85} \div d^{4.8655}$

$$\left(\frac{100}{120}\right)^{1.85} \times 0.002083(12{,}500\text{ ft}) \times (156\text{ gpm})^{1.85} \div (4.27\text{ in})^{4.8655} + \left(\frac{100}{120}\right)^{1.85} \times 0.002083(35\text{ ft}) \times (156\text{ gpm})^{1.85} \div (4.16\text{ in})^{4.8655} =$$

= 51.94 ft

3. Minor Pipe Loss:

| | QUANTITY | k | Kt |
|---|---|---|---|
| Exit | 1 | 1 | 1 |
| Check Valve | 1 | 0.8 | 0.8 |
| Plug Valve | 1 | 0.63 | 0.63 |
| Pressure Gauge | 1 | 0.5 | 0.5 |
| 45° Elbow | 14 | 0.22 | 3.08 |
| 22.5° Elbow | 2 | 0.11 | .22 |
| Cleanouts | 16 | 0.28 | 4.48 |
| | | **Total** | **9.71** |

4. Head Loss = $\frac{V^2}{64.4} \times Kt$

$= \frac{(3.49\ \text{ft/s})^2}{64.4} \times 9.71$

= 1.84 ft

5. TDH = 48.13 ft + 51.94 ft + 1.84 ft

= 101.91 ft

Two pumps, one duty and the other as an online backup with automatic alternation, will be installed. Each pump will be rated to provide 200 gpm at a total dynamic head of 101.91 feet, with a static head of 48.13 feet. Xylem pump Model Number NP 3153 HT 3~ 454 with a 250-mm impeller and 15.0 HP motor is the preliminary selection for this application. Catalog cuts for the proposed pumps are presented in **Appendix B.** This pump will provide conveyance for the peak design flow. To reduce the accumulation of solids in the wet well, a mix flush valve will be provided on one of the pumps. The pumps will be removable using a hoist and gantry without the need for personnel to enter or to dewater the wet well.

### 6.2.5 South Drainage Zone Pump Station Design

A minimum wet well capacity of 307 gallons is required for the design peak flow. The proposed wet well has been sized for the influent peak design flow of 123 gallons per minute (gpm). The wet well will be 8-foot diameter and have a total exterior sidewall depth of 18.47 feet. Lockable aluminum hatches with fall protection gratings will provide secure access to the wet well. The ventilation blower and the pump station and valve pit lights will be controlled by limit switches on the access hatch doors. The design cycle time between pump starts is approximately 14.1 minutes, and the normal operating depth in the wet well is 0.82 feet (10 inches) between pump shut off and lead pump on levels. Table 6.2.2 summarizes the water elevation set points for the wet well. A section view of the pump station is provided as **Figure 3**.

**TABLE 6.2.2 – Wet Well Design Elevations (Alt. No. 1 – South Drainage Zone)**

| Level | Elevation |
|---|---|
| Top Slab | 8.06 |
| Grade | 7.56 |
| Influent Invert | -4.02 |
| High Level Alarm | -5.02 |
| Lag Pump On | -5.52 |
| Lead Pump On | -6.34 |
| Pump Shut Off | -7.16 |
| Low Level Alarm | -7.66 |
| Pump Station Floor | -9.16 |
| Bottom Wet Well Structure | -10.41 |

Either a diesel or natural gas fueled stand-by generator in a sound attenuating enclosure will provide emergency power. If a diesel generator is selected, fuel will be stored in an above-ground double walled tank sized to provide a 3-day run time for the generator under pump station electric load.

Valves will be located in a separate below grade valve vault directly adjacent to each wet well. The check valves will be air cushioned type weight and lever. Isolation valves will be ¼ turn plug with manual mechanical/lever operators. A lockable aluminum access hatch will provide secure access to the valves in the vault. An explosion proof light will be installed in the vault.

A connection with rapid connection capabilities and appropriate valving will be provided to allow the connection of a portable pump to the force main.

Below is a detailed design summary for the North Drainage Zone pump station design:

A. Average Daily Design Flow: 48,700 GPD

B. Peak Design Flow*:*

Utilizing historic SCWA flow records:

176,835 GPD

(123 gpm)

C. <u>Well Capacity</u>

Provide operating range for consistent on-off cycles of pumps and eliminate settling of solids or extensive detention time. Design capacity based on average daily flow of 60,000 gpd (42 gpm).

6. Provide an average fill time of 9.1 minutes.

7. Peak fill rate of 123 gpm.

8. Pump rate of 123 gpm

9. Wet Well Operational Capacity = Selected fill time x Peak Flow fill rate/4 starts per hour.

$$= \frac{10 \times 123}{4} = 307 \text{ gallons}$$

10. Wet Well Area: 8 Ft. Inside Diameter

g. Capacity: $(8/2)^2 \times \pi \times 7.48$ gal/cu.ft. = 376 gals/ft.

h. Operating Range*:* 307/376 = 0.82 feet

i. At average daily flow of 48,700 GPD (34 gpm):

j. Pump Off Cycle = Wet Well Capacity/Average Daily Flow

$t_{off}$ = 307/34 = 9.1 minutes

k. Pump On Cycle = Wet Well Capacity + (ADF x t)

$$t_{on} = \frac{307 + (34\ t_{on})}{123}$$

$t_{on}$ = 5.0 minutes

l. Total time between pump starts = 9.1 + 5.0 = 14.1 minutes

D. Wet Well Ventilation: Sized for 30 air changes per hour

3. Wet Well Volume = 928 cu. ft.

4. Ventilation Rate = $\frac{928 \text{ cu. ft} \times 30}{60 \text{ min/hr}}$ = 464 cfm

6.2.6 South Drainage Zone Force Main Design

The force main will be comprised of 4-inch diameter Class 53 cement lined ductile iron and DR-18 PVC pipe. The force main will be designed to meet SCDPW requirements for pressure testing at 200 psi. The overall length of the force main conveying flow from the South Drainage Zone pump station to the gravity sewer interceptor in the North Drainage Zone is approximately 1,200 linear feet (approximately 0.2 miles). The single force main pipe is proposed to be installed via open cut trench since it will follow the same route as the proposed gravity sewers. The section of the force main pipe that crosses Main Street at the Moniebogue Lane/Sunset Avenue intersections will be installed as part of the Main Street roadway and utility improvements project currently being administered by the Village to avoid the need to disrupt traffic on Main Street during the Phase 1 service area construction. Road opening permits will be obtained for the portions of the force main located within the rights-of-ways. Easements will be obtained as necessary upon determination of final force main route during the detailed design phase of this project.

Cleanouts will be installed at a maximum distance apart of 400 feet along the force main and at turns greater than 45 degrees. Drainage manhole will be located at force main low points. Air relief valves will be located at force main high points to prevent air locking and to admit air when the line is being drained or a vacuum condition occurs. Thrust blocks and retainer glands will be located at every bend where fittings are installed.

Below is a detailed design summary for the North Drainage Zone force main design:

A. Pipe Material: Class 53 cement-lined ductile iron 4-inch diameter and (CLDI) and DR-18 PVC 4-inch diameter

B. Velocity at 123 gpm: 2.90 fps in Class 53 CLDI pipe, 2.75 fps in DR-18 PVC pipe

C. Hazen Williams C-Factor: 120

D. Force Main Length (Preliminary): 1,200 feet (excludes discharge piping)

E. System Head at 123 gpm:

6. Static Head:

d. Pump Shut-Off Level: -7.16 ft

e. Force Main High Point: 6.00 ft

f. Static Head = 6.00 ft – (-7.16) ft

= 13.16 ft

7. Pipe Loss = $\left(\frac{100}{C}\right)^{1.85} \times 0.002083L \times Q^{1.85} \div d^{4.8655}$

$$\left(\frac{100}{120}\right)^{1.85} \times 0.002083(1{,}200\text{ ft}) \times (123\text{ gpm})^{1.85} \div (4.27\text{ in})^{4.8655} + \left(\frac{100}{120}\right)^{1.85} \times 0.002083(35\text{ ft}) \times (123\text{ gpm})^{1.85} \div (4.16\text{ in})^{4.8655} =$$

= 11.57 ft

8. Minor Pipe Loss:

| | QUANTITY | k | Kt |
|---|---|---|---|
| Exit | 1 | 1 | 1 |
| Check Valve | 1 | 0.8 | 0.8 |
| Plug Valve | 1 | 0.63 | 0.63 |
| Pressure Gauge | 1 | 0.5 | 0.5 |
| 45° Elbow | 14 | 0.22 | 3.08 |
| Cleanouts | 16 | 0.28 | 4.48 |
| | | **Total** | **9.71** |

9. Head Loss = $\frac{V^2}{64.4} \times Kt$

$= \frac{(3.49\text{ ft/s})^2}{64.4} \times 6.19$

= 1.17 ft

10. TDH = 13.16 ft + 11.57 ft + 1.17 ft

= 24.73 ft

Two pumps, one duty and the other as an online backup with automatic alternation, will be installed. Each pump will be rated to provide 123 gpm at a total dynamic head of 24.73 feet, with a static head of 13.16 feet. Xylem pump Model Number NP 3102 SH 3~ 455 with a 150-mm impeller and 5.0 HP motor is the preliminary selection for this application. Catalog cuts for the proposed pumps are presented in **Appendix B**. This pump will provide conveyance for the peak design flow. To reduce the accumulation of solids in the wet well, a mix flush valve will be provided on one of the pumps. The pumps will be removable using a hoist and gantry without the need for personnel to enter or to dewater the wet well.

### 6.3 Alternative No. 2

The second alternative layout considers using low-pressure sewers to collect and covey wastewater generated within the Phase 1 service area (i.e. North Drainage Zone and South Drainage Zone) to SCSD #24. Flow generated within each drainage zone would be collected by a dedicated low-pressure sewer main that would transition to a single 6-inch diameter force main at the north end of Glovers Lane for conveyance to SCSD #24. The low-pressure sewer mains and combined force main would follow the same route as the gravity sewer layout and the North Drainage Zone force main route identified under Alternative No. 1. Like Alternative No. 1, all low-pressure grinder pump stations would be municipally owned and maintained, thereby requiring blanket access agreements with each property owner to facilitate installation

and future access for operations staff to perform routine maintenance and emergency repair services whenever needed.

The South Drainage Zone low-pressure sewer system will accommodate 48,700 GPD of the total average daily flow and the North Drainage Zone will accommodate 11,300 GPD of the total average daily design flow. The peak design flow associated with the low-pressure sewer connections is calculated based on an empirical equation developed to determine the maximum number of simultaneous pump operations for all grinder stations connected along the sewer main, also known as the Simplified Equation or Rational Method. The Simplified Equation is referenced from the US handbook EPA Manual 625/1-91/024, and is deemed as an acceptable method to project peak design flows from low-pressure sewer systems. The Simplified Equation is provided below.

$$Q = AN + B$$

*Q = peak design flow (gpm)*

*A = A coefficient selected by the engineer, typically 0.5 which includes the probability for number of pumps running simultaneously*

*N = Flow per EDUs (gpd/EDU)*

*B = A factor selected by the engineer based on pump flow, 11*

Utilizing the above method in conjunction with a 300 GPD per EDU (equivalent dwelling unit) flow factor, the peak design flow from the low-pressure sewer main serving the South Drainage Zone is 92 gpm, and the peak design flow from the low-pressure sewer main serving the North Drainage Zone is 30 gpm. Therefore, the total combined peak design flow at the point where both low-pressure sewer mains transition to a single force main is 122 gpm.

### 6.3.1 Phase 1 Service Area Sewer Design

The low-pressure sewer networks will be comprised of 3-inch and 4-inch diameter high density polyethylene (HDPE) DR-11 pipe to achieve the recommended scouting velocity range 2 feet per second to 15 feet per second the greatest extent feasible within the sewer system. This velocity range is required to reduce solids deposition and potential clogging during initial low flow conditions and minimize head losses during maximum wastewater flows. The velocities are an important design consideration for the low-pressure collection system to limit maintenance and minimize head loss.

Locations where scouring velocities typically are not seen at the terminal ends of pipe runs will be routinely monitored and flushed to minimize the risk of clogs and stagnation within the system. The proposed low-pressure sewer mains will be installed at a minimum depth of 4-feet below grade and will transition to one 6-inch diameter HDPE DR-11 force main at the north end of Glovers Lane to convey the full design flow to the wastewater treatment plant in SCSD #24. A flow meter will be installed on the force main at the SCSD #24 wastewater treatment facility upstream of the discharge location to meter the total flows conveyed by the Phase 1 service area.

All low-pressure sewer connections will be small diameter DR-11 HDPE ranging between 1-1/4 to 2 inches in diameter. Each connection will have a lateral assembly kit comprised of a stainless-steel ball and check valve with valve box to grade. The diameter of each connection will be based on the design flow of the connecting property. Final hook-up and design for each property connection will be the responsibility of the municipality.

All low-pressure sewer connections will require an application be made to Suffolk County Department of Health Services (SCDHS). The application must include plans detailing all components of the system installation including but not be limited to: gravity piping from the buildings to the low-pressure sewer grinder stations, piping from the on-site pump station to the LPS house connection stub, location of the pump station, details of the pump station construction, ballast design, electrical installations, a properly sized portable emergency generator connection fitting for commercial properties, and house connection installation details. Sampling of on-site sanitary and details of the abandonment of existing on-site treatment systems are the responsibility of each property owner. Installation, operation and maintenance of the gravity discharge lines to the pump station(s) within each property and pretreatment systems such as grease traps are also the responsibility of the property owner.

Suffolk County requires that the existing sanitary leaching system and all Underground Injection Control (UIC) leaching structures at commercial properties be properly abandoned in accordance with Suffolk County Department of Health Services (SCDHS) Office of Pollution Control Article 12 SOP 9-95 "Pump out and Soil Cleanup Criteria." This process is also the responsibility of the commercial property owner. To reduce the volume of runoff generated by each property onto municipal roadways and properties, the Village would like the County agencies to consider allowing the existing disposal systems to be repurposed for storm water drainage. The details and procedures associated with this permitting/approval process will be discussed further during the detailed design phase of this project.

### 6.3.2 LPS Grinder Pump Station Design

Each property requires the installation of a low-pressure sewer grinder station. The size of each LPS pump station is based on the anticipated wastewater generation from that parcel. Two manufacturers of LPS pump stations are E-One and Flygt. Projected wastewater flows indicate each property will require one of the pump stations listed in below.

| Type | Connection Design Flow (gpd) | E-One Pump | | | FLYGT | | |
|---|---|---|---|---|---|---|---|
| | | Pump Station Model | Storage Capacity (gal.) | Operating Range (gal.) | Pump Station Model | Storage Capacity (gal.) | Operating Range (gal.) |
| Simplex | 0 – 1,500 | *DH-151* | *150* | *23* | *Compit 460* | *220* | *18* |
| Duplex | 0 – 5,000 | *DH-272* | *275* | *48* | *Compit 2000* | *500* | *38* |

Each pump station assembly includes the tank, cover, pumps and supply cables. The tanks are constructed of molded HDPE. If low-pressure sewer grinder pump stations are located within a flood zone, they will be provided with a water tight cover. Each station will be provided with an anti-floatation concrete ballast and fitted with the necessary quantity of semi-positive displacement 1HP, 240V, 60Hz, 1-phase pumps. The pump controls are housed in a NEMA 4X enclosure and include a connection to a portable emergency power generator. As per NFPA 820 individual residential pump stations are not required to be explosion proof. The purchase and installation of each station is the responsibility of the Inc. Village of Westhampton Beach. The emergency power generators will be the responsibility of Suffolk County Department of Public Works. **Appendix B** includes catalog cut sheets for the recommended low-pressure sewer grinder pump stations manufactured by E-One.

### 6.3.3 LPS System Design

The preliminary layout for the South Drainage Zone low-pressure sewer system assumes sixty-three (63) simplex grinder stations, twenty-five (25) duplex grinder stations, approximately 2,800 linear feet of 4-inch diameter HDPE DR-11 sewer main, 12,500 linear feet of 6-inch diameter DR-18 PVC force main, a static

head of approximately 44.00 feet, and a peak design flow equal to 122 gpm. The preliminary layout for the North Drainage Zone low-pressure sewer system assumes one (1) simplex grinder station, eighteen (18) duplex grinder stations, approximately 2,000 linear feet of 3-inch diameter HDPE DR-11 sewer main, 12,500 linear feet of 6-inch diameter DR-18 PVC force main, a static head of approximately 44.00 feet, and a peak design flow equal 122 gpm. The final quantity and capacity of grinder stations will be determined during the detailed design phase of the project, when existing onsite sanitary disposal system configurations are confirmed via utility survey and field reconnaissance. Applying the SCDPW standard C-factor of 120 to both low-pressure sewer configurations, the peak operating pressure within the South Drainage Zone is calculated to be approximately 116 feet (50 psi) and the peak operating pressure within the North Drainage Zone is calculated to be approximately 93 feet (40 psi).

Since both peak operating pressures are less than the 180 feet (80psi) head pressure rating of the commercially available low-pressure positive displacement grinder pumps used in these types of sewer systems, a centrally located pump station is not required to convey the flow to the SCSD #24 wastewater treatment plant. The peak operating pressures for each drainage zone account for the total dynamic head loss (TDH) of the system, based on the low-pressure sewer and combined force main configuration and associated flow contributions.

As previously stated, the combined force main will be comprised of a 6-inch diameter DR-18 PVC pipe. The force main design will meet SCDPW requirements for pressure testing at 200 psi. The force main pipe is proposed to be installed via combination of open cut trench horizontal directional drill methods to minimize traffic disruptions and roadway restoration limits. Road opening permits will be obtained for the portions of the force main located within the rights-of-ways. Easements will be obtained as necessary upon determination of final force main route during the detailed design phase of this project.

### 6.6 Alternative Cost Comparison

A preliminary cost opinion for both alternatives is provided in the table below, that includes the 30-year forecasted O&M cost based on an annual escalation factor of 3.5%.

**Table 6.6.1 – Project Cost Comparison**

| Cost Component | Alternative No. 1 | Alternative No. 2 |
|---|---|---|
| Construction Cost | $9,948,000 | $9,058,000 |
| O&M Cost (30 year forecasted) | $6,469,610 | $7,080,330 |
| **Total Present Worth** | **$16,417,610** | **$16,138,330** |

The operation and maintenance (O&M) costs associated with Alternative No. 1 are based on the sewer rent that will be assessed by SCDPW. SCDPW has indicated that they would assume full operation of the Phase 1 collection and conveyance infrastructure without increasing the current total annual O&M budget for SCSD #24, if a 100% gravity sewer collection system is installed. Since both alternatives include areas requiring low-pressure sewers, additional O&M costs have been considered to account for the replacement of individual grinder pumps that would be expected to occur roughly every 10 years for the full life of the system. As such, the Village's O&M cost for each alternative has been comprised of the following two cost components: 1) O&M (sewer rent), which is proportionally based on the Phase 1 service area single-family-equivalent (SFE) flow contribution to the current permitted flow at SCSD #24, and 2) replacement costs for each grinder pump station based on the quantity of stations previously stated herein this engineering design report at the assumed 10-year replacement interval. Both cost components are escalated based on 3.5% per year.

SCDPW bases their O&M (sewer rent) on SFE flow units equal to 225 GPD. As such, the Phase 1 service area is comprised of 267 SFE (i.e. 60,000 GPD ÷ 225GPD/SFE). The current annual O&M budget for

SCSD #24 is $200,000. Therefore, the Village will be responsible to pay 40% of the annual operation and maintenance budget equal to a total annual cost of $80,000 per year (i.e. 40% × $200,000). Distributing this total annual cost to the Phase 1 service area will result in an O&M rate equal to **$300/year/SFE** (i.e. $80,000/year ÷ 267 SFE). As such, the annual O&M (sewer rent) cost component for both alternatives is expected to be the same.

The grinder pump station replacement cost component of the O&M is directly related to the quantity of grinder pumps in each alternative. Based on the preliminary collection system layouts identified in the engineering design report, there are a total of one hundred thirteen (113) pumps in Alternative No. 1 (i.e. 63 simplex + 25 duplex), and a total of thirty-seven (37) grinder pumps in Alternative No. 2 (i.e. 1 simplex + 18 duplex). A present worth budget of $1,500 per grinder pump per 10-year interval has been assigned to each pump to represent the life-cycle costs that could be expected for pump replacement and/or repair. Projecting this cost over a 30-year period for the quantity of grinder pumps identified above, with an annual escalation factor of 3.5%, the total grinder pump replacement costs are project to be $644,177 for Alternative No. 1 and $1,254,890 for Alternative No. 2.

## 7.0 RECOMMENDED ALTERNATIVE

### 7.1 Basis of Selection

Alternative No. 1 – Installation of a combined gravity/low-pressure sewer system, including two (2) submersible pump stations was selected as the recommended alternative. While both alternatives address the issue of providing collection and conveyance infrastructure to connect the Phase 1 service area to SCSD #24, Alternative No. 2 requires a greater quantity of mechanical equipment (i.e. grinder pumps at each sewer connection), which will result in an additional long-term O&M cost of approximately $600,000 over a 30-year period. Although the up-front construction costs associated with Alternative No. 2 are approximately $900,000 less than Alternative No. 1, the low-pressure sewer infrastructure does not offer the same flexibility to readily accommodate future changes of use and/or expansion of the service area, that otherwise would be readily accommodated by the Alternative No. 1 layout, without requiring installation of additional infrastructure within the Phase 1 service area. Furthermore, SCDPW does not wish to proliferate the number of mechanical components within their collection systems, as these components complicate O&M and can potentially result in costly repairs that require outside labor forces and/or additional service provider contracts to address, therefore, resulting in the preference for a primarily passive sewer system (i.e. gravity sewers). Pump failures can also potentially result in loss of business to commercial property connections that can have a long-term negative effect on the relationship between the municipality and its rate payers.

An overview of the Alternative No. 1 Phase 1 service area collection and conveyance infrastructure is provided in **Figure 4**. Preliminary plan and profiles for the gravity sewer mains identified under the selected alternative are provided in **Appendix E**.

### 7.2 Cost Opinion

Table 7.2.1 presents the cost opinion for the engineering design, and construction for the Phase 1 service area collection and conveyance infrastructure.

The cost opinion is the approximation of the cost of the project as it has been defined herein this document, which may change during the design due to unanticipated conditions. The cost opinion is the product of a cost estimating process that attempts to consider the following elements:

1. Difficulty to construct the project,

2. Anticipated means and methods of qualified and competent contractors who have the prerequisite experience with the size and complexity of the project,

3. Escalation for labor and fringe benefits necessary to construct the project,

4. Insurance and cost of obtaining bonds and warranties that are in accordance with industry standards,

5. A construction schedule that considers the optimum time to gain regulatory approvals, advertise for bids, timely award and execution of the construction contract(s), and the season, weather and other site-specific conditions that impact the construction period,

6. Inflation and the economic climate (bidding environment) when the project is to be undertaken,

7. Estimated quantities and projected unit prices for items that will be incorporated into the project,

8. An approximation of the detailed design elements that are usually added during consultation with the client, regulatory agencies, and stakeholder input,

9. Direct costs for contractor general requirements, which includes such items as project management and coordination, quality control, temporary facilities and controls, cleaning and waste management.

10. Reasonable and customary indirect costs for profit, overhead and contractor contingencies are used by the bidder,

11. And, an adequate contingency based on the degree of assumptions and unknowns involved with implementing the construction.

The cost opinion is predicated on the project consistently moving forward without delays that are out of the control of the designer and/or Inc. Village of Westhampton Beach. The back-up used to compute the construction cost opinion is provided in **Appendix F**

**Table 7.2.1 - Project Cost Opinion – Alternative No. 1**

| No. | Cost Element | Total ($) - 2018 |
|---|---|---|
| 1 | Sewer, Pump Station & Force Main Construction | $9,9480,000 |
| **Construction Sub-total . . .** | | **$9,948,000*** |
| 2 | Engineering Design Fee (Plans & Specifications) | $510,000 |
| 3 | Construction Administration Fee | $240,000 |
| 4 | Construction Inspection (Hourly Rate) | $740,000 |
| ***Engineering Sub-total . . .*** | | ***$1,490,000*** |
| 7 | Topographical Survey | $350,000 |
| 8 | Private Utility Mark-Out | $75,000 |
| 9 | Soil Borings, Existing Pavement Cores & Piezometers (including Geotechnical Report) | $75,000 |
| 10 | Operations & Maintenance Manual | $70,000 |
| 11 | Land & Easement Acquisition | $30,000 |

| | | |
|---|---|---|
| 12 | Legal and Bond Counsel | $20,000 |
| ***Soft Costs Sub-total . . .*** | | ***$620,000*** |
| **Construction + Engineering + Soft Costs Sub-total . . .** | | **$12,058,000** |
| | **10% Total Project Contingency** | **$1,210,000** |
| **Total Project Cost . . .** | | **$13,268,000** |
| **SAY . . .** | | **$13,270,000** |

*The construction sub-total identified in this Engineering Design Report is $1,288,000 more than the construction sub-total identified in the *Map & Plan: Sewer System Formation* dated October 2017 which equaled to $8,663,000. The increase reflects escalation from 2017 to 2018 and the addition of the grinder pump stations to the scope of work to be constructed by the Village as identified in this Engineering Design Report.

**The total project cost is estimated to be approximately **$15,350,000**, based on an anticipated construction start date in 2022 and an annual escalation rate of 3.5% per year on the construction subtotal ONLY (i.e. $9,950,000 × $1.035^{4years}$ + Engineering Sub-total + Soft Costs Sub-total × 10% total project contingency).

### 7.3 Project Schedule

The following is the proposed project schedule for implementing the recommended alternative of the gravity sewer reconstruction:

| TASK DESCRIPTION | SCHEDULE |
|---|---|
| Facility Plan Submittal | July 26, 2018 |
| Approval of Facility Plan | September 30, 2018 |
| Approval of Design Services Proposal by Village | November 27, 2018 |
| Authorize M/WBE for Survey and Soil Borings | December 18, 2018 |
| Design Plans and Specifications submitted to NYSDEC | September 30, 2019 |
| Comments received from NYSDEC | November 15, 2019 |
| Resubmission of Design Report, Plans and Specifications to NYSDEC | December 15, 2019 |
| Advertise for Bid | March 15, 2020 |
| Bid Opening for Sewer Contracts | April 19, 2020 |
| Contract Award by Village | June 11, 2020 |
| Initiate Construction | September 14, 2020 |
| Complete Construction | March 15, 2022 |

### 7.4 Special Site Considerations

The critical works areas in the Phase 1 service area are comprised of the municipal parking lots and private utility easements located along the Main Street Business corridor of the Village. Due to the seasonal influx of people seen during the summer season, the construction contract(s) will stipulate periods of time where no work can be performed by the contractor in certain areas of the project to minimize disruptions to businesses, parking and vehicular and pedestrian traffic. Good housekeeping will also be strictly enforced

onto the contractor(s) to ensure the areas impacted by work are kept in an orderly fashion and debris is removed from the work areas daily and not allowed to accumulate over time. Mechanical street sweeping will also be a requirement of the contract(s).

### 7.5 Next Steps

The engineering design for the collection and conveyance infrastructure must be finalized and approved in preparation for construction. Before detailed design begins, topographical survey, subsurface utility mark-out, and soil borings, pavement cores and piezometer work will be conducted to identify potential utility conflicts and geological conditions that need to be addressed prior to construction.

The Inc. Village of Westhampton Beach will also be filing grant applications with the Town of Southampton, the New York State Environmental Facilities Corporation (NYS EFC) and the New York State Department of Environmental Conservation (NYS DEC) before initiating the detailed design phase of work.

# FIGURES

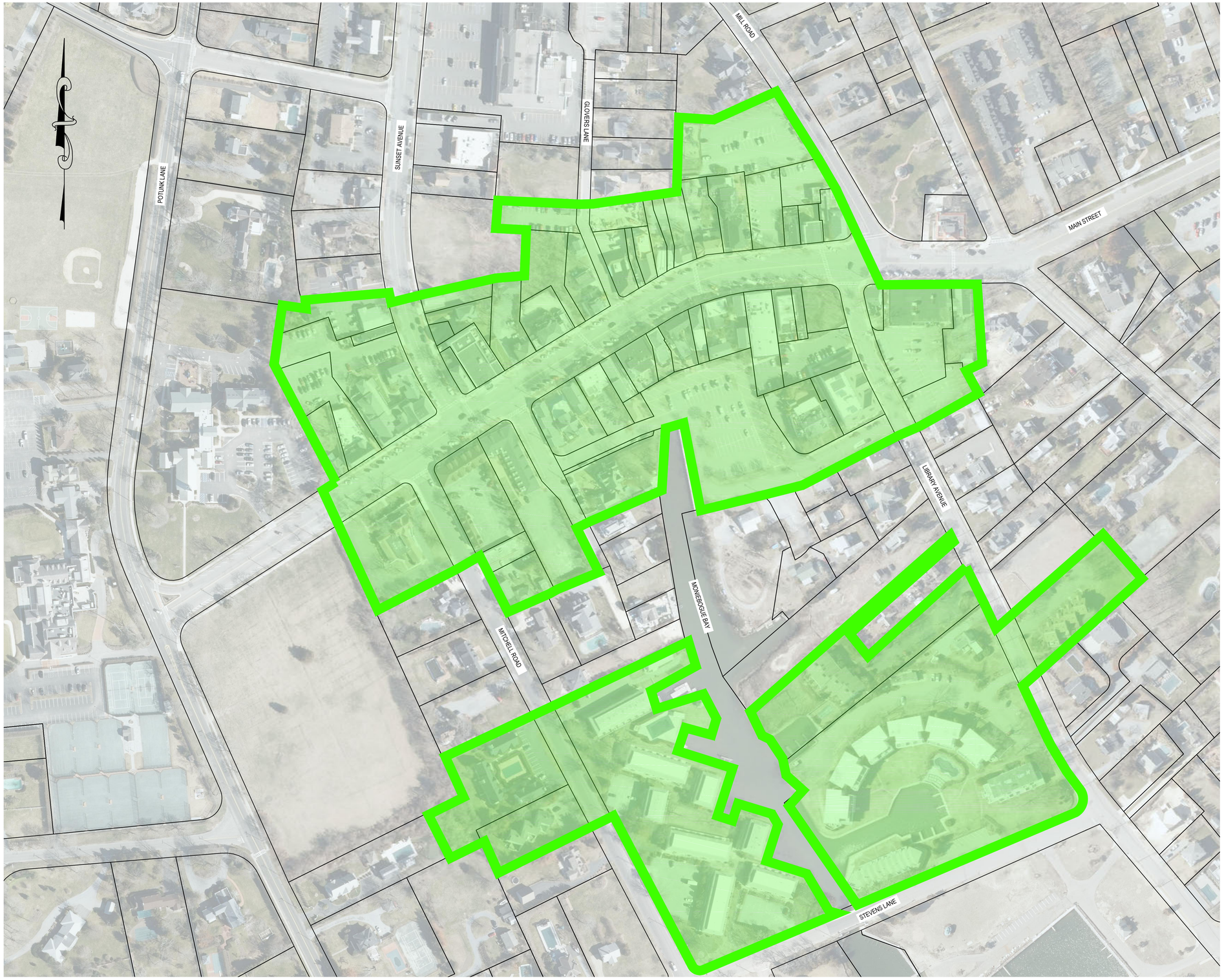


**Phase 1 Service Area Overview**

SCALE: 1"= 100'-0"

H2M

538 Broad Hollow Road, 4th Floor East
Melville, NY 11747
631.756.8000 • www.h2m.com

CONSULTANTS:

| MARK | DATE | DESCRIPTION |
|---|---|---|
| | | |

"ALTERATION OF THIS DOCUMENT EXCEPT BY A LICENSED PROFESSIONAL IS ILLEGAL"

| DESIGNED BY: | DRAWN BY: | CHECKED BY: | REVIEWED BY: |
|---|---|---|---|
| | | | |

| PROJECT No.: | DATE: | SCALE: |
|---|---|---|
| WHBV 18-01 | MAY 2018 | AS SHOWN |

CLIENT

**Village of Westhampton Beach**

**Collection System Preliminary Design**

**Suffolk County, NY**

CONTRACT

**ALL CONTRACTS**

STATUS

**NOT FOR CONSTRUCTION**

SHEET TITLE

**PHASE 1 SERVICE AREA OVERVIEW MAP**

DRAWING No.

**FIGURE 1**

SHEET No.

OF

C:\Users\moon\appdata\local\temp\AcPublish_16508\F-FIGURES.dwg Last Modified: Jul 02, 2018 - 2:30pm Plotted on: Jul 02, 2018 - 2:30pm By: tbono

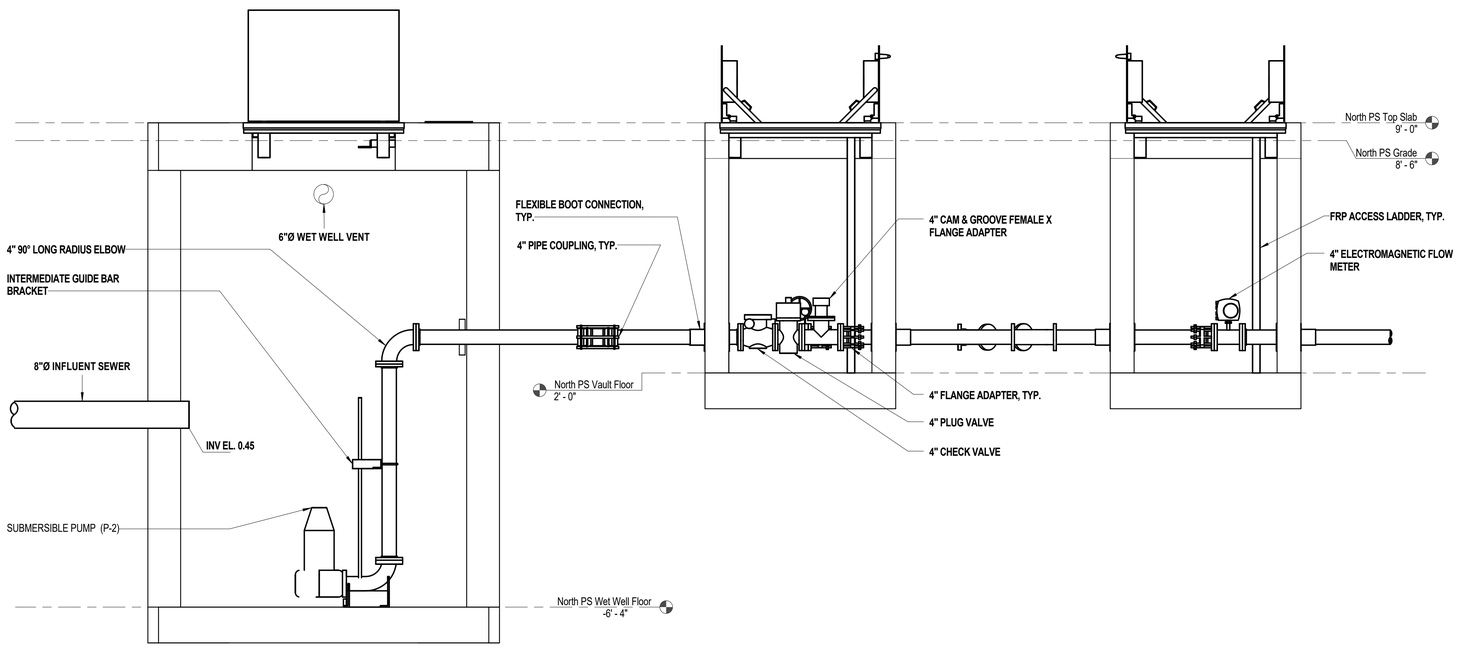


## 1 North Pump Station Section

SCALE 1/2" = 1'-0"

H 2 M architects + engineers

538 Broad Hollow Road, 4th Floor East
Melville, NY 11747

CONSULTANTS:

| MARK | DATE | DESCRIPTION |
|---|---|---|
| | | |

"ALTERATION OF THIS DOCUMENT EXCEPT BY A LICENSED PROFESSIONAL IS ILLEGAL"

| DESIGNED BY: | DRAWN BY: | CHECKED BY: | REVIEWED BY: |
|---|---|---|---|
| NFB/SKG | SKG | | |

| PROJECT No: | DATE: | SCALE: |
|---|---|---|
| WHBV1801 | MAY 2018 | AS SHOWN |

CLIENT

**Village of Westhampton Beach**

**Collection System Preliminary Design**

**Suffolk County, NY**

CONTRACT

**ALL CONTRACTS**

STATUS

**NOT FOR CONSTRUCTION**

SHEET TITLE

**NORTH PUMP STATION SECTION**

DRAWING #

**FIGURE 2**

SHEET # OF

X:\WHBV (Inc. Village of Westhampton Beach) - 10962\WHBV1801 - Sewer System Eng Des Report\02-BIM-CADD\Con-docs\vet\mech\WHBV1801_Central17_M.rvt

5/29/2018 1:28:23 PM

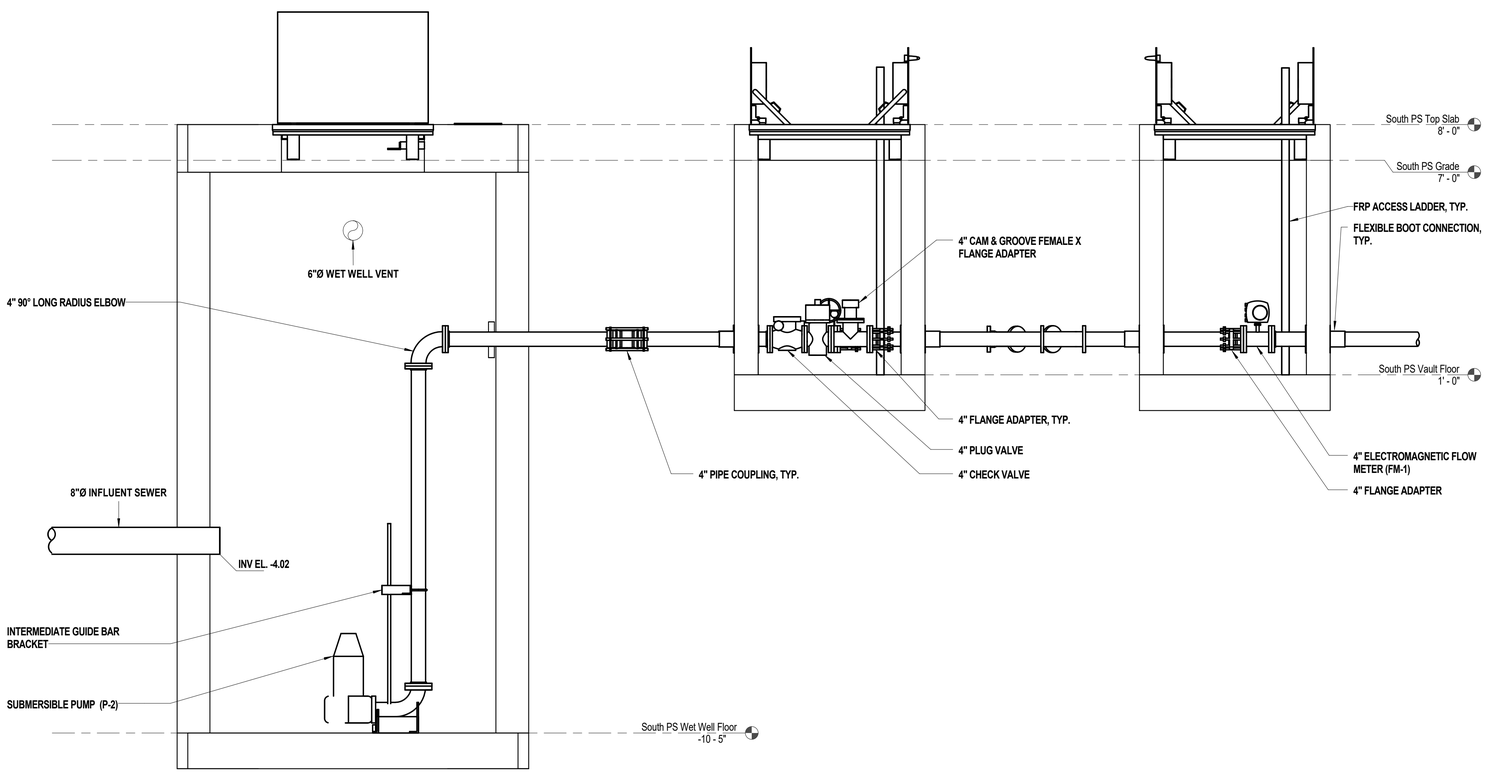


1 **South Pump Station Section**
SCALE 1/2" = 1'-0"


H 2 M architects + engineers

538 Broad Hollow Road, 4th Floor East
Melville, NY 11747


CONSULTANTS:

| MARK | DATE | DESCRIPTION |
|---|---|---|
| | | |

"ALTERATION OF THIS DOCUMENT EXCEPT BY A LICENSED PROFESSIONAL IS ILLEGAL"

| DESIGNED BY: | DRAWN BY: | CHECKED BY: | REVIEWED BY: |
|---|---|---|---|
| NFB/SKG | SKG | | |

| PROJECT No: | DATE: | SCALE: |
|---|---|---|
| WHBV1801 | MAY 2018 | AS SHOWN |

CLIENT

**Village of Westhampton Beach**

**Collection System Preliminary Design**

**Suffolk County, NY**

CONTRACT

**ALL CONTRACTS**

STATUS

**NOT FOR CONSTRUCTION**

SHEET TITLE

**SOUTH PUMP STATION SECTION**

DRAWING #

**FIGURE 3**

SHEET # OF

X:\WHBV (Inc. Village of Westhampton Beach) - 10592\WHBV1801 - Sewer System Eng Des Report\02-BIM-CADD\Con-docs\wef\mech\WHBV1801_Central17_M.rvt

5/29/2018 1:28:28 PM

**Phase 1 Service Area Planned Infrastructure**

SCALE: 1"= 100'-0"


H2M

538 Broad Hollow Road, 4th Floor East
Melville, NY 11747
631.756.8000 • www.h2m.com


CONSULTANTS:

| MARK | DATE | DESCRIPTION |
|---|---|---|
| | | |

"ALTERATION OF THIS DOCUMENT EXCEPT BY A LICENSED PROFESSIONAL IS ILLEGAL"

| DESIGNED BY: | DRAWN BY: | CHECKED BY: | REVIEWED BY: |
|---|---|---|---|
| | | | |

| PROJECT No.: | DATE: | SCALE: |
|---|---|---|
| WHBV 18-01 | MAY 2018 | AS SHOWN |

CLIENT

**Village of Westhampton Beach**

**Collection System Preliminary Design**

**Suffolk County, NY**

CONTRACT

**ALL CONTRACTS**

STATUS

**NOT FOR CONSTRUCTION**

SHEET TITLE

**PLANNED COLLECTION AND CONVEYANCE INFRASTRUCTURE OVERVIEW**

DRAWING No.

**FIGURE 4**

SHEET No.

OF

X:\WHBV (Inc. Village of Westhampton Beach) - 10862\WHBV1801 - Sewer System Eng Dwg Report\2-BIM-CADD\Con-docs\general\FIGURES.dwg Last Modified: Jul 02, 2018 - 2:03pm Plotted on: Jul 02, 2018 - 2:03pm By: rbono

# EXHIBIT A

Historical Site Surveys and Test Boring Logs

**Incorporated Village Of Westhampton Beach**
DEPARTMENT OF BUILDING AND ZONING
165 Mill Road
Westhampton Beach, New York 11978
(631) 288-3478 – Fax (631) 288-4332

**PAUL HOULIHAN**
Building & Zoning Administrator

**BRIDGET NAPOLI**
Ordinance Enforcement Officer

**WILLAM HART**
Fire Marshal

March 19, 2018

Nicholas F. Bono, P.E.
H2M Architects + Engineers
538 Board Hollow Road-4th Floor East
Melville, New York 11747

Re: North and South of Main Street Surveys

Dear Nick:

Attached please find the names, addresses and surveys for the properties on the North and South side of Main Street that have been identified as private properties that the sewer line will cross as per the Village Tax Rolls.

If I can be of any further assistance please do not hesitate to call.

Sincerely,

Kerry Rogozinski
Building Permits Coordinator

905-11-2-2.2
65 Main Street
Phyllis H Weisz
195 Smithtown Blvd
Nesconsett, NY 11767

905-11-2-9
77 Main Street
Marilyn Katz
P.O. Box1525
Lenox Hill Station
New York, NY 10021

905-11-2-26
133 Main Street
Georgica Pond Associates, LLC
c/o Dwayne Wagner
135 Main St Suite 5
Westhampton Beach NY 11978

905—11-2-30,31
5 & 7 Library Avenue
Westhampton Free Library
7 Library Ave
Westhampton Beach, NY 11978

905-11-3-31
58 Library Avenue
WESTHAMPTON OWNERS CORP
58 Library Ave
Westhampton Beach NY 11978

905-12-3-17
54 Main Street
Patio Building Condo Unit Owners
54 Main St
Westhampton Beach, NY 11978

905-12-4-25
36 Sunset Avenue
Beaver Lake Development Corp
84 Main St
Westhampton Beach, NY 11978

905-11-2-19-
10 Parloto Drive
Village Property

905-12-4-31.2
98 Main Street
Town of Southampton
116 Hampton Road
Southampton, New York 11968

905-12-4-53.1
112 Main Street
Rolling Pin Inc
112 Main Street
Westhampton Beach, New York 11968

905-12-4-36.1
124 Main Street
Westhampton Shenanigans Inc
P.O. Box 1646
Westhampton Beach, NY 11978-1646

905-12-4-37
128 Main Street
Sigfridus Jorna
446 Montauk Highway
Westhampton Beach, NY 11978

905-12-4-39
138 Main Street
JP Morgan Chase & Co.-Westhampton Bch
c/o Industry Consulting Group, Inc.
PO Box 8265
Wichita Falls TX 76307-8265

905-12-4-40
144 Main Street
Beach Comber Inn Inc
144 Main Street
Westhampton Beach, NY 11978

905-12-4-41.1
148 Main Street
William Ciraco
592 N MacEwen Dr
Osprey, FL 34229

905-12-4-20.4
99 Mill Road
Village Property

THIS CONDOMINIUM WILL APPEAR IN DISTRICT 0905, SECTION 011.02, BLOCK 02.00 OF THE SUFFOLK COUNTY TAX MAP.
THE TAX MAP PARCEL NUMBERS ARE THE SAME AS THE CONDOMINIUM UNIT NUMBER.
THE COMMON AREA WILL APPEAR IN DISTRICT 0905, SECTION 011.00 BLOCK 02.00 AND LOT 002.002.

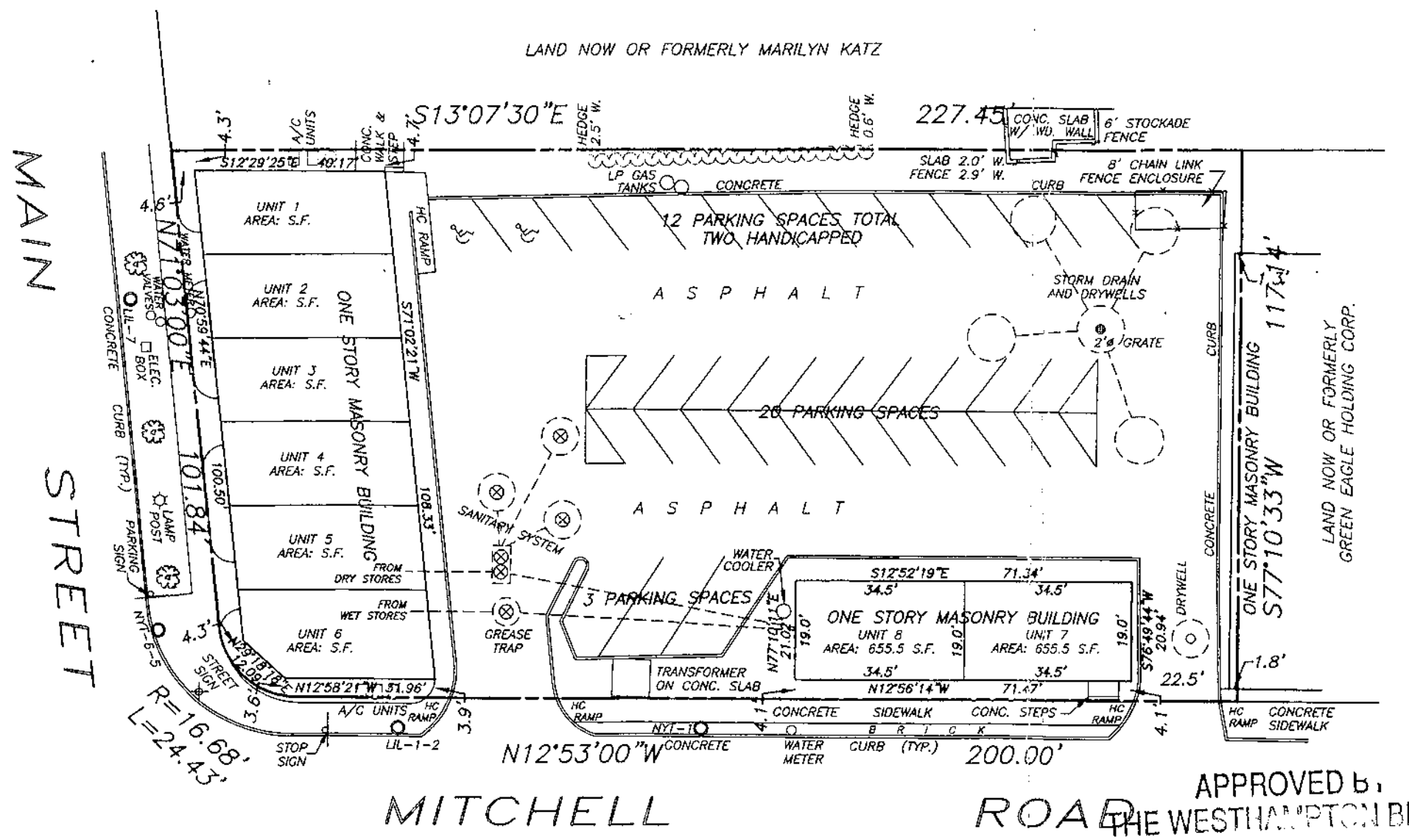


JAN 2 9 2001

APPROVED by
THE WESTHAMPTON BEACH PLANNING BOARD

O UTILITY POLE
TREE
CAST IRON COVER

Kurt A Gorman 10/11/01
CHAIRMAN DATE

AREA: 25,765 S.F. = 0.591 AC.

Subject to all other required approvals and compliance with all of the codes of the Village of Westhampton Beach

JOB NO. F2779
REVISIONS:

license no. 050149

CONDOMINIUM MAP OF
# SOUTH BEACH CONDOMINIUMS

SITUATE AT
INC. VILLAGE OF WESTHAMPTON BEACH
TOWN OF SOUTHAMPTON
SUFFOLK COUNTY, NEW YORK

SCALE: 1"=30' DATE: APRIL 12, 2000

APPROVED by
THE WESTHAMPTON BEACH PLANNING BOARD

CHAIRMAN

Subject to all other required approvals and compliance with all of the codes of the Village of Westhampton Beach


NORTHSTAR SURVEYING, P.C.
132 W. Montauk Highway
Hampton Bays, N.Y. 11946
(631) 728-5330

Marc E. Charest, L.S.
Successors to
Paul T. Canalizo, L.S. Robert A. Kart, L.S.
Good Ground Surveyors, P.C.

# ALTA/ASCM SURVEY OF
## DESCRIBED PROPERTY
## SITUATE AT
INCORPORATED VILLAGE OF
WESTHAMPTON BEACH
TOWN OF SOUTHAMPTON
SUFFOLK COUNTY, NEW YORK
S.C.T.M. DIST. 0905 SEC. 11 BLK. 02 LOT 26

15 8 0 15 30 45 60 75 90 105 120 135

SCALE: 1" = 30'  DATE: JUNE 20, 2006

CERTIFIED TO: GEORGICA POND ASSOCIATES,LLC.
135 MAIN STREET,LLC.
FIDELITY NATIONAL TITLE INSURANCE CO.
MORGAN STANLEY MORTGAGE CAPITAL HOLDINGS,LLC.

JOB NO.: 2005-364
MAP NO.:
FILED:
REVISONS:
REV.FINAL SURVEY 8/30/06
UPDATE SURVEY TO ALTA/ASCM SPECS.
REV. CERTIFICATIONS 6/27/07

LICENSE NO. 050363


**HANDS ON SURVEYING**
26 SILVER BROOK DRIVE
FLANDERS, NEW YORK
11901
TEL: (631)-723-1954 - FAX:(631)-723-1329
MARTIN D. HAND L.S.


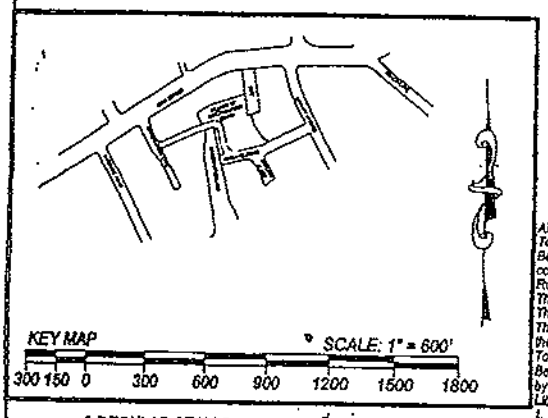


All that certain plot ,piece or parcel of land, situate, lying and being in the Incorporated Village of Westhampton Beach, Town of Southampton, County of Suffolk, New York, bounded and described as follows:
Beginning at a point on the Southerly side of Main Street distant 126.09 feet from the extreme Westerly end of a curve connecting the Southerly side of Main Street with the Westerly side of Library Avenue.
Running thence South 07 degrees, 01 minutes, 30 seconds West a distance of 215.44 feet;
Thence South 85 degrees, 13 minutes, 30 seconds West distance of 60.03 feet;
Thence North 06 degrees, 50 minutes, 48 seconds East a distance of 227.32 feet to the Southerly side of Main Street;
Thence along the Southerly side of Main Street South 83 degrees, 20 minutes, 16 seconds East a distance of 59.84 feet to the point or place of beginning.
Together with a right of way for ingress and egress to premises above described in common with others, over the following parcel of land;
Beginning at a point on the northerly side of Parkside Drive the following two courses and distances from the corner formed by the intersection of the Northerly side of Parkside Drive with the Westerly side of Library Avenue;
1. South 76 degrees, 00 minutes, 30 seconds West, 183.23 feet;
2. Along a curve having a radius of 28.55 feet a distance of 27.97 feet and from said point of beginning;
Running thence along a curve having a radius of 28.55 feet a distance of 13.10 feet;
Thence North 21 degrees, 34 minutes, 10 seconds West a distance of 82.54 feet;
Thence North 06 degrees, 08 minutes, West a distance of 53.94 feet;
Thence North 85 degrees, 13 minutes, 13 seconds East a distance of 26.04 feet;
Thence South 68 degrees, 08 minutes, East a distance of 144.34 feet to the Northerly side of Parkside Drive and the point or place of beginning.

9 REGULAR STALLS
1 HANDICAPPED STALL
10 STALLS TOTAL.

LOT AREA: 13,130 SQ.FT. = 0.301 ACRE
EXTERIOR FOOTPRINT OF EXISTING BUILDING
( AT GROUND LEVEL): = 8,390 SQ.FT.

| | |
|---|---|
| CURRENT ZONING: B-1 ( BUSINESS DISTRICT 1) | |
| PERMITTED USE: | RETAIL WITH OFFICE ABOVE |
| MINIMUM LOT AREA: | 2,000 SQ.FT. |
| MINIMUM LOT WIDTH: | 60' |
| MAXIMUM BUILDING COVERAGE: | 50% |
| MINIMUM SETBACKS: | |
| FRONT: | 0' MIN. 5' MAX |
| SIDE: | NONE TOTAL SIDE YARD: NONE |
| REAR: | 25' |
| MAXIMUM BUILDING HEIGHT: | 35' |
| PARKING: | AS SHOWN ON SURVEY |
| THERE ARE NO SETBACKS FOR ACCESSORY STRUCTURES | |

## ZONING INFORMATION
INFORMATION RECEIVED FROM INC. VILLAGE OF WESTHAMPTON BEACH WEB SITE/ BUSINESS DISTRICTS AND HOTEL DISTRICT TABLE OF DIMENSIONAL REGULATIONS, LAST REVISED 8/15/2003

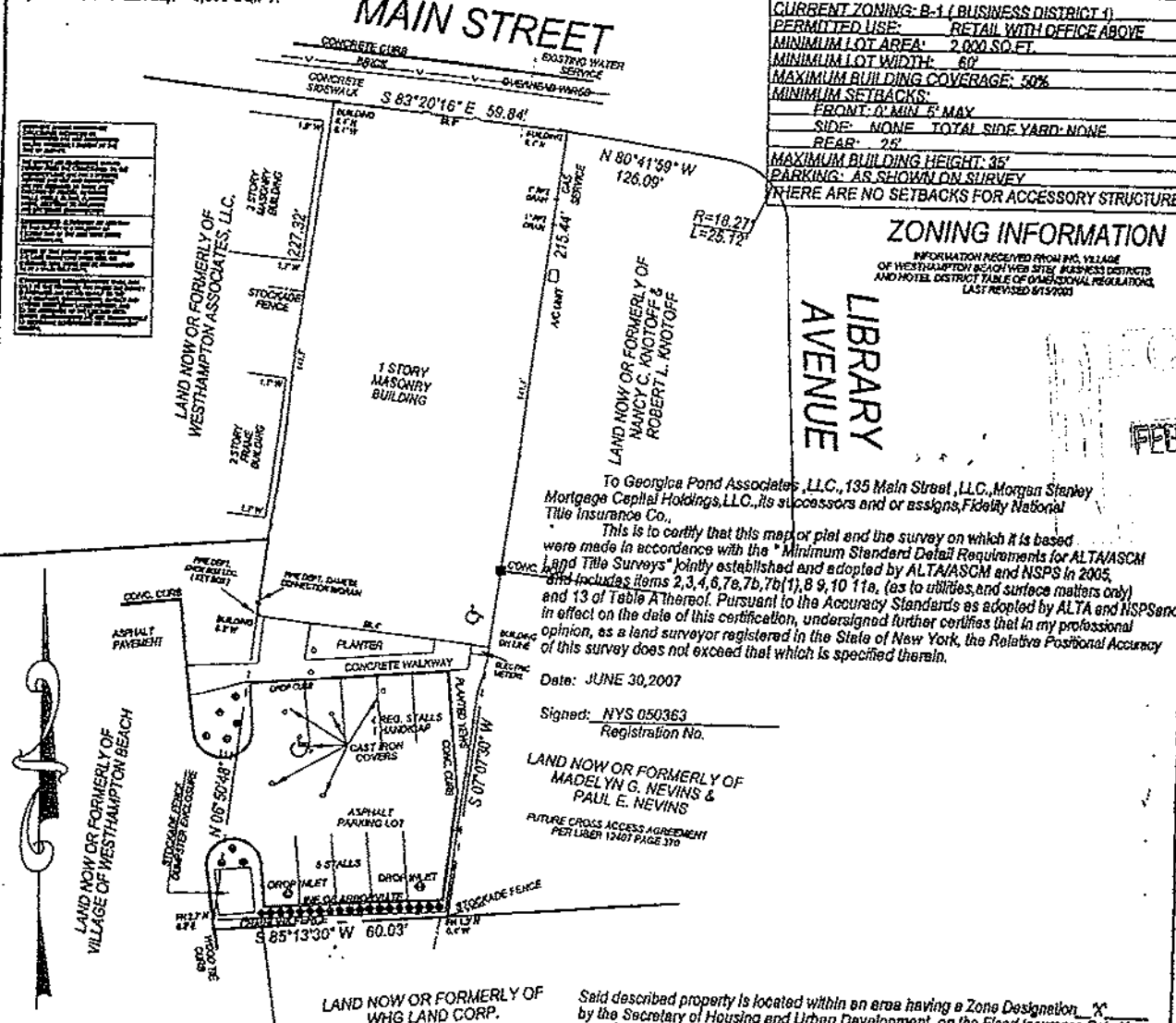


To Georgica Pond Associates ,LLC.,135 Main Street ,LLC.,Morgan Stanley Mortgage Capital Holdings,LLC.,its successors and or assigns,Fidelity National Title Insurance Co.,

This is to certify that this map or plat and the survey on which it is based were made in accordance with the " Minimum Standard Detail Requirements for ALTA/ASCM Land Title Surveys" jointly established and adopted by ALTA/ASCM and NSPS in 2005, and includes items 2,3,4,6,7a,7b,7b(1),8 9,10 11a, (as to utilities,and surface matters only) and 13 of Table A thereof. Pursuant to the Accuracy Standards as adopted by ALTA and NSPSand in effect on the date of this certification, undersigned further certifies that in my professional opinion, as a land surveyor registered in the State of New York, the Relative Positional Accuracy of this survey does not exceed that which is specified therein.

Date: JUNE 30,2007

Signed: NYS 050363
Registration No.

Said described property is located within an area having a Zone Designation "X" by the Secretary of Housing and Urban Development, on the Flood Insurance Rate Map No. 36103C0767 G , with a date of identification of MAY 4,1998 , in Suffolk County, State of New York, which is the current Flood Insurance Rate Map for the community in which the property is situated.

FEB 18

Survey for:

# WESTHAMPTON OWNERS CORPORATION

At

*Westhampton Beach*

Town of

*Southampton*

Suffolk County, New York

S.C.T.M.: 0905-011.00-03.00-031.000

20 0 20

SCALE: 1"=20'

NOTES:

1. AREA = 15,233 S.F.
2. ■ = MONUMENT FOUND, ▲ = STAKE FOUND.
3. ELEVATIONS ARE REFERENCED TO NAVD (1988)
4. LOT COVERAGE:

| | |
|---|---|
| BLDGS, PORCHES | 4816 S.F. |
| POOL | 706 S.F. |
| SHED | 72 S.F. |
| TOTAL | 5594 OR 36.7% |

OCT. 14, 2011 AMENDED LABEL.
DATE: OCT. 05, 2011
JOB NO: 2011-371

CERTIFIED TO:
WESTHAMPTON OWNERS CORPORATION


DAVID H. FOX, L.S. P.C. N.Y.S.L.S. #50234
*FOX LAND SURVEYING*
64 SUNSET AVENUE
WESTHAMPTON BEACH, N.Y. 11978
(631) 288-0022



UNAUTHORIZED ALTERATION OR ADDITION TO THIS SURVEY IS A VIOLATION OFSECTION 7209 OF THE NEW YORK STATE EDUCATION LAW. COPIES OF THIS SURVEY MAP NOT BEARING THE LAND SURVEYOR'S INKED SEAL OR EMBOSSED SEAL SHALL NOT BE CONSIDERED TO BE A VALID TRUE COPY.

CERTIFICATION INDICATED HEREON SHALL RUN ONLY TO THE PERSON FOR WHOM THE SURVEY IS PREPARED AND ON HIS BEHALF TO THE TITLE COMPANY, GOVERNMENTAL AGENCY AND LENDING INSTITUTION LISTED HEREON , AND TO THE ASSIGNEES OF THE LENDING INSTITUTION. CERTIFICATIONS ARE NOT TRANSFERABLE TO ADDITIONAL INSTITUTIONS OR SUBSEQUENT OWNERS.


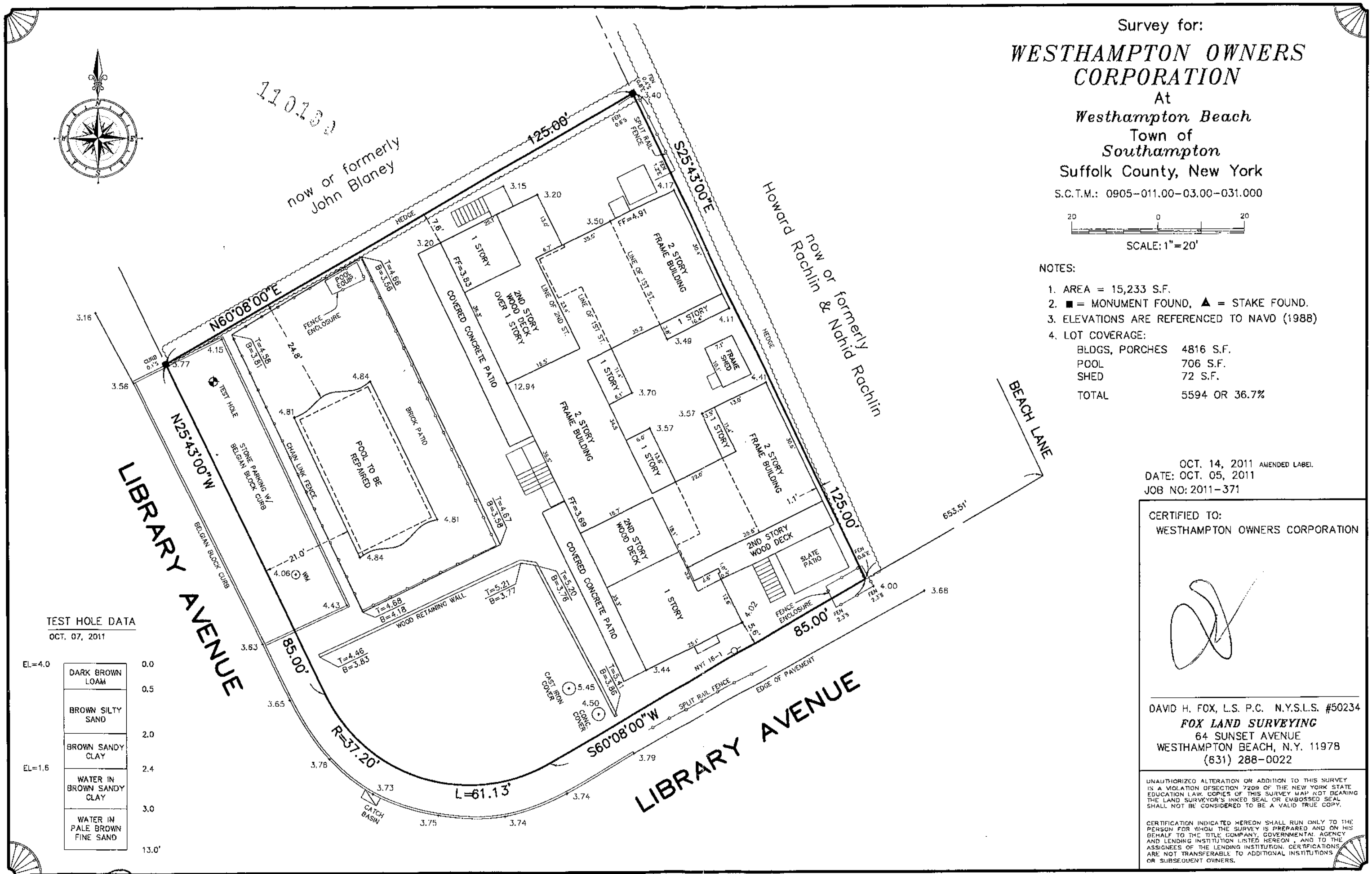


TEST HOLE DATA

OCT. 07, 2011

| | | |
|---|---|---|
| EL=4.0 | DARK BROWN LOAM | 0.0 |
| | | 0.5 |
| | BROWN SILTY SAND | |
| | | 2.0 |
| | BROWN SANDY CLAY | |
| EL=1.6 | | 2.4 |
| | WATER IN BROWN SANDY CLAY | |
| | | 3.0 |
| | WATER IN PALE BROWN FINE SAND | |
| | | 13.0' |

DWG: 2011-371

(5)

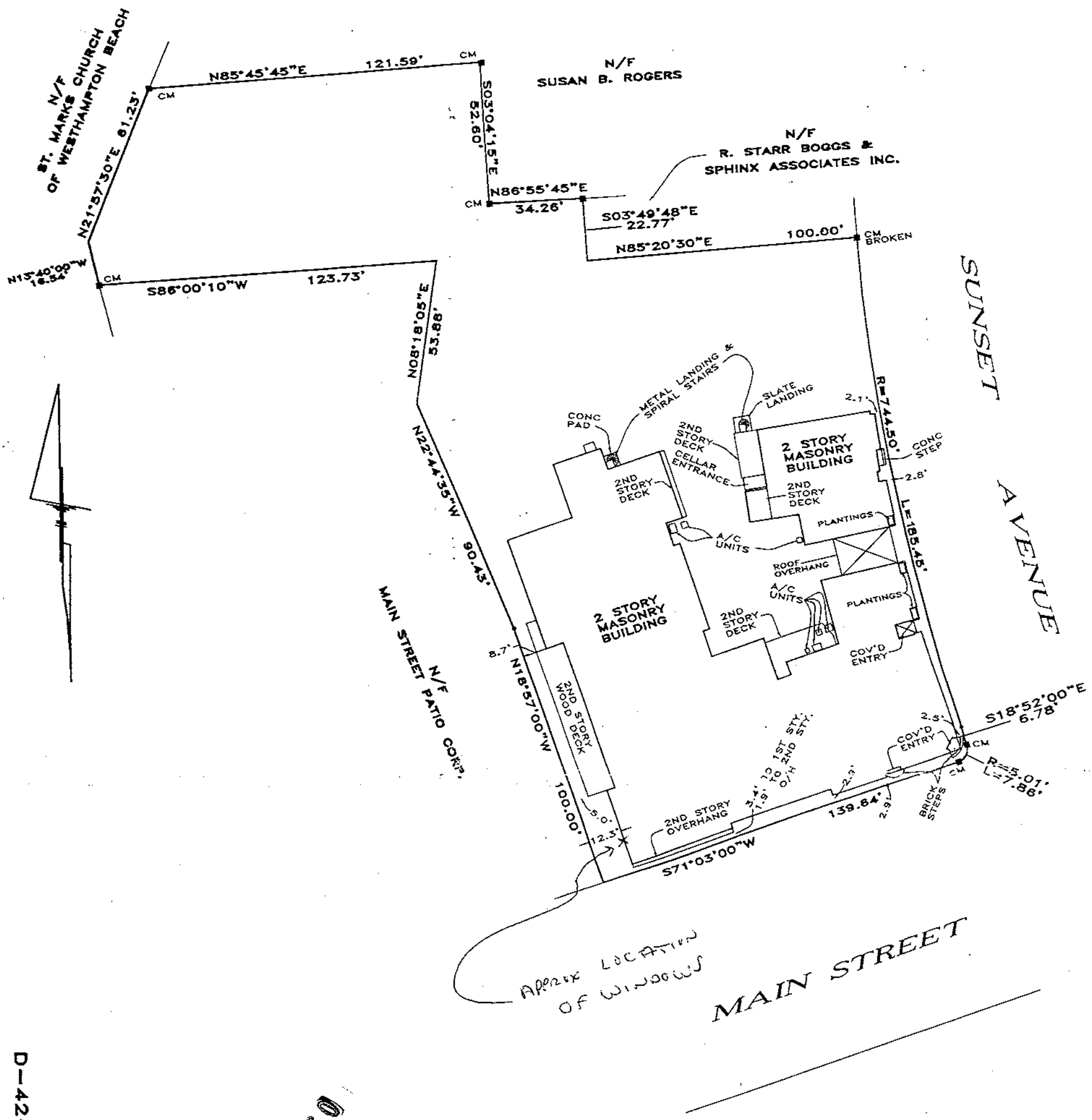


D-42-C-45

050060

| TAX MAP | |
|---|---|
| DISTRICT | 0905 |
| SECTION | 12 |
| BLOCK | 03 |
| LOT | 17 |

UNAUTHORIZED ALTERATION OR ADDITION TO A SURVEY MAP BEARING A LICENSED LAND SURVEYOR'S SEAL IS A VIOLATION OF SECTION 7209, SUB-DIVISION 2, OF THE NEW YORK STATE EDUCATION LAW.

ONLY COPIES FROM THE ORIGINAL OF THIS SURVEY MARKED WITH AN ORIGINAL OF THE LAND SURVEYOR'S INKED SEAL OR EMBOSSED SEAL SHALL BE CONSIDERED TO BE VALID TRUE COPIES.

CERTIFICATIONS INDICATED HEREON SHALL RUN ONLY TO THE PERSON FOR WHOM THE SURVEY IS PREPARED, AND ON HIS BEHALF TO THE TITLE COMPANY, GOVERNMENTAL AGENCY AND LENDING INSTITUTION LISTED HEREON, AND TO THE ASSIGNEES OF THE LENDING INSTITUTION. CERTIFICATIONS ARE NOT TRANSFERABLE TO ADDITIONAL INSTITUTIONS OR SUBSEQUENT OWNERS.


RAYNOR & MARCKS
SURVEYING & ENGINEERING P.C.
QUOGUE, N.Y.
631-653-4066


MAP OF PROPERTY

# PATIO BUILDING CONDOMINIUM CORP.

SITUATE

## WESTHAMPTON BEACH

TOWN OF SOUTHAMPTON – SUFFOLK COUNTY, N.Y.
SURVEYING TO LOCATE – SCALE: 1" INCH = 40' FEET
BUILDING ONLY: JAN. 2, 2002

STATE OF NEW YORK
STEPHEN M. MARCKS
No. 049583
LICENSED LAND SURVEYOR

AREA: 43,976 SQ.FT. (1.00956 AC.)
BK:185 PG:16-18

D-42-C-45
DRAWN BY TK
(ARCHIV38 PATIO)

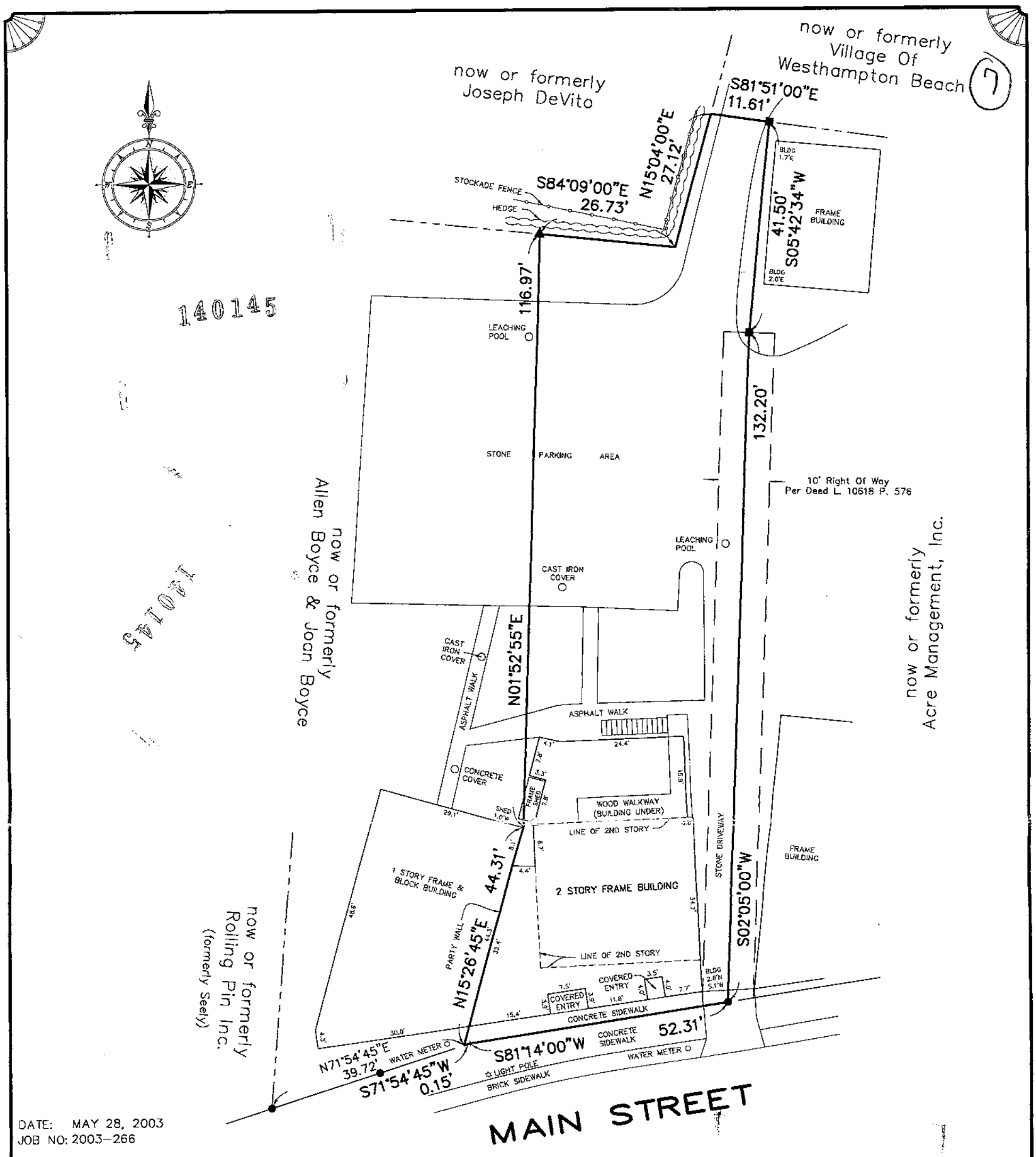


DATE: MAY 28, 2003
JOB NO: 2003-266

CERTIFIED TO:
WESTHAMPTON SHENANIGANS INC.


DAVID H. FOX N.Y.S.L.S. #50234
*FOX LAND SURVEYING*
PO BOX 224
SPEONK, N.Y. 11972
(631) 325-2902



UNAUTHORIZED ALTERATION OR ADDITION TO THIS SURVEY IS A VIOLATION OF SECTION 7209 OF THE NEW YORK STATE EDUCATION LAW. COPIES OF THIS SURVEY MAP NOT BEARING THE LAND SURVEYOR'S INKED SEAL OR EMBOSSED SEAL SHALL NOT BE CONSIDERED TO BE A VALID TRUE COPY.

CERTIFICATION INDICATED HEREON SHALL RUN ONLY TO THE PERSON FOR WHOM THE SURVEY IS PREPARED AND ON HIS BEHALF TO THE TITLE COMPANY, GOVERNMENTAL AGENCY AND LENDING INSTITUTION LISTED HEREON, AND TO THE ASSIGNEES OF THE LENDING INSTITUTION. CERTIFICATIONS ARE NOT TRANSFERABLE TO ADDITIONAL INSTITUTIONS OR SUBSEQUENT OWNERS.


Survey for: 140145

# *WESTHAMPTON SHENANIGANS INC.*

At

*Village of Westhampton Beach*

Town of

*Southampton*

Suffolk County, New York

S.C.T.M.: 0905-012.00-04.00-036.001

20 0 20

SCALE: 1"=20'

NOTES:

1. AREA = 6913 S.F.
2. ■ = MONUMENT FOUND, ▲ = STAKE FOUND, ● = DRILLHOLE FOUND.
3. REFERENCE DEED; L. 11239 P. 358.

DWG: 2003-266

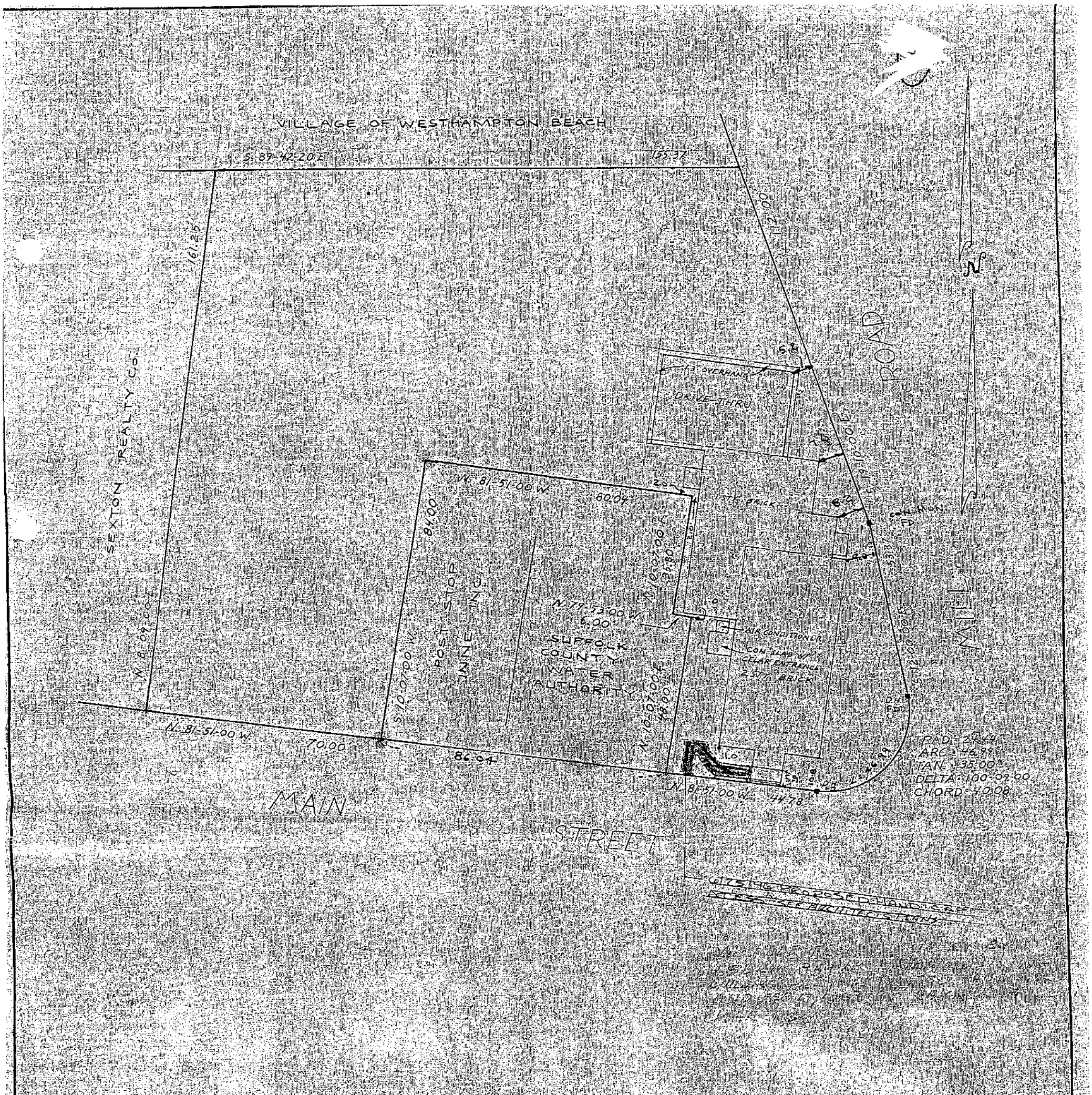


MAP OF PROPERTY

BANK OF NEW YORK

SITUATE

WESTHAMPTON BEACH

TOWN OF SOUTHAMPTON – SUFFOLK COUNTY, N.Y.

BUILDING LOCATION SURVEY SCALE: 1" INCH = 30 FEET

TAX MAP

DISTRICT: 0905

SECTION: 012

BLOCK: 4

LOT: 39, 42, 43

UNAUTHORIZED ALTERATION OR ADDITION TO THIS SURVEY IS A VIOLATION OF SECTION 7209 OF THE NEW YORK STATE EDUCATION LAW.

COPIES OF THIS SURVEY MAP NOT BEARING THE LAND SURVEYOR'S INKED SEAL OR EMBOSSED SEAL SHALL NOT BE CONSIDERED TO BE A VALID TRUE COPY.

GUARANTEES INDICATED HEREON SHALL RUN ONLY TO THE PERSON FOR WHOM THE SURVEY IS PREPARED, AND ON HIS BEHALF TO THE TITLE COMPANY, GOVERNMENTAL AGENCY AND LENDING INSTITUTION LISTED HEREON, AND TO THE ASSIGNEES OF THE LENDING INSTITUTION. GUARANTEES ARE NOT TRANSFERABLE TO ADDITIONAL INSTITUTIONS OR SUBSEQUENT OWNERS.

CERTIFIED TO:
BANK OF NEW YORK

RECEIVED
SEP 16 2008
WESTHAMPTON BUILDING DEPT.

RAYNOR & MARCKS
SURVEYORS, P.C.
QUOGUE, N.Y.

D.H. = DRILL HOLE
■ = CONCRETE MONUMENT
△ = WOOD STAKE
BK. 33 PG. 7
AREA = 27,256 sq. ft.

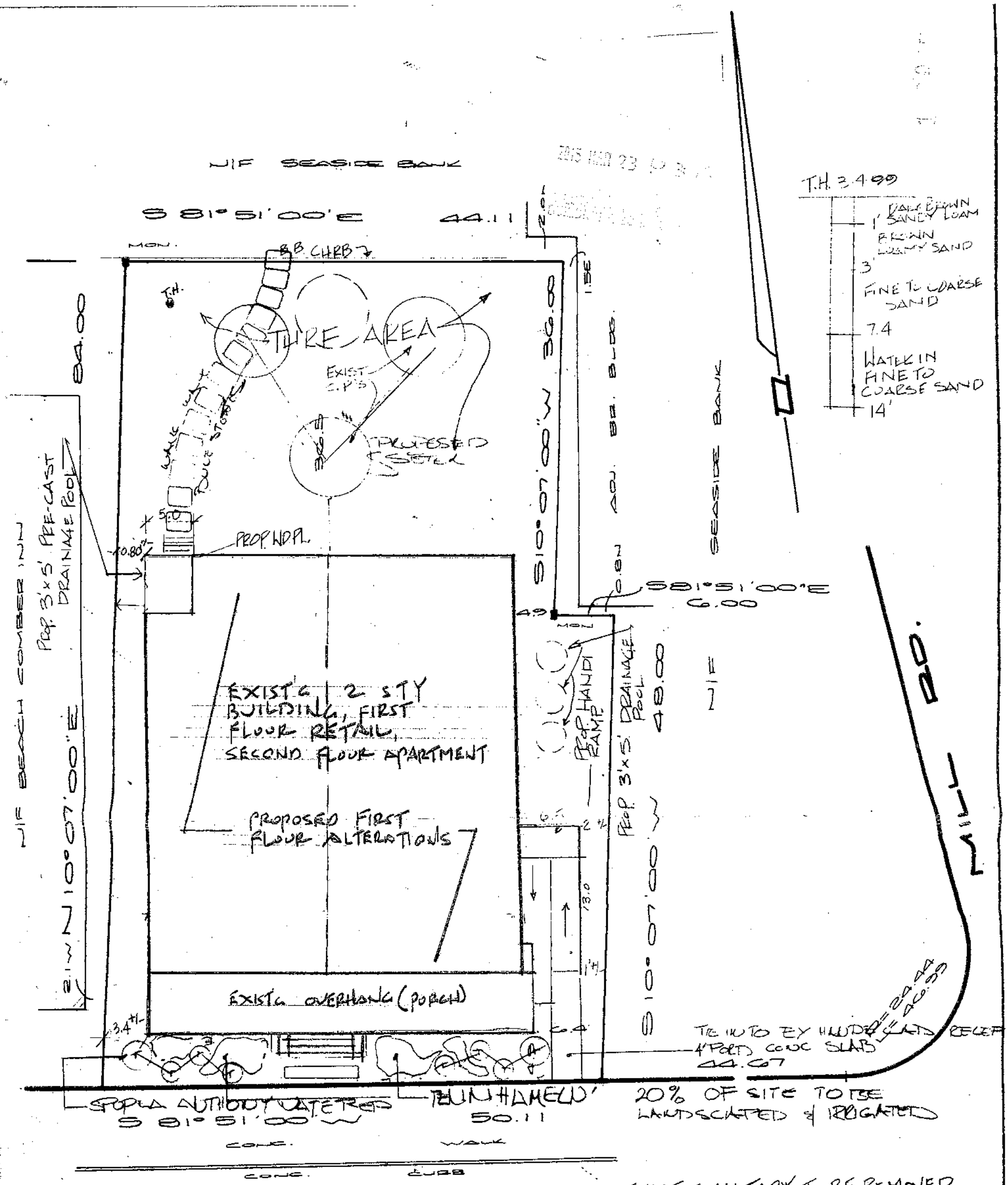


— EXIST. SANITARY TO BE REMOVED & FILLED
ZONED: B-1
FEMA FLOOD ZONE 'X' ZONE

PARKING REQUIREMENTS
1 PROP. APARTMENTS (2 SPACES PER) 2
599 SQ/FT PROP. RETAIL SPACE
(1 SPACE/150 SQ/FT OF FLOOR AREA) 4
TOTAL = 6
TO BE PAID TO OFFSTREAT PARKING FUND

MAP OF
**DESCRIBED PROPERTY**
LOCATED AT
**WESTHAMPTON BEACH**
(INCORPORATED VILLAGE)
TOWN OF SOUTHAMPTON
SUFFOLK CO. — N.Y.

GUAR. TO:
OWNER: WILLIAM CIRACO
148 MAIN ST.
WESTHAMPTON, NY

DRAINAGE CALCULATIONS
GRASS AREA: 2152 sq/ft x .08 x .17 = 29.2 ft³
ROOF AREA: 1844 sq/ft x 1.0 x .17 = 313.5 ft³
342.7 / 68.42 ft³/L.F = 5.0 L.F. REQ.

S.C.T.M.
0905 - 012 - 04 - 41.1
AREA LOT = 39996.2 S.F.
EXIST LOT COVERAGE = 21% (868)
PROP. LOT COVERAGE = 46% (1844)

DATE: FEB. 16, 1999

RICHARD C. DRAKE
CITY & LAND SURVEYOR
NYS LIC. NO. 44605
391 NORTH WOOD AVE.
LINDENHURST, N.Y.
Richard C. Drake
Licensed Land Surveyor No. 44605
SCALE
516-957-8178 FAX 226-4324
MEASUREMENTS U.S. STANDARD

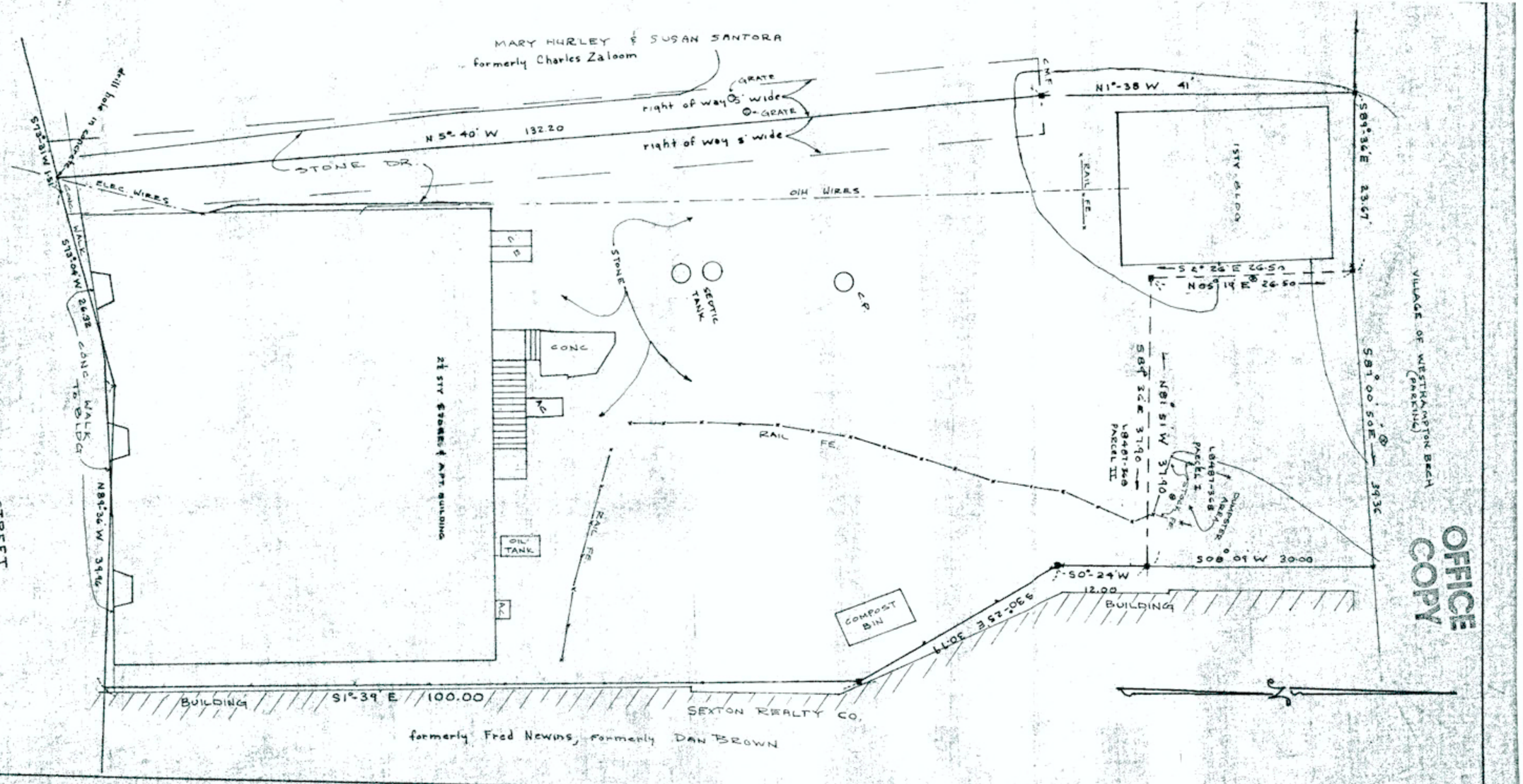
MARY HURLEY & SUSAN SANTORA
formerly Charles Zaloom
GRATE
right of way 3' wide
GRATE
right of way 3' wide
N 5°-40' W 132.20
STONE DR.
ELEC. WIRES
OIH WIRES
N1°-38 W 41'
S89°-36'E 23.67'
S89°00'50E 39.36
1 STY BLDG
RAIL FE.
S 2°-26' E 26.50
N05°19' E 26.50
VILLAGE OF WESTHAMPTON BEACH (PARKING)
OFFICE COPY
STONE
SEPTIC TANK
C.P.
CONC
2½ STY STORES & APT. BUILDING
OIL TANK
RAIL FE.
S89°32'E 37.90
N88°51'W 37.40
PARCEL II
PARCEL I
DUMPSTER AREA
S08°09'W 30.00
S0°-24'W 12.00
BUILDING
COMPOST BIN
S30°-25'E 30.74
BUILDING
S1°-39 E 100.00
SEXTON REALTY CO.
formerly Fred Newins, formerly DAN BROWN
MAIN STREET
CONC. WALK TO BLDG
N88°-36' W 39.46
S13°-21'W 131'
S13°-04'W 26.32
drill hole in concrete
TAX MAP
0905
012
04
37
MAP OF PROPERTY
ACRE MANAGEMENT, INC.
SITUATE
WESTHAMPTON BEACH
TOWN OF SOUTHAMPTON
SUFFOLK COUNTY, N.Y.
SURVEYED JUNE 19, 1969
SCALE 1 INCH = 10 FEET
REDATE: JULY 10, 1984
: SEPT 30, 1997
RECEIVED
DEC 15 1997
VILLAGE OF WESTHAMPTON BEACH
BUILDING DEPARTMENT

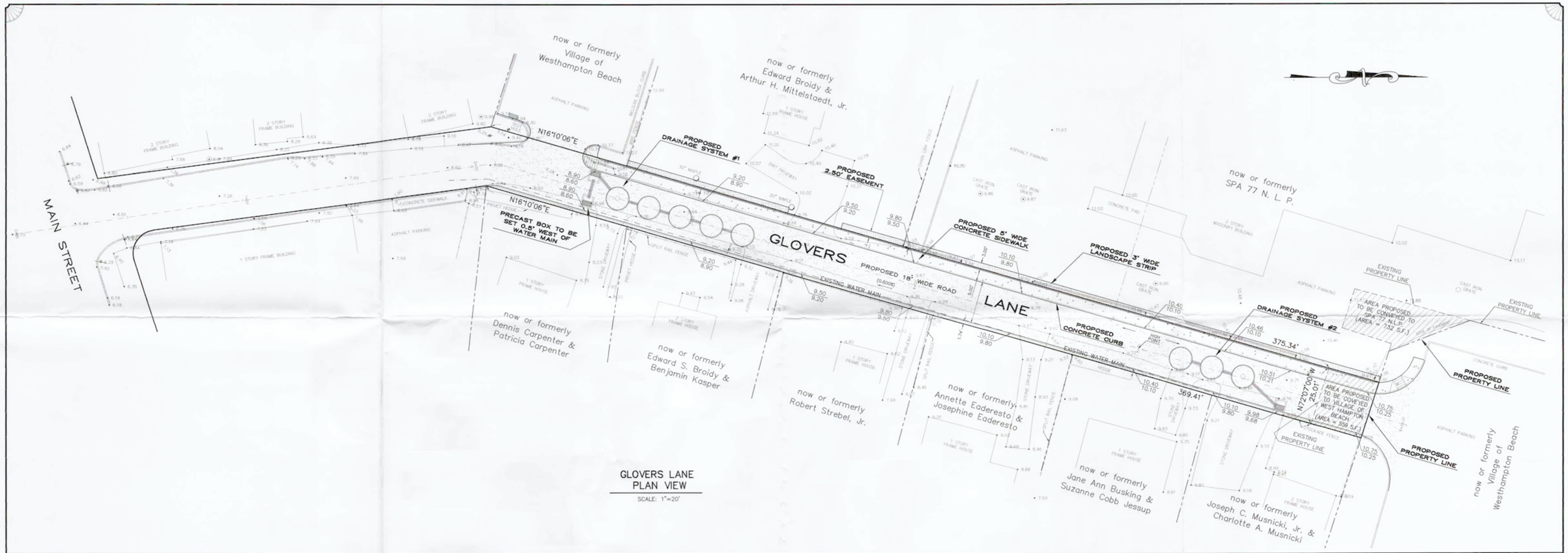


GLOVERS LANE
PLAN VIEW
SCALE: 1"=20'

## CATCH BASIN DETAIL

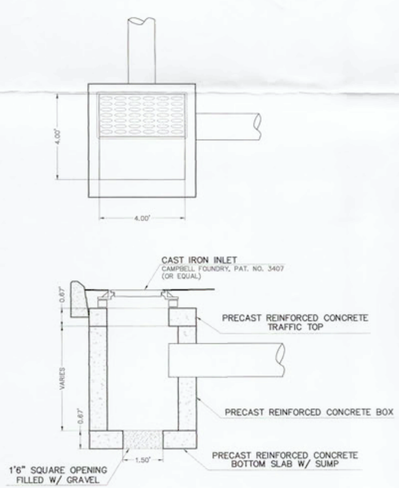


## TRIBUTARY AREAS

DRAINAGE AREA #1

PAVEMENT & SIDEWALK = 5,750 S.F. x 1.00 x 2/12 = 958.3 C.F.
NATURAL & LANDSCAPED = 4,060 S.F. x 0.10 x 2/12 = 67.7 C.F.

TOTAL = 1,026 C.F.

REQUIRED = 1,026 C.F./6,842 V.F. = 15 V.F.
PROVIDE = (5) – 10' DIAM. x 3' EFF. DEPTH POOLS = 15 V.F.

DRAINAGE AREA #2

PAVEMENT & SIDEWALK = 2,973 S.F. x 1.00 x 2/12 = 495.5 C.F.
NATURAL & LANDSCAPED = 615 S.F. x 0.10 x 2/12 = 10.3 C.F.

TOTAL = 505.8 C.F.

REQUIRED = 505.8 C.F./6,842 V.F. = 7.4 V.F.
PROVIDE = (3) – 10' DIAM. x 3' EFF. DEPTH POOLS = 9 V.F.

## MOUNTABLE CURB DETAIL

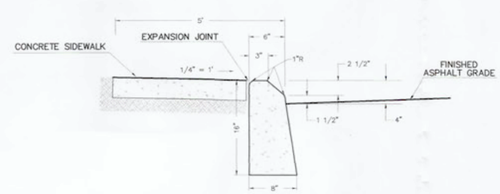


## LEGEND

= EXISTING CATCH BASIN
= EXISTING SPOT ELEVATION
= SIGN
= UTILITY POLE
= PROPOSED TOP OF CURB / PROPOSED BOTTOM OF CURB
= PROPOSED CATCH BASIN
= PROPOSED LEACHING POOL

## TEST HOLE

NOV. 2, 1999

## APPLICANT

VILLAGE OF WEST HAMPTON BEACH
92 SUNSET AVENUE
VILLAGE OF WHB, N.Y. 11978

## NOTE

ELEVATIONS SHOWN HEREON ARE FROM ACTUAL SURVEYS AND ARE REFERENCED TO N.G.V DATUM (MSL 1929).

## LOCATION MAP

SCALE: 1"=600'

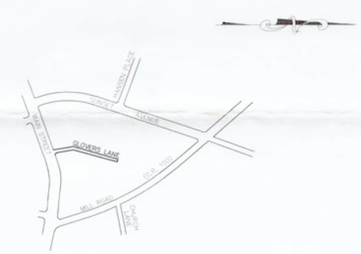


NOV. 05, 1999 PLAN PREPARED
DATE: REVISION:

# SITE PLAN

Prepared For:

*Village of Westhampton Beach*
*"Glovers Lane Improvements"*

At

*Village of Westhampton Beach*
Town of
*Southampton*
Suffolk County, New York

Suff. Co. Tax Map:
Dist. 0905 Sect. 012.00 Block 04.00

SCALE: 1"=20'
JOB NO: 99–0179

STATE OF NEW YORK · DAVID H. FOX · LICENSED LAND SURVEYOR · NO. 50234

DAVID H. FOX N.Y.S.L.S. #50234
FOX LAND SURVEYING
PO BOX 224
SPEONK, N.Y. 11972
(516) 325–2902

UNAUTHORIZED ALTERATION OR ADDITION TO THIS SURVEY IS A VIOLATION OF SECTION 7209 OF THE NEW YORK STATE EDUCATION LAW. COPIES OF THIS SURVEY MAP NOT BEARING THE LICENSED SURVEYOR'S INKED SEAL OR EMBOSSED SEAL SHALL NOT BE CONSIDERED TO BE A TRUE AND VALID COPY.

CERTIFICATION INDICATED HEREON SHALL RUN ONLY TO THE PERSON FOR WHOM THE SURVEY IS PREPARED AND ON HIS BEHALF TO THE TITLE COMPANY, GUARANTOR, ASSOCIATION OF TITLE INSURANCE COMPANIES, LENDING INSTITUTION AND ASSIGNEES OF THE LENDING INSTITUTION. CERTIFICATIONS ARE NOT TRANSFERABLE TO ADDITIONAL INSTITUTIONS OR SUBSEQUENT OWNERS.

DWG: 990179

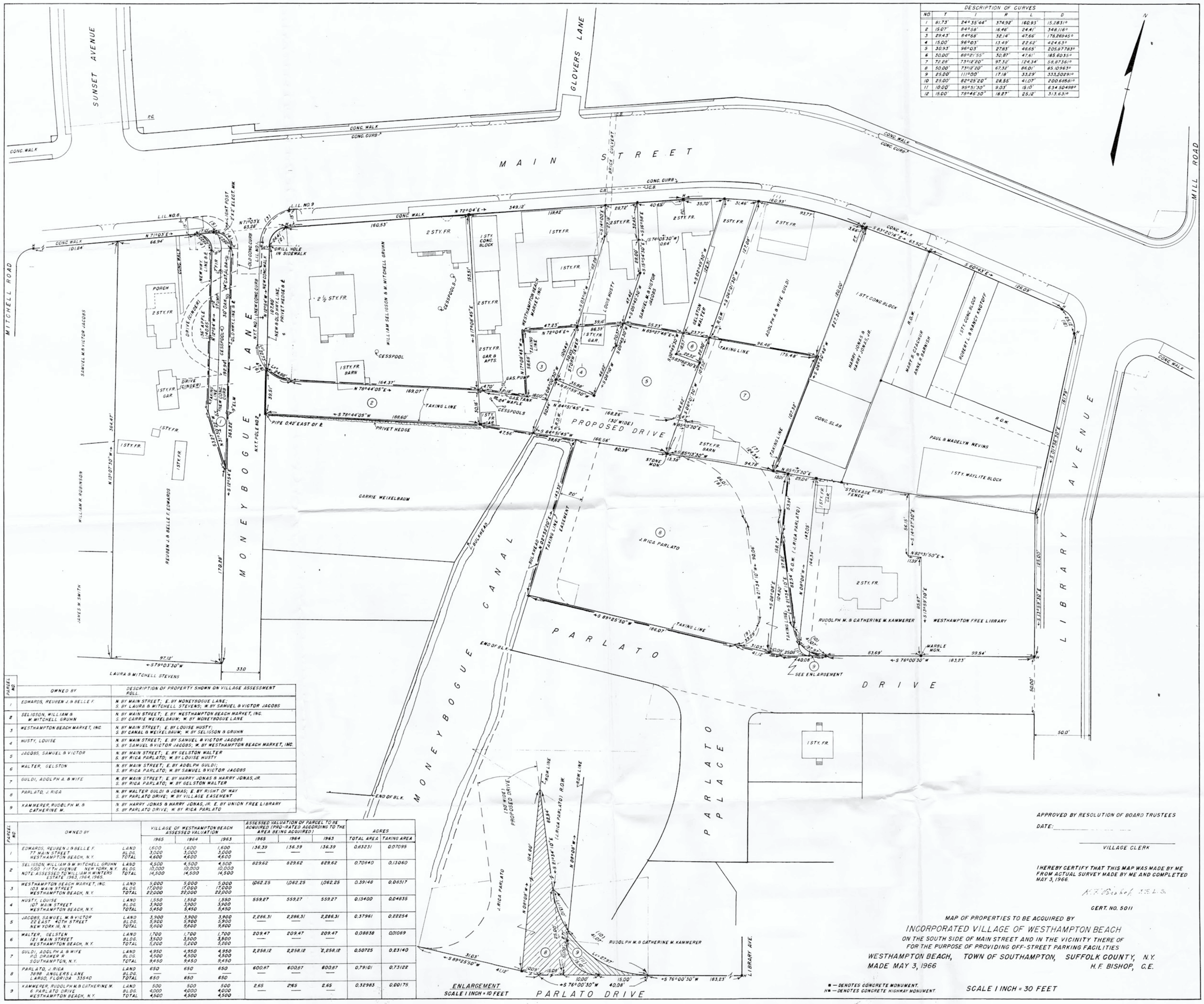


| DESCRIPTION OF CURVES | | | | | |
|---|---|---|---|---|---|
| NO. | T | I | R | L | D |
| 1 | 81.73' | 24° 35' 44" | 374.92' | 160.93' | 15.283° |
| 2 | 15.07' | 84° 58' | 16.46' | 24.41' | 348.116° |
| 3 | 29.43' | 84° 58' | 32.14' | 47.66' | 178.26945° |
| 4 | 15.00' | 96° 03' | 13.49' | 22.62' | 424.63° |
| 5 | 30.93' | 96° 03' | 27.83' | 46.65' | 205.87783° |
| 6 | 30.00' | 88° 21' 55" | 30.87' | 47.61' | 185.6035° |
| 7 | 72.26' | 73° 12' 20" | 97.32' | 124.34' | 58.87361° |
| 8 | 50.00' | 73° 12' 20" | 67.32' | 86.01' | 85.10963° |
| 9 | 25.00' | 11° 12' 00" | 17.18' | 33.29' | 333.50291° |
| 10 | 25.00' | 82° 05' 20" | 28.55' | 41.07' | 200.68581° |
| 11 | 10.00' | 95° 51' 30" | 9.03' | 15.10' | 634.50498° |
| 12 | 15.00' | 78° 46' 30" | 18.27' | 25.12' | 313.63° |

| PARCEL NO | OWNED BY | DESCRIPTION OF PROPERTY SHOWN ON VILLAGE ASSESSMENT ROLL |
|---|---|---|
| 1 | EDWARDS, REUBEN J. & BELLE F. | N. BY MAIN STREET; E. BY MONEYBOGUE LANE; S. BY LAURA & MITCHELL STEVENS; W. BY SAMUEL & VICTOR JACOBS |
| 2 | SELIGSON, WILLIAM & M MITCHELL GRUHN | N. BY MAIN STREET; E. BY WESTHAMPTON BEACH MARKET, INC. S. BY CARRIE WEIXELBAUM; W. BY MONEYBOGUE LANE |
| 3 | WESTHAMPTON BEACH MARKET, INC. | N. BY MAIN STREET; E. BY LOUISE HUSTY; S. BY CANAL & WEIXELBAUM; W. BY SELIGSON & GRUHN |
| 4 | HUSTY, LOUISE | N. BY MAIN STREET; E. BY SAMUEL & VICTOR JACOBS S. BY SAMUEL & VICTOR JACOBS; W. BY WESTHAMPTON BEACH MARKET, INC. |
| 5 | JACOBS, SAMUEL & VICTOR | N. BY MAIN STREET; E. BY GELSTON WALTER S. BY RICA PARLATO; W. BY LOUISE HUSTY |
| 6 | WALTER, GELSTON | N. BY MAIN STREET; E. BY ADOLPH GULDI; S. BY RICA PARLATO; W. BY SAMUEL & VICTOR JACOBS |
| 7 | GULDI, ADOLPH A. & WIFE | N. BY MAIN STREET; E. BY HARRY JONAS & HARRY JONAS, JR. S. BY RICA PARLATO; W. BY GELSTON WALTER |
| 8 | PARLATO, J. RICA | N. BY WALTER GULDI & JONAS; E. BY RIGHT OF WAY S. BY PARLATO DRIVE; W. BY VILLAGE EASEMENT |
| 9 | KAMMERER, RUDOLPH M. & CATHERINE M. | N. BY HARRY JONAS & HARRY JONAS, JR. E. BY UNION FREE LIBRARY S. BY PARLATO DRIVE; W. BY RICA PARLATO |

| PARCEL NO | OWNED BY | | VILLAGE OF WESTHAMPTON BEACH ASSESSED VALUATION | | | ASSESSED VALUATION OF PARCEL TO BE ACQUIRED (PRO-RATED ACCORDING TO THE AREA BEING ACQUIRED) | | | ACRES | |
|---|---|---|---|---|---|---|---|---|---|---|
| | | | 1965 | 1964 | 1963 | 1965 | 1964 | 1963 | TOTAL AREA | TAKING AREA |
| 1 | EDWARDS, REUBEN J. & BELLE F. 77 MAIN STREET WESTHAMPTON BEACH, N.Y. | LAND | 1,600 | 1,600 | 1,600 | 136.39 | 136.39 | 136.39 | 0.83231 | 0.07095 |
| | | BLDG. | 3,000 | 3,000 | 3,000 | — | — | — | | |
| | | TOTAL | 4,600 | 4,600 | 4,600 | | | | | |
| 2 | SELIGSON, WILLIAM & M MITCHELL GRUHN 500 FIFTH AVENUE NEW YORK, N.Y. NOTE: ASSESSED TO WILLIAM H. WINTERS ESTATE 1963, 1964, 1965. | LAND | 4,500 | 4,500 | 4,500 | 829.62 | 829.62 | 829.62 | 0.70840 | 0.13060 |
| | | BLDG. | 10,000 | 10,000 | 10,000 | | | | | |
| | | TOTAL | 14,500 | 14,500 | 14,500 | | | | | |
| 3 | WESTHAMPTON BEACH MARKET, INC. 103 MAIN STREET WESTHAMPTON BEACH, N.Y. | LAND | 5,000 | 5,000 | 5,000 | 1,062.25 | 1,062.25 | 1,062.25 | 0.39148 | 0.08317 |
| | | BLDG. | 17,000 | 17,000 | 17,000 | | | | | |
| | | TOTAL | 22,000 | 22,000 | 22,000 | | | | | |
| 4 | HUSTY, LOUISE 107 MAIN STREET WESTHAMPTON BEACH, N.Y. | LAND | 1,550 | 1,550 | 1,550 | 559.27 | 559.27 | 559.27 | 0.13400 | 0.04835 |
| | | BLDG. | 3,900 | 3,900 | 3,900 | | | | | |
| | | TOTAL | 5,450 | 5,450 | 5,450 | | | | | |
| 5 | JACOBS, SAMUEL M. & VICTOR 22 EAST 40TH STREET NEW YORK 16, N.Y. | LAND | 3,900 | 3,900 | 3,900 | 2,286.31 | 2,286.31 | 2,286.31 | 0.37961 | 0.22254 |
| | | BLDG. | 5,900 | 5,900 | 5,900 | — | — | — | | |
| | | TOTAL | 9,800 | 9,800 | 9,800 | | | | | |
| 6 | WALTER, GELSTEN 121 MAIN STREET WESTHAMPTON BEACH, N.Y. | LAND | 1,700 | 1,700 | 1,700 | 209.47 | 209.47 | 209.47 | 0.08838 | 0.01089 |
| | | BLDG. | 3,500 | 3,500 | 3,500 | — | — | — | | |
| | | TOTAL | 5,200 | 5,200 | 5,200 | | | | | |
| 7 | GULDI, ADOLPH A. & WIFE P.O. DRAWER W. SOUTHAMPTON, N.Y. | LAND | 4,950 | 4,950 | 4,950 | 2,258.12 | 2,258.12 | 2,258.12 | 0.50725 | 0.23140 |
| | | BLDG. | 4,500 | 4,500 | 4,500 | — | — | — | | |
| | | TOTAL | 9,450 | 9,450 | 9,450 | | | | | |
| 8 | PARLATO, J. RICA 3898 ANGLERS LANE LARGO, FLORIDA 33540 | LAND | 650 | 650 | 650 | 600.87 | 600.87 | 600.87 | 0.79101 | 0.73122 |
| | | BLDG. | — | — | — | — | — | — | | |
| | | TOTAL | 650 | 650 | 650 | | | | | |
| 9 | KAMMERER, RUDOLPH M. & CATHERINE M. 6 PARLATO DRIVE WESTHAMPTON BEACH, N.Y. | LAND | 500 | 500 | 500 | 2.65 | 2.65 | 2.65 | 0.32983 | 0.00175 |
| | | BLDG. | 4,000 | 4,000 | 4,000 | — | — | — | | |
| | | TOTAL | 4,500 | 4,500 | 4,500 | | | | | |

APPROVED BY RESOLUTION OF BOARD TRUSTEES

DATE: _____

_____
VILLAGE CLERK

I HEREBY CERTIFY THAT THIS MAP WAS MADE BY ME FROM ACTUAL SURVEY MADE BY ME AND COMPLETED MAY 3, 1966.

H. F. Bishop, C.E.L.S.

CERT. NO. 5011

MAP OF PROPERTIES TO BE ACQUIRED BY

INCORPORATED VILLAGE OF WESTHAMPTON BEACH

ON THE SOUTH SIDE OF MAIN STREET AND IN THE VICINITY THERE OF

FOR THE PURPOSE OF PROVIDING OFF-STREET PARKING FACILITIES

WESTHAMPTON BEACH, TOWN OF SOUTHAMPTON, SUFFOLK COUNTY, N.Y.

MADE MAY 3, 1966 H. F. BISHOP, C.E.

■ — DENOTES CONCRETE MONUMENT.
H■ — DENOTES CONCRETE HIGHWAY MONUMENT.

SCALE 1 INCH = 30 FEET

EXISTING LOT COVERAGE: 3/19/13
BUILDING = 6,514 SQ. FT.
6,514 SQ. FT. / 33,165 SQ. FT. X 100
=19.6%

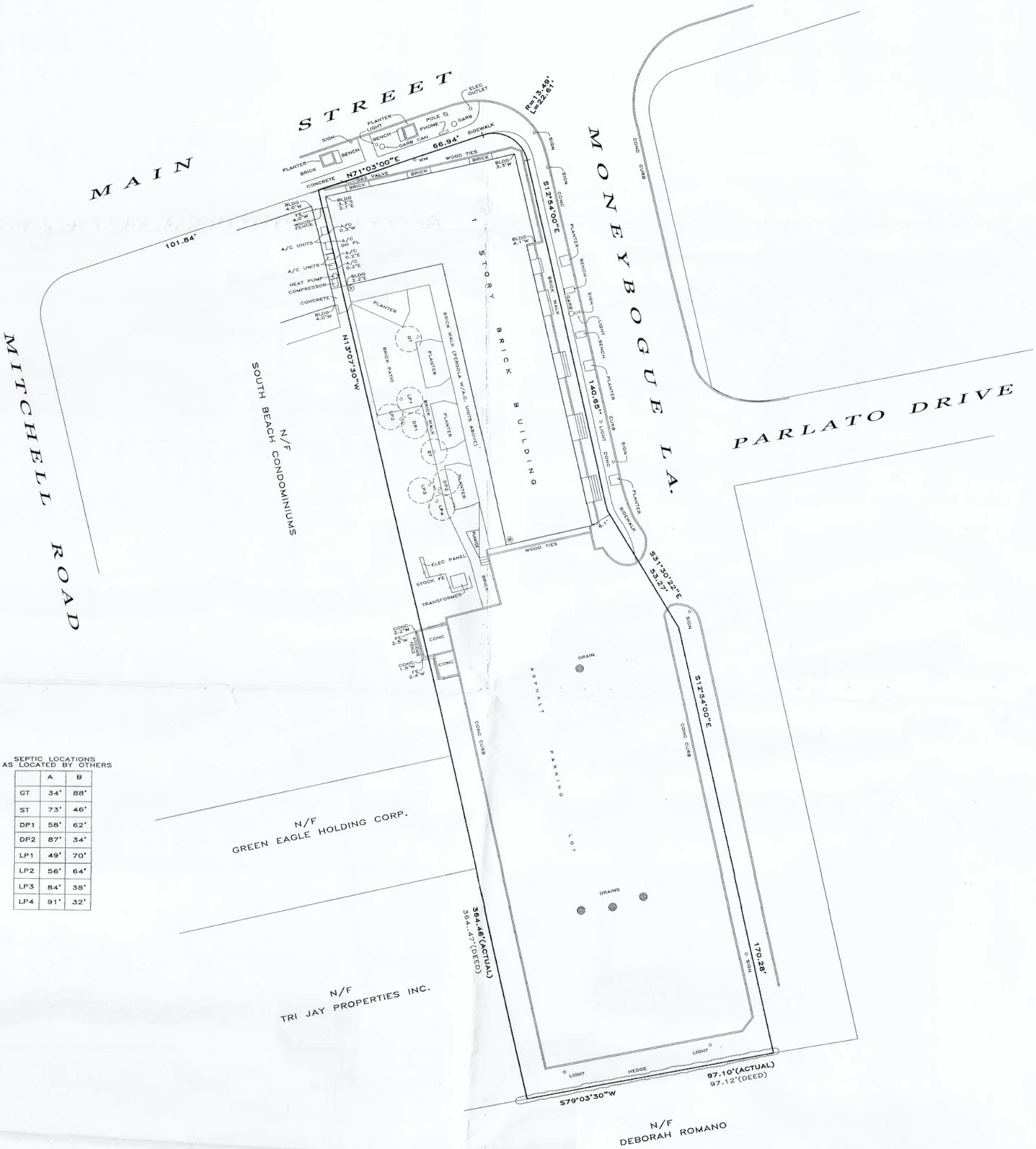


SEPTIC LOCATIONS
AS LOCATED BY OTHERS

| | A | B |
|---|---|---|
| GT | 34' | 88' |
| ST | 73' | 46' |
| DP1 | 58' | 62' |
| DP2 | 87' | 34' |
| LP1 | 49' | 70' |
| LP2 | 56' | 64' |
| LP3 | 84' | 38' |
| LP4 | 91' | 32' |

APPROVED BY
THE WESTHAMPTON BEACH
PLANNING BOARD
CHAIRMAN 6/14/15 DATE
Subject to all other required approvals and compliance with all of the codes of the Village of Westhampton Beach

D39-27
3/20/13

| TAX MAP | |
|---|---|
| DISTRICT | 0905 |
| SECTION | 011 - |
| BLOCK | 02 |
| LOT | 9 |

UNAUTHORIZED ALTERATION OR ADDITION TO A SURVEY MAP BEARING A LICENSED LAND SURVEYOR'S SEAL IS A VIOLATION OF SECTION 7209 SUB-DIVISION 2, OF THE NEW YORK STATE EDUCATION LAW.

ONLY COPIES FROM THE ORIGINAL OF THIS SURVEY MARKED WITH THE LAND SURVEYOR'S INK EMBOSSED SEAL SHALL BE CONSIDERED TO BE VALID TRUE COPIES.

CERTIFICATIONS INDICATED HEREON SHALL RUN TO THE PERSON FOR WHOM THE SURVEY IS PREPARED, AND TO THE BENEFIT OF THE LENDER AND TITLE COMPANY NAMED HEREON, AND TO THE GRANTEES OF THE LENDING INSTITUTION. CERTIFICATIONS NOT TRANSFERABLE TO ADDITIONAL INSTITUTIONS OR SUBSEQUENT OWNERS.

STATE OF NEW YORK
FLOYD CARRINGTON
049108
LICENSED LAND SURVEYOR

RAYNOR, MARCKS & CARRINGTON
SURVEYING
P.O. BOX 5027
QUOGUE, N.Y.
631-653-4066

77 MAIN STREET

AREA: 33,165 SQ.FT.
BK:172 PG:12

RECEIVED
MAR 20 2015
WESTHAMPTON BEACH
BUILDING & ZONING

MAP OF PROPERTY
FOR
*KARAMAR CO.*
SITUATE
*WESTHAMPTON BEACH*
TOWN OF SOUTHAMPTON – SUFFOLK COUNTY, N.Y.
SURVEYED: MARCH 5, 2010 – SCALE: 1" INCH = 20' FT.
ADD SEPTIC SYSTEM– JUNE 3, 2011
REDATE: MARCH 19, 2013

D39-27
3/20/13
DRAWN BY: JC/GD
(ARCHIV31 KARAMAR_10)

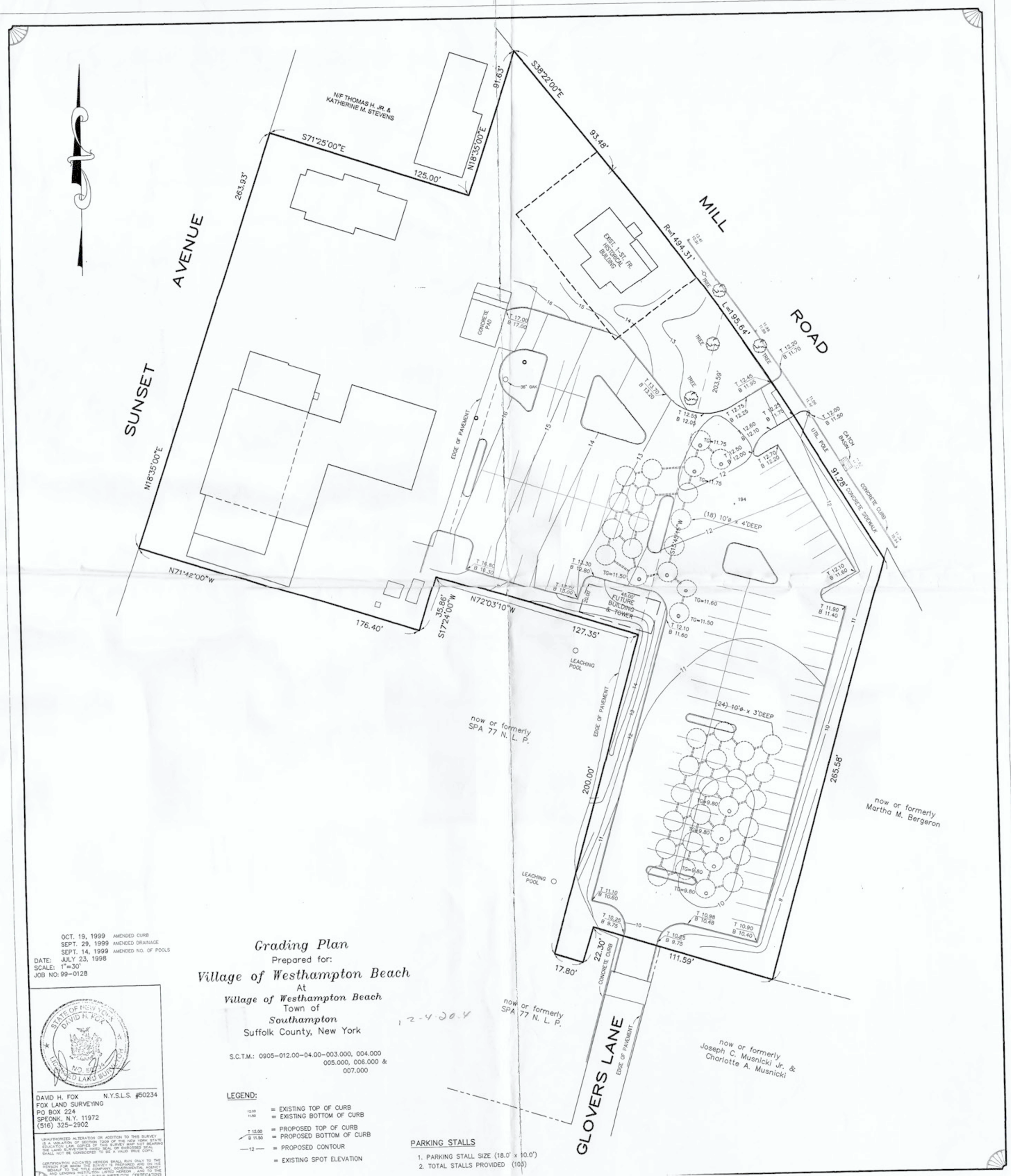


OCT. 19, 1999 AMENDED CURB
SEPT. 29, 1999 AMENDED DRAINAGE
SEPT. 14, 1999 AMENDED NO. OF POOLS
DATE: JULY 23, 1998
SCALE: 1"=30'
JOB NO: 99-0128

STATE OF NEW YORK DAVID H. FOX LICENSED LAND SURVEYOR NO. 50234

DAVID H. FOX N.Y.S.L.S. #50234
FOX LAND SURVEYING
PO BOX 224
SPEONK, N.Y. 11972
(516) 325-2902

UNAUTHORIZED ALTERATION OR ADDITION TO THIS SURVEY IS A VIOLATION OF SECTION 7209 OF THE NEW YORK STATE EDUCATION LAW. COPIES OF THIS SURVEY MAP NOT BEARING THE LAND SURVEYOR'S INKED SEAL OR EMBOSSED SEAL SHALL NOT BE CONSIDERED TO BE A VALID TRUE COPY.

CERTIFICATION INDICATED HEREON SHALL RUN ONLY TO THE PERSON FOR WHOM THE SURVEY IS PREPARED AND ON HIS BEHALF TO THE TITLE COMPANY, GOVERNMENTAL AGENCY AND LENDING INSTITUTION LISTED HEREON, AND TO THE

# *Grading Plan*

Prepared for:

## *Village of Westhampton Beach*

At

*Village of Westhampton Beach*
Town of
*Southampton*
Suffolk County, New York

12-4-2004

S.C.T.M.: 0905-012.00-04.00-003.000, 004.000
005.000, 006.000 &
007.000

LEGEND:

12.00 / 11.50 = EXISTING TOP OF CURB / EXISTING BOTTOM OF CURB
T 12.00 / B 11.50 = PROPOSED TOP OF CURB / PROPOSED BOTTOM OF CURB
—12— = PROPOSED CONTOUR
= EXISTING SPOT ELEVATION

PARKING STALLS

1. PARKING STALL SIZE (18.0' x 10.0')
2. TOTAL STALLS PROVIDED (103)

## LOCATION MAP

SCALE: 1"=600'

## LEGEND

-O- = EXISTING UTILITY POLE

*9.14 / 8.81 = EXISTING TOP OF CURB ELEVATION / EXISTING BOTTOM OF CURB ELEVATION

11.74 / 11.24 = PROPOSED TOP OF CURB ELEVATION / PROPOSED BOTTOM OF CURB ELEVATION

## NOTES

1. AREA = 10,728 S.F.
2. ZONING USE DISTRICT = B-1
3. PARKING PROVIDED: 28 SPACES
4. PROPOSED LOT COVERAGE: 4.3%
5. LOCATION OF AND VOLUME PROVIDED BY EXISTING STORMWATER DRAINAGE ON SITE IS UNKNOWN AT THE TIME OF SITE PLAN PREPERATION.

## TRIBUTARY AREA:

### REQUIRED

1,446/68.42 = 21.1 V.F.

PAVEMENT & SIDEWALK
8,148 S.F. x 1.00 x 2/12 = 1,358 C.F.

BUILDING
456 S.F. x 1.00 x 2/12 = 76 C.F.

LANDSCAPING
1,470 S.F. x 0.10 x 2/12 = 12 C.F.

TOTAL = 1,446 C.F.

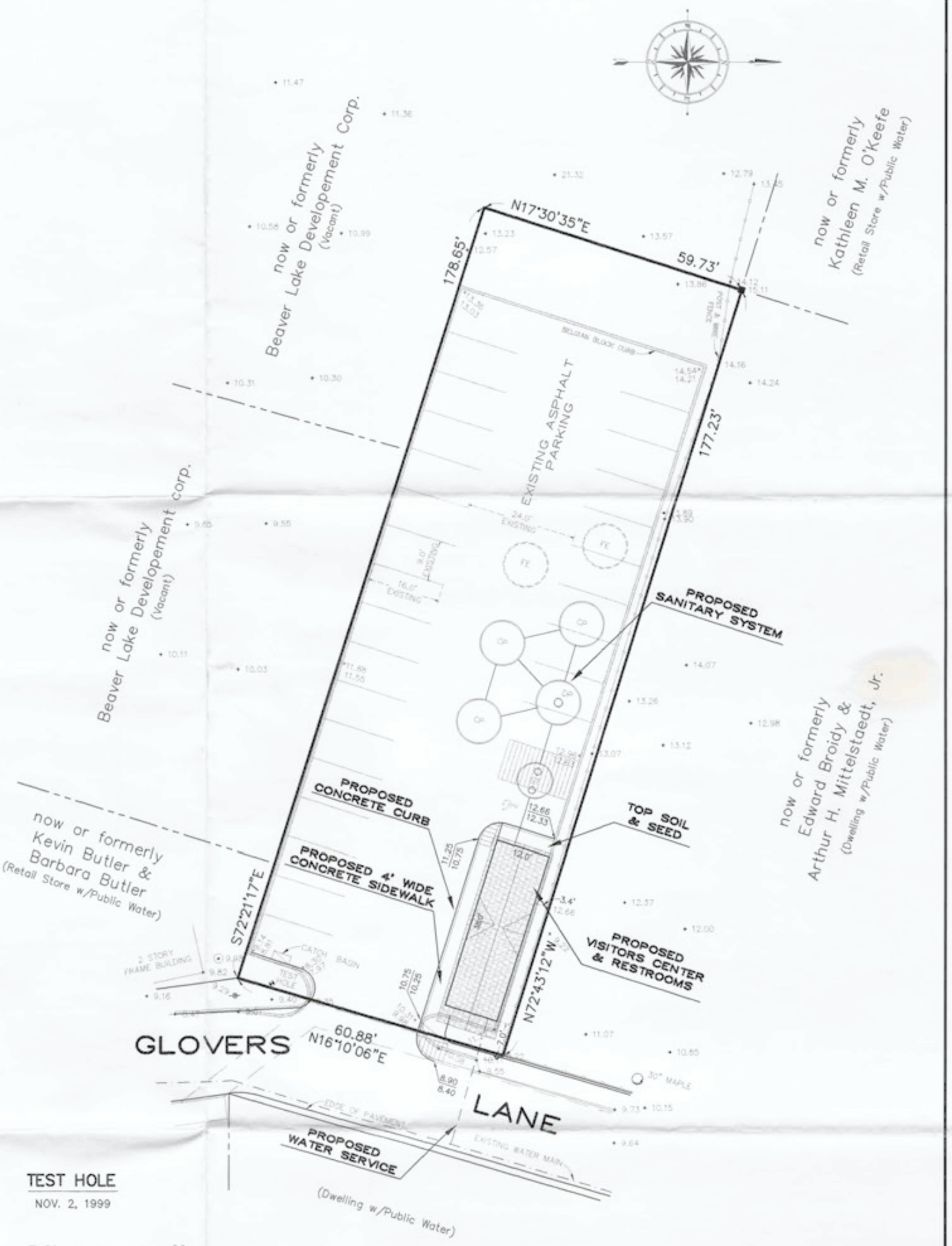


## TYPICAL SEWAGE DISPOSAL SYSTEM

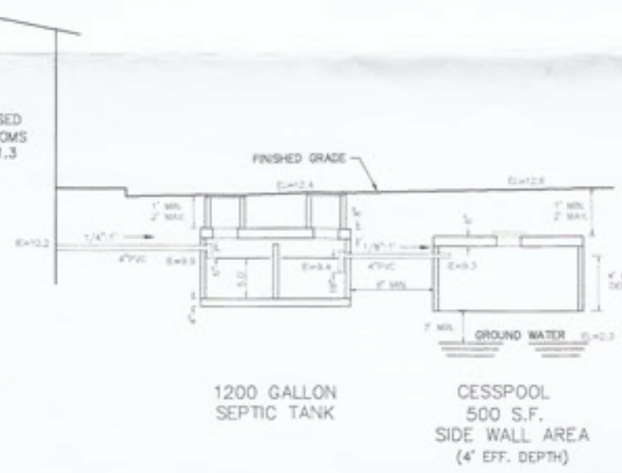


## TEST HOLE

NOV. 2, 1999

## DESIGN CRITERIA & CALCULATIONS

### ALLOWABLE SANITARY FLOW

GWM ZONE = VI
AREA = 0.246 AC.
0.246 x 300 G.P.D. = 74 G.P.D. (USE 300 G.P.D.)

### DESIGN SANITARY FLOW (DENSITY)

PUBLIC RESTROOM:
60 OCCUPANTS x 5 G.P.D. = 300 G.P.D.

### DESIGN SANITARY FLOW (SYSTEM DESIGN)

PUBLIC RESTROOM:
60 OCCUPANTS x 5 G.P.D. = 300 G.P.D.

### SEPTIC TANK

REQUIRED:
300 G.P.D. x 2 = 600 G.P.D.
PROVIDE:
(1) 8' DIA. x 5' EFF. DEPTH POOL = 1,200 G.P.D.

### CESSPOOLS

REQUIRED:
300/31.4 = 10 V.F.
PROVIDE:
(4) 10' DIA. x 4' EFF. DEPTH POOL = 16 V.F.

| DATE: | REVISION: |
|---|---|
| FEB. 07, 2000 | GENERAL AMENDMENTS |
| JAN. 19, 2000 | AMENDED SANITARY DESIGN |
| NOV. 24, 1999 | PLAN PREPARED |

# *SITE PLAN*

Prepared For:

*Village of Westhampton Beach*

*"Visitors Center & Restrooms"*

At

*Village of Westhampton Beach*
Town of
*Southampton*
Suffolk County, New York

Suff. Co. Tax Map:
Dist. 0905 Sect. 012.00 Block 04.00 Lot 017.000

SCALE: 1"=20'
JOB NO: 99-0227

STATE OF NEW YORK
DAVID H. FOX
NO. 50234
LICENSED LAND SURVEYOR


DAVID H. FOX N.Y.S.L.S. #50234
FOX LAND SURVEYING
PO BOX 224
SPEONK, N.Y. 11972
(516) 325-2902



UNAUTHORIZED ALTERATION OR ADDITION TO THIS SURVEY IS A VIOLATION OF SECTION 7209 OF THE NEW YORK STATE EDUCATION LAW. COPIES OF THIS SURVEY MAP NOT BEARING THE LAND SURVEYOR'S INKED SEAL OR EMBOSSED SEAL SHALL NOT BE CONSIDERED TO BE A VALID TRUE COPY.

CERTIFICATION INDICATED HEREON SHALL RUN ONLY TO THE PERSON FOR WHOM THE SURVEY IS PREPARED, AND ON HIS BEHALF TO THE TITLE COMPANY, GOVERNMENTAL AGENCY AND LENDING INSTITUTION LISTED HEREON, AND TO THE ASSIGNEES OF THE LENDING INSTITUTION. CERTIFICATIONS ARE NOT TRANSFERABLE TO ADDITIONAL INSTITUTIONS OR SUBSEQUENT OWNERS.


DWG: 990227

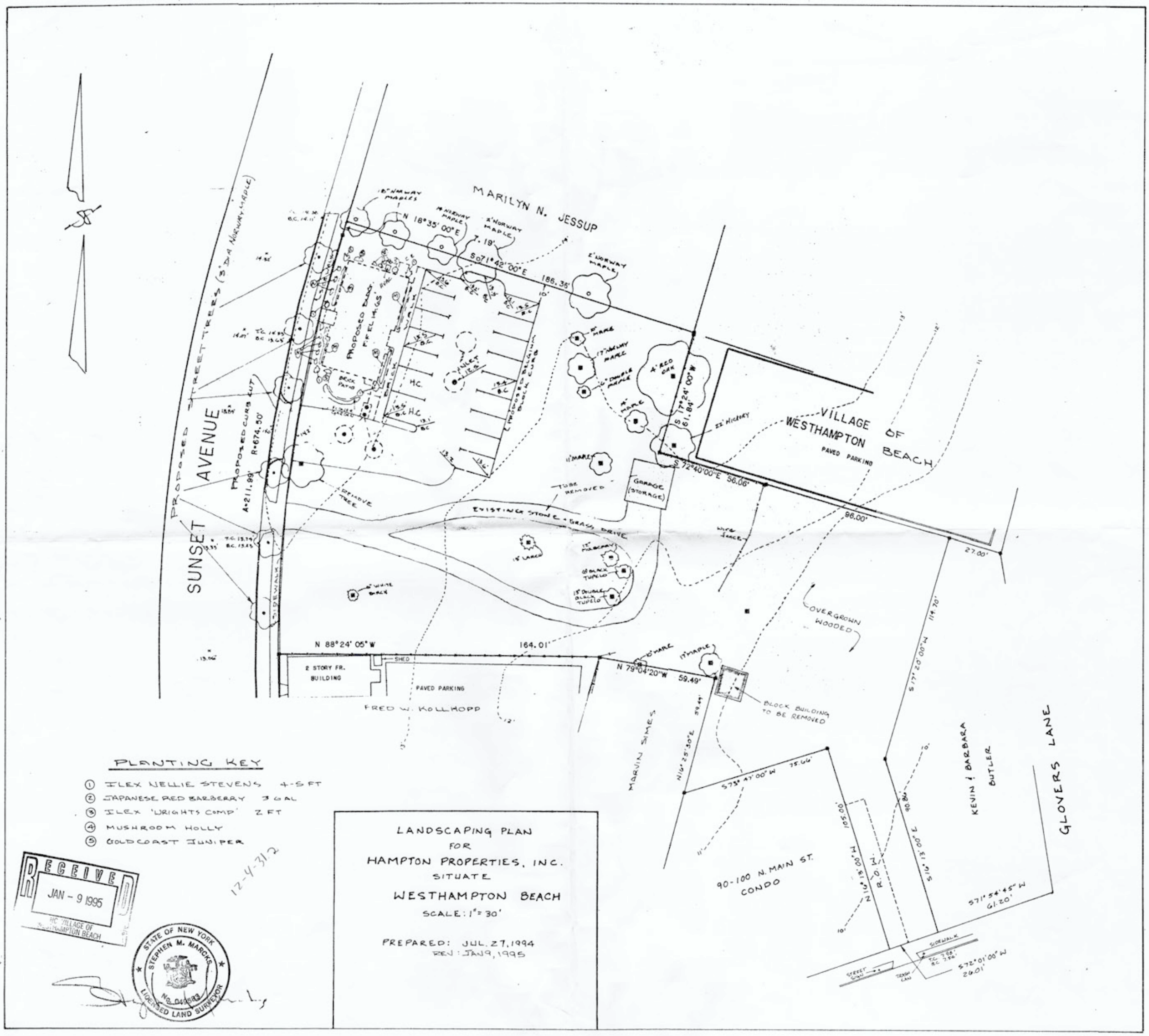
MARILYN N. JESSUP
N 18°35' 00"E
S 71°42' 00"E
186.36'
PROPOSED STREET TREES (3" DIA NORWAY MAPLE)
SUNSET AVENUE
PROPOSED CURB CUT
R=674.50'
A=211.99'
PROPOSED BLDG
FIREPLACE
BRICK PATIO
H.C.
INLET
PROPOSED BELGIAN BLOCK CURB
REMOVE TREE
TUBE REMOVED
EXISTING STONE & GRASS DRIVE
GARAGE (STORAGE)
S 17°24' 00"W
61.84'
S 72°40'00"E 56.06'
VILLAGE OF WESTHAMPTON BEACH
PAVED PARKING
96.00'
27.00'
WIRE FENCE
OVERGROWN WOODED
114.70'
S 17°20'00"W
N 88°24' 05"W
164.01'
SHED
2 STORY FR. BUILDING
PAVED PARKING
FRED W. KOLLHOPP
N 79°04'20"W
59.49'
BLOCK BUILDING TO BE REMOVED
MARVIN SIMES
N 16°25'30"E
59.49'
S 73°47'00"W
75.66'
90-100 N. MAIN ST. CONDO
N 16°38'00"E
105.00'
R.O.W.
S 16°38'00"E
90.80'
KEVIN & BARBARA BUTLER
GLOVERS LANE
S 71°54'45"W
61.20'
SIDEWALK
S 72°01'00"W
26.01'
STREET SIGN
TRASH CAN
PLANTING KEY
① ILEX NELLIE STEVENS 4-5 FT
② JAPANESE RED BARBERRY 3 GAL
③ ILEX 'WRIGHTS COMP' 2 FT
④ MUSHROOM HOLLY
⑤ GOLDCOAST JUNIPER
LANDSCAPING PLAN
FOR
HAMPTON PROPERTIES, INC.
SITUATE
WESTHAMPTON BEACH
SCALE: 1" = 30'
PREPARED: JUL. 27, 1994
REV: JAN 9, 1995
RECEIVED
JAN - 9 1995
RC VILLAGE OF WESTHAMPTON BEACH
12-4-31.2
STATE OF NEW YORK
STEPHEN M. MARCKS
No. 049583
LICENSED LAND SURVEYOR

D 33-2B

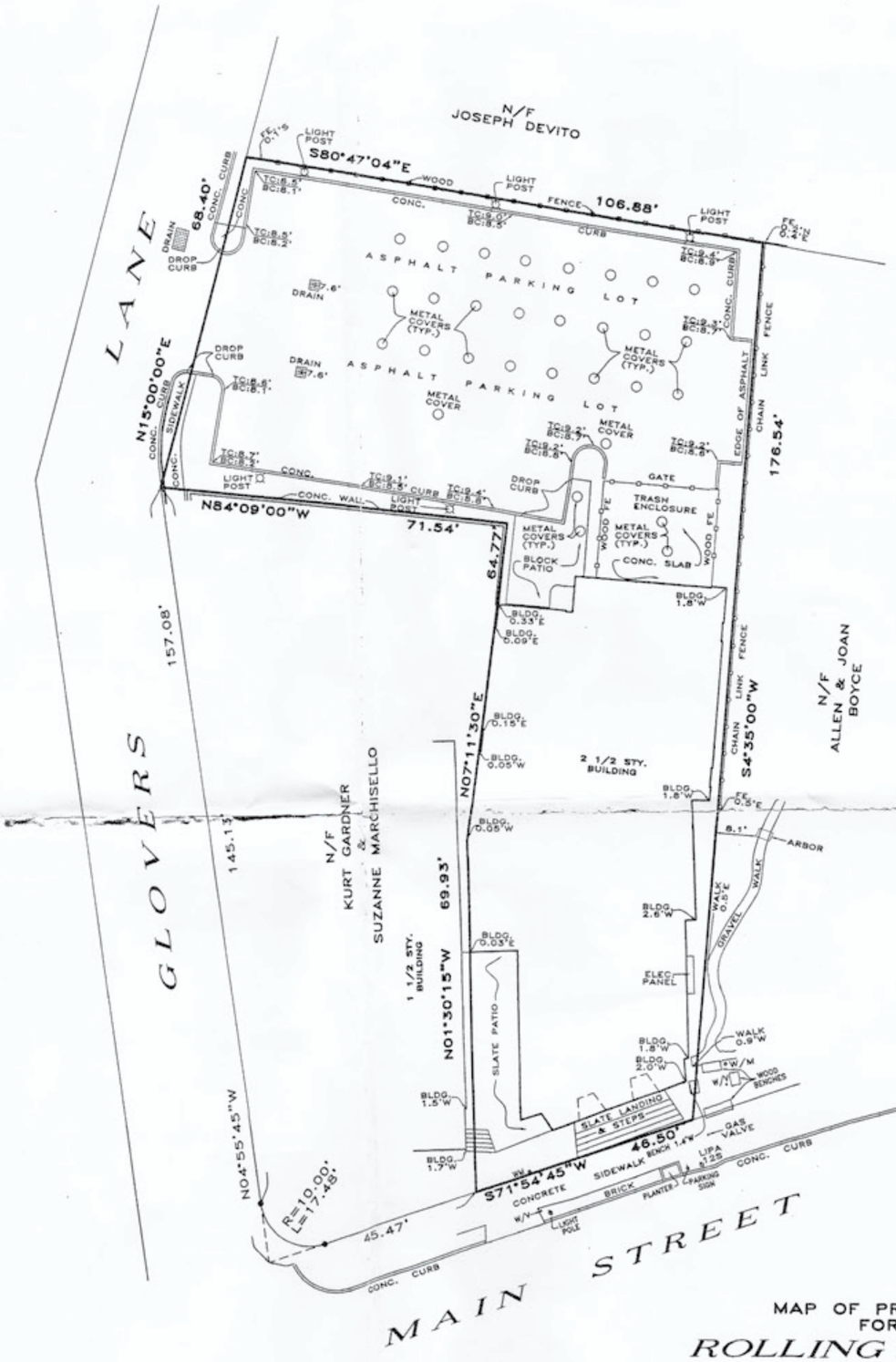


LOT COVERAGE AS OF 6/10/14

LOT AREA= 13,272 SQ.FT.
BUILDING, SLATE PATIO & LANDING
= 4,884 SQ.FT.
4,884 SQ.FT./13,272 SQ.FT.x100
= 36.8%

2014 JUN 12 P 3:56

D20-54-FINAL
6/10/14

| TAX MAP | |
|---|---|
| DISTRICT | 0905 |
| SECTION | 012 |
| BLOCK | 04 |
| LOT | 53.1 |

UNAUTHORIZED ALTERATION OR ADDITION TO A SURVEY MAP BEARING A LICENSED LAND SURVEYOR'S SEAL IS A VIOLATION OF SECTION 7209, SUB-DIVISION 2, OF THE NEW YORK STATE EDUCATION LAW.

ONLY COPIES FROM THE ORIGINAL OF THIS SURVEY MARKED WITH AN ORIGINAL OF THE LAND SURVEYOR'S INKED SEAL OR EMBOSSED SEAL SHALL BE CONSIDERED TO BE VALID TRUE COPIES.

CERTIFICATIONS INDICATED HEREON SHALL RUN ONLY TO THE PERSON FOR WHOM THE SURVEY IS PREPARED, AND ON HIS BEHALF TO THE TITLE COMPANY, GOVERNMENTAL AGENCY AND LENDING INSTITUTION LISTED HEREON, AND TO THE ASSIGNEES OF THE LENDING INSTITUTION. CERTIFICATIONS ARE NOT TRANSFERABLE TO ADDITIONAL INSTITUTIONS OR SUBSEQUENT OWNERS.

STATE OF NEW YORK
FLOYD CARRINGTON
049168
LICENSED LAND SURVEYOR

RAYNOR, MARCKS
&
CARRINGTON
SURVEYING
P.O. BOX 5027
QUOGUE, N.Y.
631-653-4066

112 MAIN STREET.

AREA: 13,272 SQ.FT.
BK:274 PG:17

MAP OF PROPERTY
FOR
*ROLLING PIN INC.*
SITUATE
*WESTHAMPTON BEACH*

TOWN OF SOUTHAMPTON - SUFFOLK COUNTY, N.Y.
SURVEYED: JUNE 3, 2004 - SCALE: 1" INCH = 20' FT.
AS BUILT: APRIL 11, 2013.
LOCATION & FINAL: JUNE 10, 2014

CERTIFIED TO:
ROLLING PIN INC.
JP MORGAN CHASE BANK

D20-54-FINAL
6/10/14
DRAWN BY: TK
(ARCHIV36 ROLLING_PIN_FINAL)

TEST HOLE DATA
AUG. 06, 2003
MCDONALD GEOSCIENCE

| | |
|---|---|
| EL=10.5 | 0.0 |
| BROWN SILTY SAND | 0.2 |
| PALE BROWN FINE TO MEDIUM SAND | 7.6 |
| WATER IN PALE BROWN FINE TO MEDIUM SAND | 17.0 |

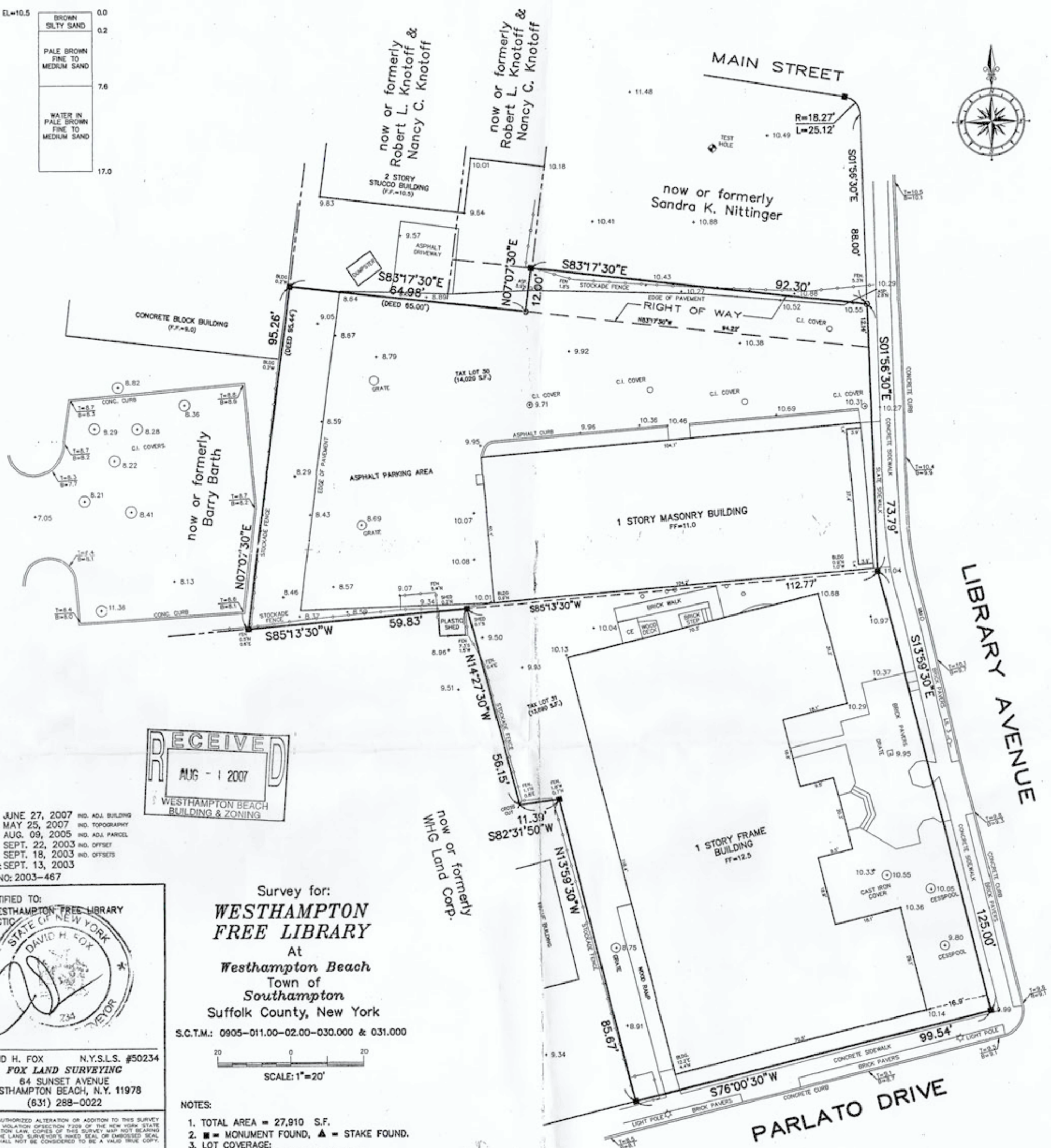


RECEIVED
AUG - 1 2007
WESTHAMPTON BEACH
BUILDING & ZONING

JUNE 27, 2007 IND. ADJ. BUILDING
MAY 25, 2007 IND. TOPOGRAPHY
AUG. 09, 2005 IND. ADJ. PARCEL
SEPT. 22, 2003 IND. OFFSET
SEPT. 18, 2003 IND. OFFSETS
DATE: SEPT. 13, 2003
JOB NO: 2003-467

CERTIFIED TO:
WESTHAMPTON FREE LIBRARY
SCTIC

STATE OF NEW YORK
DAVID H. FOX
234


DAVID H. FOX N.Y.S.L.S. #50234
*FOX LAND SURVEYING*
64 SUNSET AVENUE
WESTHAMPTON BEACH, N.Y. 11978
(631) 288-0022



UNAUTHORIZED ALTERATION OR ADDITION TO THIS SURVEY IS A VIOLATION OF SECTION 7209 OF THE NEW YORK STATE EDUCATION LAW. COPIES OF THIS SURVEY MAP NOT BEARING THE LAND SURVEYOR'S INKED SEAL OR EMBOSSED SEAL SHALL NOT BE CONSIDERED TO BE A VALID TRUE COPY.

CERTIFICATION INDICATED HEREON SHALL RUN ONLY TO THE PERSON FOR WHOM THE SURVEY IS PREPARED AND ON HIS BEHALF TO THE TITLE COMPANY, GOVERNMENTAL AGENCY AND LENDING INSTITUTION LISTED HEREON, AND TO THE ASSIGNEES OF THE LENDING INSTITUTION. CERTIFICATIONS ARE NOT TRANSFERABLE TO ADDITIONAL INSTITUTIONS OR SUBSEQUENT OWNERS.


Survey for:

# *WESTHAMPTON FREE LIBRARY*

At
***Westhampton Beach***
Town of
***Southampton***
Suffolk County, New York

S.C.T.M.: 0905-011.00-02.00-030.000 & 031.000

20 0 20
SCALE: 1"=20'

NOTES:

1. TOTAL AREA = 27,910 S.F.
2. ■ = MONUMENT FOUND, ▲ = STAKE FOUND.
3. LOT COVERAGE:
   TAX LOT 30 = 4053 S.F. OR 14.5%
   TAX LOT 31 = 7487 S.F. OR 26.8%
   TOTAL LOT 30 & 31 = 11540 S.F. OR 41.3%

DWG: 2005-574

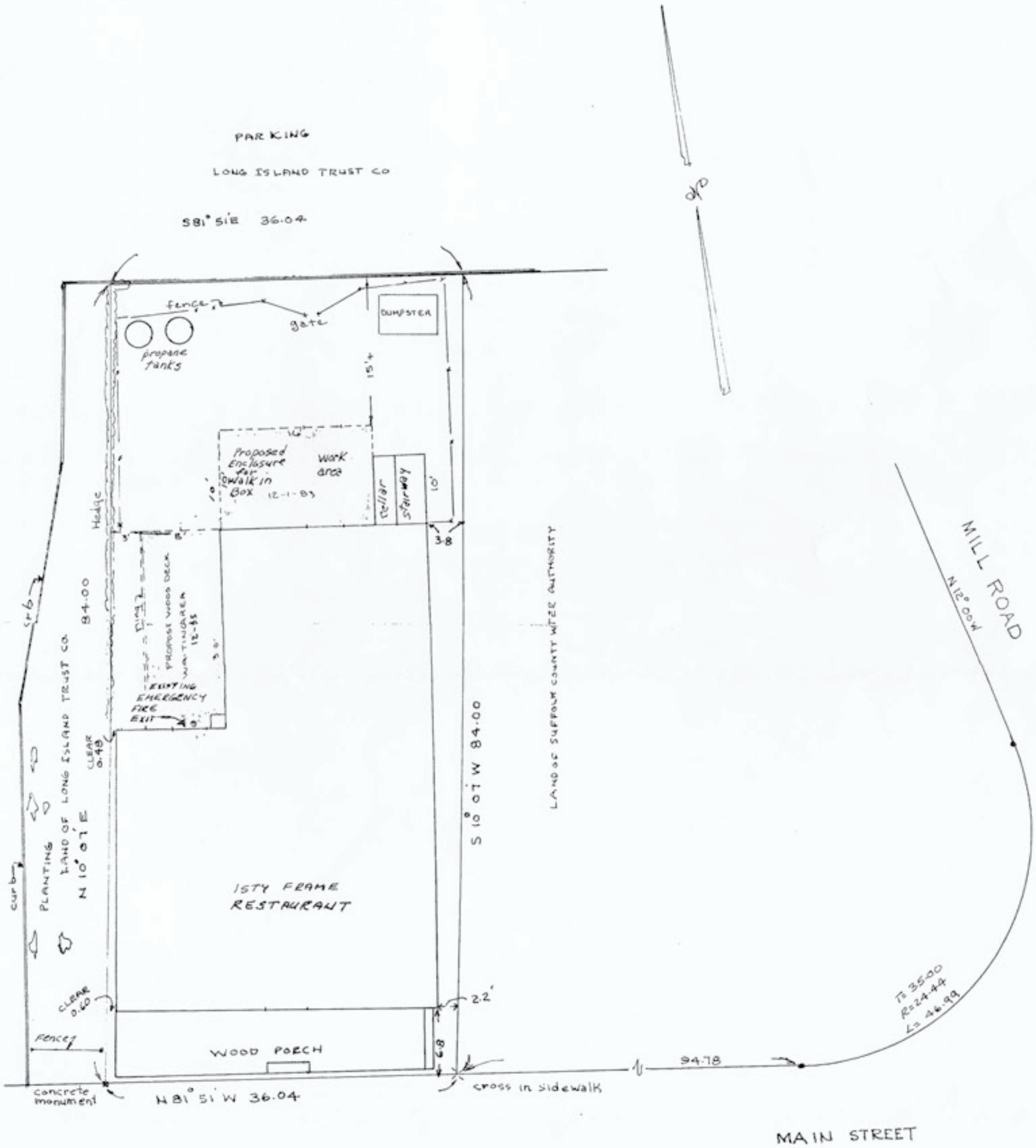


# MAP OF PROPERTY
## POST STOP INN
SITUATE
## WESTHAMPTON BEACH

TOWN OF SOUTHAMPTON, SUFFOLK COUNTY, NEW YORK

SURVEYED DEC 2 1969, OCT 5 1983, SCALE 1 INCH = 10 FEET

TAX MAP
0905
012
4
40

RAYNOR & MARCKS
SURVEYING & ENGINEERING
QUOGUE, N.Y.

STATE OF NEW YORK
CHARLES MARVIN RAYNOR
NO. 36187
LICENSED LAND SURVEYOR

SUFFOLK CO. SANITARY CODE ARTICLE 6
GROUNDWATER MANAGEMENT ZONE IV
ALLOWABLE SANITARY FLOW RATE
= 600 GPD / ACRE EQUIVALENT
SITE ACREAGE 1.2773 ACRES
ALLOWABLE SANITARY FLOW
= 600 GPD/ACRE X 1.2773 ACRE = 766.0 SQ.FT.

MILL RD.

INC. VILLAGE OF WESTHAMPTON BEACH

MARTIN STALLER TRUST

KATHLEEN O'KEEFE

N18° 35' 00" E 7.19'

S 71° 42' 00" E 186.36'

LOT 1 16,842 SQ FT ±

LOT 2 15,150 SQ FT. ±

LOT 3 23,647 SQ FT TOTAL

18,235 SQ FT ± PROPOSED TO BE ACQUIRED BY WESTHAMPTON BEACH FOR MUNICIPAL PARKING

VILLAGE OF WESTHAMPTON BEACH

S 72° 40' 00" E 152.06'

S 17° 24' 00" W 61.84'

S 17° 20' 00" W 114.70'

N 88° 24' 05" W 164.01'

N 79° 04' 20" W 59.49'

N 16° 25' 30" E 59.49'

FRED W. KOLLHOP

MARVIN SIMES

SHIZ SQ FT TO BE RETAINED

RELOCATED 10 FT R.O.W.

N 73° 47' 00" 75.66'

N 16° 13' 00" W 105.00'

PROPOSED 20' x 100' BLDG

10 FT R.O.W. TO BE RELOCATED

90-100 N. MAIN ST CONDO

S 16° 13' 00" E 90.86'

S 72° 01' 00" W 26.01'

KEVIN & BARBARA BUTLER

SUNSET AVENUE

PUBLIC WATER

LANE

STOVER

PUBLIC WATER MAIN STREET

TEST HOLE 8-6-90

TOP SOIL
BROWN LOAM
SANDY LOAM
SAND
GRAVEL WATER

TAX MAP
DISTRICT: 0905
SECTION: 012
BLOCK: 04
LOT: 25

PRELIMINARY SUBDIVISION FOR HAMPTON PROPERTIES
SITUATE
WEST HAMPTON BEACH
TOWN OF SOUTHAMPTON, SUFFOLK CO, N.Y.
PREPARED: 4/16/96

AREA = 1.2773 ACRES
1" = 30' SCALE
3 LOTS PROPOSED
B-1 ZONING

RAYNOR & MARCKS SURVEYORS, P.C.
QUOGUE, N.Y.
516-653-4066

STATE OF NEW YORK
STEPHEN M. MARCKS
No. 049583
LICENSED LAND SURVEYOR

RECEIVED
APR 18 1996
INC. VILLAGE OF WESTHAMPTON BEACH
BUILDING DEPARTMENT

D33-2

# EXHIBIT B

FEMA Flood Insurance Rate Map (FIRM)

# NOTES TO USERS

This map is for use in administering the National Flood Insurance Program. It does not necessarily identify all areas subject to flooding, particularly from local drainage sources of small size. The **community map repository** should be consulted for possible updated or additional flood hazard information.

To obtain more detailed information in areas where **Base Flood Elevations** (BFEs) and/or **floodways** have been determined, users are encouraged to consult the Flood Profiles and Floodway Data and/or Summary of Stillwater Elevations tables contained within the Flood Insurance Study (FIS) report that accompanies this FIRM. Users should be aware that BFEs shown on the FIRM represent rounded whole-foot elevations. These BFEs are intended for flood insurance rating purposes only and should not be used as the sole source of flood elevation information. Accordingly, flood elevation data presented in the FIS report should be utilized in conjunction with the FIRM for purposes of construction and/or floodplain management.

**Coastal Base Flood Elevations** (BFEs) shown on this map apply only landward of 0.0' North American Vertical Data of 1988 (NAVD 88). Users of this FIRM should be aware that coastal flood elevations are also provided in the Summary of Stillwater Elevations and Transect Data tables in the Flood Insurance Study report for this jurisdiction. Elevations shown in the Summary of Stillwater Elevations and Transect Data tables should be used for construction and/or floodplain management purposes when they are higher than the elevations shown on this FIRM.

Boundaries of the **floodways** were computed at cross sections and interpolated between cross sections. The floodways were based on hydraulic considerations with regard to requirements of the National Flood Insurance Program. Floodway widths and other pertinent floodway data are provided in the Flood Insurance Study report for this jurisdiction.

Certain areas not in Special Flood Hazard Areas may be protected by **flood control structures**. Refer to Section 2.4 "Flood Protection Measures" of the Flood Insurance Study report for information on flood control structures for this jurisdiction.

The **projection** used in the preparation of this map was New York State Plane FIPSZONE 3104. The **horizontal datum** was NAD 83, GRS80 spheroid. Differences in datum, spheroid, projection or State Plane zones used in the production of FIRMs for adjacent jurisdictions may result in slight positional differences in map features across jurisdiction boundaries. These differences do not affect the accuracy of this FIRM.

Flood elevations on this map are referenced to the North American Vertical Datum of 1988. These flood elevations must be compared to structure and ground elevations referenced to the same **vertical datum**. For information regarding conversion between the National Geodetic Vertical Datum of 1929 and the North American Vertical Datum of 1988, visit the National Geodetic Survey website at http://www.ngs.noaa.gov or contact the National Geodetic Survey at the following address:

NGS Information Services
NOAA, N/NGS12
National Geodetic Survey
SSMC-3, #9202
1315 East-West Highway
Silver Spring, Maryland 20910-3182
(301) 713-3242

To obtain current elevation, description, and/or location information for **bench marks** shown on this map, please contact the Information Services Branch of the National Geodetic Survey at **(301) 713-3242**, or visit its website at http://www.ngs.noaa.gov.

**Base map** information shown on this FIRM was provided in digital format by the New York State Office of Cyber Security and Critical Infrastructure Coordination. This information was derived from digital orthophotography produced at a 1.0-foot pixel resolution from photography dated 2004.

Based on updated topographic information, this map reflects more detailed and up-to-date **stream channel configurations and floodplain delineations** than those shown on the previous FIRM for this jurisdiction. As a result, the Flood Profiles and Floodway Data tables for the Northeast Branch Nissequogue River in the Flood Insurance Study Report (which contains authoritative hydraulic data) may reflect stream channel distances that differ from what is shown on this map. Also, the road to floodplain relationships for unrevised streams may differ from what is shown on previous maps.

**Corporate limits** shown on this map are based on the best data available at the time of publication. Because changes due to annexations or de-annexations may have occurred after this map was published, map users should contact appropriate community officials to verify current corporate limit locations.

Please refer to the separately printed **Map Index** for an overview map showing the layout of map panels for this jurisdiction.

The AE Zone category has been divided by a **Limit of Moderate Wave Action (LiMWA)**. The LiMWA represents the approximate landward limit of the 1.5-foot breaking wave. The effects of wave hazards between the VE Zone and the LiMWA (or between the shoreline and the LiMWA for areas where VE Zones are not identified) will be similar to, but less severe than those in the VE Zone.

Contact the **FEMA Map Service Center** at 1-800-358-9616 for information on available products associated with this FIRM. Available products may include previously issued Letters of Map Change, a Flood Insurance Study report, and/or digital versions of this map. The FEMA Map Service Center may also be reached by Fax at 1-800-358-9620 and its website at http://msc.fema.gov.

If you have **questions about this map** or questions concerning the National Flood Insurance Program in general, please call **1-877-FEMA MAP** (1-877-336-2627) or visit the FEMA website at http://www.fema.gov/business/nfip.

# LEGEND

SPECIAL FLOOD HAZARD AREAS SUBJECT TO INUNDATION BY THE 1% ANNUAL CHANCE FLOOD

The 1% annual flood (100-year flood), also known as the base flood, is the flood that has a 1% chance of being equaled or exceeded in any given year. The Special Flood Hazard Area is the area subject to flooding by the 1% annual chance flood. Areas of Special Flood Hazard include Zones A, AE, AH, AO, AR, A99, V, and VE. The Base Flood Elevation is the water-surface elevation of the 1% annual chance flood.

| | |
|---|---|
| ZONE A | No Base Flood Elevations determined. |
| ZONE AE | Base Flood Elevations determined. |
| ZONE AH | Flood depths of 1 to 3 feet (usually areas of ponding); Base Flood Elevations determined. |
| ZONE AO | Flood depths of 1 to 3 feet (usually sheet flow on sloping terrain); average depths determined. For areas of alluvial fan flooding, velocities also determined. |
| ZONE AR | Special Flood Hazard Area formerly protected from the 1% annual chance flood by a flood control system that was subsequently decertified. Zone AR indicates that the former flood control system is being restored to provide protection from the 1% annual chance or greater flood. |
| ZONE A99 | Area to be protected from 1% annual chance flood by a Federal flood protection system under construction; no Base Flood Elevations determined. |
| ZONE V | Coastal flood zone with velocity hazard (wave action); no Base Flood Elevations determined. |
| ZONE VE | Coastal flood zone with velocity hazard (wave action); Base Flood Elevations determined. |

FLOODWAY AREAS IN ZONE AE

The floodway is the channel of a stream plus any adjacent floodplain areas that must be kept free of encroachment so that the 1% annual chance flood can be carried without substantial increases in flood heights.

OTHER FLOOD AREAS

ZONE X — Areas of 0.2% annual chance flood; areas of 1% annual chance flood with average depths of less than 1 foot or with drainage areas less than 1 square mile; and areas protected by levees from 1% annual chance flood.

OTHER AREAS

ZONE X — Areas determined to be outside the 0.2% annual chance floodplain.

ZONE D — Areas in which flood hazards are undetermined, but possible.

COASTAL BARRIER RESOURCES SYSTEM (CBRS) AREAS

OTHERWISE PROTECTED AREAS (OPAs)

CBRS areas and OPAs are normally located within or adjacent to Special Flood Hazard Areas.

1% annual chance floodplain boundary

0.2% annual chance floodplain boundary

Floodway boundary

Zone D boundary

CBRS and OPA boundary

Boundary dividing Special Flood Hazard Area Zones and boundary dividing Special Flood Hazard Areas of different Base Flood Elevations, flood depths or flood velocities.

Limit of Moderate Wave Action

513 — Base Flood Elevation line and value; elevation in feet*

(EL 987) — Base Flood Elevation value where uniform within zone; elevation in feet*

* Referenced to the North American Vertical Datum of 1988

| | |
|---|---|
| A — A | Cross section line |
| 3 — 3 | Limited detail cross section line |
| 23 - - - - 23 | Transect line |
| 87°07'45", 32°22'30" | Geographic coordinates referenced to the North American Datum of 1983 (NAD 83), Western Hemisphere |
| 4076000mN | 1000-meter Universal Transverse Mercator grid values, zone 18 |
| 600000 FT | 5000-foot grid values: statename State Plane coordinate system, spzone (FIPSZONE fipszone), spherename projection |
| DX5510 × | Bench mark (see explanation in Notes to Users section of this FIRM panel) |
| • M1.5 | River Mile |

MAP REPOSITORY
Refer to listing of Map Repositories on Map Index

EFFECTIVE DATE OF COUNTYWIDE
FLOOD INSURANCE RATE MAP
May 4, 1998

EFFECTIVE DATE(S) OF REVISION(S) TO THIS PANEL
September 25, 2009 - to change Special Flood Hazard Areas, to incorporate Primary Frontal Dune analysis, to reflect revised shoreline, to change zone designations, to update the effects of wave action, to change Base Flood Elevations, to update map format, to reflect the effects of coastal erosion, and to reflect updated topographic information

To determine if flood insurance is available in this community, contact your Insurance agent or call the National Flood Insurance Program at 1-800-638-6620.

**MAP SCALE 1" = 500'**

250 0 500 1000 FEET

150 0 150 300 METERS

NFIP

NATIONAL FLOOD INSURANCE PROGRAM

**PANEL 0767H**

# FIRM

**FLOOD INSURANCE RATE MAP**

for SUFFOLK COUNTY, NEW YORK
(ALL JURISDICTIONS)

CONTAINS:

| COMMUNITY | NUMBER |
|---|---|
| SOUTHAMPTON, TOWN OF | 365342 |
| WESTHAMPTON BEACH, VILLAGE OF | 365345 |

**PANEL 767 OF 1026**
**MAP SUFFIX: H**
(SEE MAP INDEX FOR FIRM PANEL LAYOUT)

Notice to User: The **Map Number** shown below should be used when placing map orders; the **Community Number** shown above should be used on insurance applications for the subject community.

**MAP NUMBER**
**36103C0767H**

**MAP REVISED**
**SEPTEMBER 25, 2009**

Federal Emergency Management Agency

# EXHIBIT C

Map & Plan: Formation of Inc. Village of Westhampton Beach Sewer System (Phase 1 Sewer Service Area) for Moniebogue Bay

# MAP & PLAN

## Formation of The Inc. Village of Westhampton Beach Sewer System (Phase 1 Sewer Service Area) For Moniebogue Bay

H2M Project No.
WHBV 16-01

Final

**OCTOBER 2017**

**Prepared for:**

Mayor Maria Z. Moore and Board of Trustees
Inc. Village of Westhampton Beach
165 Mill Road
Westhampton Beach, NY 11967

**Prepared by:**

H2M architects + engineers
538 Broad Hollow Road, 4th Floor East
Melville, New York 11747

**In Association With:**

*Cameron Engineering & Associates, LLP*

STATE OF NEW YORK
CHRISTOPHER A. WEISS
072204
LICENSED PROFESSIONAL ENGINEER
11/1/17

H 2 M architects + engineers

## EXECUTIVE SUMMARY

This Map & Plan has been prepared in accordance with the engineering requirements contained in Article 14, Section 1400 of New York State Village Law to establish a municipal sewer system within the Incorporated Village of Westhampton Beach (Village). A "sewer system" is the legal terminology, in accordance with New York State Law, that is used to define sanitary infrastructure servicing a Village.

The Incorporated Village of Westhampton Beach Sewer system (sewer system) will encompass all properties within the Village. The initial "service area" will include 156 tax lots that will be provided with centralized sanitary collection and conveyance infrastructure. The properties within the Phase 1 service area are generally located along Main Street within the core business area of the Village. The existing onsite sanitary wastewater disposal systems within this core business area are impacted by shallow groundwater and are identified as a concentrated source of nitrogen to groundwater within the Village, and have been directly linked to the ongoing degradation of Moniebogue Bay as recently confirmed by a report titled *Quantifying Nitrogen Loading from Village of Westhampton Beach to Surrounding Water Bodies and their Mitigation by Creating a Sewer District* that was prepared by Christopher J. Gobler, PhD from the Stony Brook University School of Marine and Atmospheric Sciences, dated June 2017.

Establishing the sewer system service area will provide the infrastructure required to collect and convey sanitary wastewater generated within the core commercial area of the Village to the existing sewage treatment plant located within Suffolk County Sewer District 24 – Gabreski Airport (SCSD #24). Collection and conveyance of sanitary wastewater from the Village to an existing treatment plant in SCSD #24 will help reduce the effects of excessive nitrogen loading to groundwater and contribute to the improvement of water quality within Moniebogue Bay and the associated watershed. Future expansion of the service area collection and conveyance infrastructure as well as installation of Innovative and Alternative Onsite Wastewater Treatment Systems (I/A OWTS) throughout the Village are also included as part of the long-term sewer system plans of the Village.

The main objective of establishing the sewer system is to protect public health and improve environmental conditions by decreasing the nitrogen loading rate attributed to existing onsite wastewater disposal systems from continuing to negatively impact groundwater and surface water bodies within and surrounding the Village. Other benefits that can be realized include improved social conditions and opportunity for minimal economic growth without increasing the net nitrogen load into the environment. Storm water runoff, fertilizer usage, water fowl and sediment flux are other factors that contribute to the degradation of both groundwater and surface water within and surrounding the Village that must be acted upon as part of an overall program to improve water quality to fully realize the benefits associated with nitrogen load reduction.

This Map & Plan presents the service area boundaries, sanitary flow projections, engineering analyses and investigations, cost opinions, and associated tax implications for the residents and businesses within the sewer system boundary and sewer service area boundary to construct, operate, and maintain the sanitary infrastructure. The detailed analyses and plans presented herein represent the initial build-out plan for the sewer system, referred to as Phase 1. Future phased build-out plans are also discussed hereinafter.

Sanitary flow projections and analyses are prepared in accordance with the *Recommended Standards for Wastewater Facilities 2004 Edition* (*Ten States Standards*) and Suffolk County Department of Health Services (SCDHS) Standards. The total project cost opinion is based on the Phase 1 service area infrastructure requirements and has been escalated to reflect inflation to the anticipated date of construction. The cost opinion includes contingencies to account for the level of design detail known at this conceptual stage of the engineering design process for this project.

This report must be approved by the Village Board, the New York State Commissioner of Health, New York State Comptroller, and Suffolk County Department of Health Services (SCDHS) to establish the official boundaries and identify the financial burden to benefitted properties.

The process to form the Village of Westhampton Sewer system is a legal process and this Map & Plan is just one step in the formation procedure. It is incumbent upon the Village Board to authorize legal counsel to seek NYS approval in accordance with NYS Law and to follow the procedure required by law.

# TABLE OF CONTENTS

1.0 BACKGROUND ..... 1
1.1 Purpose of Forming the Village of Westhampton Beach Sewer system ..... 2
1.2 Current Regulatory Statutes ..... 3
1.3 Sewer Service Area ..... 4
2.0 SANITARY FLOW PROJECTIONS ..... 4
2.1 Introduction ..... 4
2.2 Sanitary Flow Analysis ..... 4
3.0 TECHNICAL INFORMATION ..... 5
3.1 Collection System Options ..... 5
3.1.1 Option 1: Gravity Sewers ..... 6
3.1.2 Option 2: Vacuum Sewers ..... 6
3.1.3 Option 3: Low Pressure Sewers ..... 7
3.1.4 Selected Collection System Option ..... 8
3.1.5 Preliminary Collection System Design ..... 9
3.2 Wastewater Treatment Alternatives ..... 9
3.2.1 Preliminary Wastewater Treatment Expansion Design ..... 10
4.0 LEGAL CONSIDERATIONS AND MAP & PLAN ..... 10
4.1 Formation Requirements ..... 10
4.2 Regulatory Requirements ..... 14
4.3 SEQRA & SHPO Compliance ..... 14
4.4 SPDES Permitting ..... 14
4.5 Other Project-Related Permits ..... 15
5.0 ANTICIPATED PROJECT SCHEDULE ..... 15
6.0 TOTAL PROJECT COST OPINION ..... 16
6.1 Introduction- Capital Construction and Soft Costs ..... 16
6.2 Estimated Operation and Maintenance Costs (Sewer Rent) ..... 17
7.0 FINANCIAL IMPACT TO INC. VILLAGE OF WESTHAMPTON BEACH ..... 17
7.1 Total Project Cost Debt Service ..... 17
7.2 Apportionment of Costs for Village of Westhampton Beach Sewer System ..... 18
8.0 AFFORDABILITY SUMMARY ..... 20

## TABLES

TABLE 1 Sanitary Flow Derivation based on SCWA Usage Records
TABLE 2 SCTM Properties within the Proposed Phase 1 Service Area
TABLE 3 Preliminary & Aggressive Project Schedule
TABLE 4 Total Project Cost (Present Day – 2017 versus Escalation – 2022)
TABLE 5 Sewer District Assessment (Tax) Summary

## FIGURES

FIGURE 1 Inc. Village of Westhampton Beach Overview Map
FIGURE 2 Inc. Village of Westhampton Beach Sewer System Map
FIGURE 3 Phase 1 Service Area Infrastructure Layout & Design Flow Summary

## APPENDICES

APPENDIX A Quantifying Nitrogen Loading to from Village of Westhampton Beach to surrounding Water Bodies and their Mitigation by Creating a Sewer District, prepared by Dr. Christopher J. Gobler, PhD
APPENDIX B Draft copy of Suffolk County Sanitary Code Article 19
APPENDIX C Suffolk County Sewer Agency Resolution No. 43-2017
APPENDIX D SCDPW approval correspondence for proposed Gabreski STP expansion design
APPENDIX E Preliminary Engineering Process Design Summary for Gabreski STP expansion
APPENDIX F Expanded Environmental Assessment, prepared by Cameron Engineering and Associates, LLC.
APPENDIX G SHPO Letter

## 1.0 BACKGROUND

The Incorporated Village of Westhampton Beach (Village) is both a home and a destination for many on the East End of Long Island. Incorporated in 1928, the Village is located in the southwest portion of the Town of Southampton (Town) and makes up approximately 1,761 of the 89,728 acres that is the entire Town (refer to **Figure 1** for an overview map of the Village). The Village has a deeply rooted sense of being connected with the water due to the close proximity of its Main Street area to East Moriches Bay, Moniebogue Bay and Quantuck Bay. Once a booming and lively community, the Village has seen a downward trend of business and pedestrian activity over the past decade. The nearby water bodies have seen an increased frequency of red, brown and rust tides and have been deemed impaired by New York State Department of Environmental Conservation (NYSDEC). It has been inferred from recent studies that the impairment of these water bodies stems from high nutrient loading due to antiquated septic systems serving the surrounding homes and businesses via groundwater inflow.

The Suffolk County Comprehensive Water Resources Management Plan (Plan), prepared in 2015, acknowledged continued use of conventional onsite sanitary wastewater disposal systems and fertilizer application as significant contributors of nitrogen loading to groundwater within Suffolk County.[1] Other contaminants such as pathogens, volatile organic compounds (VOCs), phosphates, pharmaceuticals, and personal care products were also identified as constituents of concern from conventional onsite sanitary disposal systems. The Plan concluded that proper management of all water resources will be necessary to improve groundwater quality, surface water quality, potable supply and coastal resiliency. The Plan also indicated that successful implementation of protective measures for the County's water resources would heavily rely on the involvement of all stakeholders. For this reason, the Village of Westhampton Beach has taken the lead in addressing the protection of water resources on a local level by commissioning this Map and Plan as well as its own environmental study.

The Village commissioned Dr. Christopher J. Gobler, PhD (Dr. Gobler), from Stony Brook University School of Marine and Atmospheric Sciences in 2016, to conduct a study to identify and quantify sources of nutrient loading specific to East Moriches Bay, Moniebogue Bay and Quantuck Bay. Dr. Gobler's findings confirmed that wastewater generated within the Village is the largest source of nitrogen to the surrounding surface waters by contributing 49% of the total nitrogen load to East Moriches Bay, 70% of the total nitrogen load to Moniebogue Bay, and 53% of the total nitrogen load to Quantuck Bay. The study further went on to target areas within the Village that would result in the greatest reduction to the overall nutrient load by providing enhanced wastewater treatment. The high density of nutrient load was identified to align with the properties in the core commercial area of the Village. The detailed analysis and findings of Dr. Gobler's study are documented in a report titled, *Quantifying Nitrogen Loading to from Village of Westhampton Beach to Surrounding Water Bodies and Their Mitigation by Creating a Sewer District* [2]. A copy of this report is included as **Appendix A**.

Concurrent with Dr. Gobler's study, the Mayor and Board of Trustees commissioned this Map and Plan to establish a Village sewer system as the first step toward mitigating nitrogen contamination attributed to the continued use of conventional onsite sanitary wastewater disposal systems within the Village. The sewer system, as identified herein, is comprehensive and focused on improving the local environmental conditions as well as promoting smart-growth where permitted in accordance with local zoning through four (4) phases of implementation. Implementation of each phase is based on the Village's ability to finance the build-out of sanitary infrastructure, which can be highly dependent on grant subsidy. The

[1] The Suffolk County Comprehensive Water Resources Management Plan, 2015, was prepared as a joint effort between Suffolk County Department of Health Services, Suffolk County Department of Public Works, Suffolk County Department of Economic Development and Planning, Suffolk County Water Authority and CDM-Smith to develop one document that identified the current impairments to all water resources within the County and recommend corrective actions that must be taken to prevent further degradation.

[2] Dr. Christopher J. Gobler, PhD. Quantifying Nitrogen Loading to from Village of Westhampton Beach to Surrounding Water Bodies and their Mitigation by Creating a Sewer District. June 2017. Prepared for the Village of Westhampton Beach, Village Board of Trustees.

phasing terminology utilized throughout this report is not intended to imply a sequential build-out plan, but rather identify areas that will be serviced by centralized collection and conveyance infrastructure (i.e. Phase 1, Phase 2 & Phase 3) versus areas that will be serviced by innovative advanced onsite treatment systems (i.e. Phase 4). Concurrent build-out of the phases is anticipated, specifically with regards to implementation of Phase 4. Ultimately, build-out of each phase will be highly dependent upon the affordability to move forward for property owners within the sewer system boundary.

As such, this Map and Plan defines the Village sewer system boundary and identifies the sanitary wastewater collection, conveyance and treatment requirements for the Phase 1 sewer service area. The Phase 1 sewer service area is intended to encompass the properties highlighted in Dr. Gobler's study that contribute the high-density nutrient load to groundwater, which correlates to the core commercial area. Operation and maintenance considerations, overall project cost and tax implications, legal requirements and an overview of the environmental review process are also identified. By providing sanitary infrastructure for the Phase 1 service area, the Village will reduce the overall nitrogen load to the contributing groundwater into the Moniebogue Bay watershed.

### 1.1 Purpose of Forming the Village of Westhampton Beach Sewer system

All properties located within the Village, except for a few select commercial properties that have advanced onsite treatment systems, discharge their wastewater to individual on-site sanitary disposal systems consisting of either leaching pools or a septic tank with leaching pools. To minimize the discharge of contaminants to the environment, Suffolk County Department of Health Services (SCDHS) enacted Article 4, Article 6, Article 7 and Article 12 of the Suffolk County Sanitary Code to form the rules and regulations on which to protect groundwater and public health in Suffolk County. Article 6 of Suffolk County Sanitary Code was enacted in 1980 to limit development density in Suffolk County based on location relative to water resources. Any development initiated after 1980 that would exceed the density limitations specified in Article 6 would be required to install onsite sanitary wastewater treatment system(s) or connect to an existing treatment system to ensure compliance with local regulatory requirements.

To improve upon the current regulations, SCDHS is in the process of amending the Suffolk County Sanitary Code with Article 19. A copy of the draft Article 19 is included as **Appendix B.**[3] This Article is intended to "*provide a cost-effective and environmentally sound alternative to sewers in portions of the County that are outside the designated sewer areas. The intent and purpose of this Article is to facilitate development and use of I/A OWTS in Suffolk County as a conservative measure and to authorize the Suffolk County Department of Health Services, as a Responsible Management Entity, to develop and use resources, standards, capabilities and systems to ensure that I/A OWTS are properly managed and maintained, and provide a level of treatment superior to Conventional Septic Systems*." In consideration of the pending Article 19, the Village sewer system plan identifies properties located outside of the designated sewer service area(s) for installation of Innovative and Alternative Onsite Wastewater Treatment Systems (I/A OWTS). Funding subsidy to residential property owners for the installation of I/A OWTS systems is currently made available through incentive programs administered by both the Town of Southampton and Suffolk County; the Village of Westhampton Beach Board of Trustees are also contemplating proposed legislation to promote the installation of I/A OWTS to reinforce their sewer system plans and promote the use of the previously mentioned incentive programs.

The existing make up within the Village is diverse, and consists of a mix of residential, commercial and recreational properties. The core commercial area of the Village is generally located along Main Street, between Sunset Avenue, Mill Road, Library Avenue, Mitchell Road and Stevens Lane, adjacent to Moniebogue Creek, north of Moniebogue Bay. Much of this area within the Village was developed prior to 1980 and is "non-conforming" to the density limitations specified in Article 6. In addition to this issue, many of the existing conventional onsite sanitary wastewater disposal systems within the core

[3] Suffolk County Sanitary Code – Article 19: Management of Innovative and Alternative Onsite Wastewater Treatment Systems. The pre-mentioned Article 19 is still in draft status and has not been adopted through legislature, but is anticipated to be made official by end of 2017, beginning of 2018.

commercial area as well as throughout the entire Village are not constructed in accordance with current standards and do not function properly. Shallow groundwater conditions impact the ability for existing systems to accommodate current sanitary loads and require routine pump outs to avoid potential wastewater back-ups and overflows to the ground. Sea level rise will exacerbate the situation. These conditions also negate the potential for in-situ nitrogen reduction from bacterial consumption and vegetative root uptake, resulting in high concentration nitrogen and other constituent loading direct to groundwater. In many cases, local regulatory agencies will not allow property owners to increase the capacity of their existing onsite systems since their existing build-out does not comply with current Suffolk County Sanitary Code.

Environmental contamination from continued use of existing conventional onsite sanitary wastewater disposal systems is of significant concern to the Village of Westhampton Beach because of its negative impact on groundwater, Moniebogue Bay and other surrounding surface waters. Excessive nutrient loading to the Moniebogue Bay watershed has resulted in recurring algal blooms that are attributed to the red, brown and rust tides, which have become commonplace during the warm weather months. To mitigate nutrient source loading from existing onsite disposal systems, the Village is looking to both promote installation of I/A OWTS in accordance with Article 19 and construct centralized sanitary collection, conveyance and treatment infrastructure in areas that cannot be accommodated by the Article 19 I/A OWTS.

Areas within the Village sewer system where centralized sanitary collection, conveyance and treatment infrastructure is installed will provide commercial property owners with the opportunity to moderately expand their existing businesses based on existing zoning, as well as result in improved public perception associated with the reduction of nuisance odor emissions that commonly occur during pump out events of existing onsite disposal systems. A revitalized commercial core and improved public perception within the Village of Westhampton Beach will most likely increase its desirability as a year-round destination for Village residents, Suffolk County residents with disposable incomes, and tourists. The potential expansion of businesses could provide additional employment opportunities and may result in increased property valuations. The increase in property valuation within the commercial core area will provide additional property tax revenues to the Village while the increased business activity will provide additional sales tax and income tax revenue, thus increasing the overall valuation of the Village of Westhampton Beach.

For these reasons, the Village has commissioned this Map and Plan to establish the framework on which to provide sanitary sewer service to properties within the Village's commercial core area. The expansion of the service and increased quantity of I/A OWTS installations will occur over time to eventually include the entire Village at a schedule to be determined by the Board of Trustees.

### 1.2 Current Regulatory Statutes

Article 6 of the Suffolk County Sanitary Code limits wastewater generation in un-sewered areas of Suffolk County based on a tax lot's location relative to eight (8) groundwater management zones (GMZ). Each GMZ was created to separate the Suffolk County watershed based on differences in hydrogeology and groundwater quality. The flow limitations for each GMZ are based on maintaining a maximum total nitrogen concentration in groundwater of 10 mg/L. The 10 mg/L limit is based on the current SCDHS maximum allowable concentration for nitrogen in groundwater.

The Village of Westhampton Beach is primarily located within GMZ V with the northernmost portion of the boundary within GMZ III. GMZ V is the zone that comprises the southwestern portion of the south fork of the County not included in GMZ IV, which has more agricultural activities. GMZ III encompasses the central part of the County, including much of the Central Pine Barrens, and is a significant deep flow recharge water supply. The sanitary flow limitation associated with GMZ V is 300 GPD/acre, which is equivalent to limiting zoning to a 40,000-square foot (1 acre) lot for each single-family residence. The sanitary flow limitation associated with GMZ V is 600 GPD/acre, or a 20,000-square foot lot (0.50 acres) for each single-family residence. Since most of the development within the Village of Westhampton

Beach occurred prior to existing Suffolk County Sanitary Code regulations, the existing build-out within the Village exceeds the current density limitations in many areas.

### 1.3 Sewer Service Area

The sewer system boundary encompasses the entire Village as shown in **Figure 1**. The Phase 1 sewer service area is comprised of a subset of properties located within the overall Village sewer system boundary. The Phase 1 sewer service area encompasses 156 Suffolk County tax lots consisting of approximately 31 acres. The tax lots located within the Phase 1 sewer service area are non-contiguous and presented in **Figure 2** along with the proposed future phasing. The properties within the Phase 1 service area are primarily comprised of commercial lots, with some residential and vacant parcels. The commercial properties consist mainly of restaurants, store fronts, and municipal buildings, consistent with a typical Long Island main street business area. The properties encompassed by the Phase 1 sewer service area have been confirmed by the Village and have been modified several times to accommodate the vision of the Village to keep the project affordable and improve the feasibility of moving forward, while still providing a reduction to the overall nutrient load to groundwater and the Moniebogue Bay watershed.

Flow generated within the Phase 1 service area will be collected and conveyed to an existing treatment facility located outside the boundary of the Village at the Gabreski Airport, which is owned and operated by Suffolk County Department of Public Works (SCDPW). This existing facility is located within Suffolk County Sewer District No. 24 – Gabreski Municipal (SCSD #24). A conceptual certification for connection of the Village of Westhampton Beach to SCSD #24 has been approved by the Suffolk County Sewer Agency via Resolution No. 43-2017. Refer to **Appendix C** for a copy of the resolution. The terms of this conceptual connection certification require the Village to expand the existing treatment facility capacity from 100,000 gallons per day (GPD) to 150,000 GPD. A preliminary engineering design for the required capacity expansion has been coordinated and approved by SCDPW on August 25, 2017. Refer to **Appendix D** for a copy of the approval correspondence.

## 2.0 SANITARY FLOW PROJECTIONS

### 2.1 Introduction

Sanitary wastewater flow must be identified to determine the appropriate size and type of infrastructure necessary to provide wastewater collection, conveyance and treatment. There are several different methods that can be used to estimate wastewater flow for a given area. As cited in an industry textbook - "Commercial wastewater flow rates are generally expressed in gal/acre/day and are based on existing water use records for developed properties or estimated flows for future development based on anticipated zoning. Comparative data from similar areas could also be used to estimate hydraulic loadings."[4] In areas that are already developed, where significant changes of use are not expected, existing water usage records can be used to project wastewater generation rates. In areas where development is expected to occur and/or where land use and build-out are known, density loading rates and design sewage flow rates stipulated by the local regulatory agency are typically used to project wastewater flows. Since existing build-out is known within the Phase 1 service area, and limited growth is expected, wastewater generation rates have been based on historical Suffolk County Water Authority (SCWA) usage records from 2014 and 2015.

### 2.2 Sanitary Flow Analysis

As previously stated in Section 1.3, the proposed service area boundary is comprised of one hundred fifty-six (156) Suffolk County tax lots; eighty-eight (88) are zoned for residential use, and sixty-eight (68) are zoned for commercial or other uses. The commercial properties vary from low-flow dry uses, such as office space, retail and community services, to high-flow wet uses, such as restaurants. There are two (2)

[4] Metcalf & Eddy, third edition, Wastewater Engineering, pg. 26

tax lots within the service area that are not projected to generate sanitary flow. These lots consist of paved parking lots located behind the building frontages along Main Street.

The average daily water consumption rates were assessed based on summer season and winter season months for the Phase 1 service area. The average daily summer usage was found to be approximately 60,000 gallons per day (GPD), and the average daily winter usage was found to be approximately 18,000 GPD. This type of data, if collected from a year-round residential development, would attribute the increased summer flow to irrigation and result in the winter data being selected to project sanitary flow. Since the Phase 1 service area is comprised of a variety of uses, this type of correlation cannot be made. Due to the existing variable build out of the Phase 1 service area, it can be inferred that the higher summer usage is attributed to a combination of irrigation, supplemental swimming pool make-up water, and increased business at local restaurants. It is also inferred that the lower winter usage is attributed to no irrigation, swimming pool closures, and relocation of seasonal residents to warm climate destinations during cold weather months. For these reasons, the summer usage has been selected as the conservative basis of design flow for the Phase 1 service area with the understanding that there will be capacity available for potential future build-out, new development and/or expansion of the Phase 1 service area infrastructure based on current zoning.

Refer to **Table 1** for the derivation of the anticipated sanitary flow projections for the proposed service area.

**Table 1 - Sanitary Flow Derivation based on SCWA Usage Records**

| NYS Land Use Classification | ADF (GPD) |
|---|---|
| 200 – Residential | 33,400 |
| 300 – Vacant Land | 400 |
| 400 – Commercial | 24,400 |
| 600 – Community Services | 1,760 |
| Total: | 59,960 |
| SAY: | 60,000 |
| **Average Daily Design Flow** | **60,000** |

The sanitary flow density for the commercial core area is 1,916 GPD/acre (i.e. 59,960 GPD ÷ 31.29 acres). This existing flow density exceeds Suffolk County Sanitary Code limitations for Groundwater Management Zone III and V by 1,216 GPD/acre and 1,616 GPD/acre, respectively. To comply with current sanitary code, the Village would need to either reduce density in the commercial core area or provide sanitary wastewater treatment infrastructure. Since the Village desires to improve water quality and allow for potential growth based on existing zoning within the commercial core area, a reduction of density is not feasible, and the Village's only option is to provide sanitary collection, conveyance and treatment facilities.

## 3.0 TECHNICAL INFORMATION

### 3.1 Collection System Options

Sanitary wastewater collection systems are used to collect wastewater generated from individual properties and provide conveyance to either an intermediate pump station or directly to a centralized wastewater treatment facility. The layout and design of collection systems in Suffolk County are done in accordance with Ten States Standards, and the regulatory requirements of SCDPW and SCDHS.

Several different collection system options were evaluated to identify the appropriate alternative for the Village of Westhampton Beach. The main drivers for the type of system to be used are local topography and cost. Construction costs and operation and maintenance requirements are also considerations that need to be evaluated. The minimization of construction disturbance is also of concern to the Village. The collection system must be designed to handle both the average daily flow and peak hourly flow that will be generated by properties within the proposed sewer system.

The three different types of collection systems considered for the Village of Westhampton Beach are:

- **Option 1: Gravity Sewers**
- **Option 2: Vacuum Sewers**
- **Option 3: Low Pressure Sewers**

Each of these collection system options has a range of applicability as discussed below.

### 3.1.1 Option 1: Gravity Sewers

Gravity sewers are designed to use gravity to convey sanitary wastewater from its source to a treatment facility. Gravity sewers are typically configured with one main sewer line running the length of a street with branch laterals connecting each abutting property to the main line. Gravity sewers are appropriate for areas where the sewer pipe installation can follow the natural inclines of the terrain so that wastewater can flow to a treatment facility or intermediate pump station strategically located at a low point in the landscape. The gravity sewer main is situated such that wastewater flow follows the pitch of the pipe all the way to the treatment facility and/or intermediate pump station; the major advantage of this collection system option is its autonomous operation – once in place, the system does not require pumping or other energy inputs to operate. The slope of the gravity sewer must be steep enough to maintain a “self-cleansing velocity” to prevent clogging and decay of untreated wastewater within the sewer pipe. Periodic cleaning and pipe inspections are the only routine maintenance activities necessary.

Gravity sewers can also be installed in areas with varying terrain. This is accomplished by locating pump stations at intermediate low points to convey the collected wastewater to another gravity-flow segment of the collection system or directly to a treatment facility via submersible pump station and force main. These pump stations are powered by electricity and therefore provisions must be made so that continuous operation can be maintained during periods of power outage.

Installing gravity sewers in areas with varying terrain increases the capital and operational costs of the system, both due to the deep excavations that are required as well as the cost of constructing and operating intermediate pump stations. Another major disadvantage of gravity sewers is the need to open-cut the entire length of roads where the pipe installation is to occur which can result in increased excavation, dewatering and site restoration costs. Additionally, gravity sewers do not have any integrated flow control built-in to the drainage piping, which results in the piping to be oversized to accommodate the peak flow contributions associated with the diurnal water-use cycle. This characteristic of gravity sewers also impacts the size of the intermediate pump stations to ensure peak flow conditions are met.

### 3.1.2 Option 2: Vacuum Sewers

Vacuum sewers are a second option for the Village of Westhampton Beach to collect sanitary wastewater. As of present date, no vacuum sewers are currently used in Suffolk County. Vacuum sewers rely on a pressure differential to convey wastewater from individual properties to the collection station. This pressure differential is created by vacuum pumps located at a centralized pump station. The vacuum pumps are connected to an enclosed wet-well (collection tank), which is directly connected to the collection system piping, thereby inducing the negative pressure necessary to convey wastewater flow from all properties. Vacuum sewers have been successfully implemented in other parts of the

country and the world; they can be cost effective in areas with a high-water table or where the terrain is relatively flat.

The wastewater generated from each property within the collection system flows by gravity into an individual onsite storage tank. Once a certain fill level is reached within each individual storage tank, a pneumatic valve opens and the vacuum suction induced within the collection system empties the tank and conveys the wastewater through the collection system piping to the enclosed wet well (collection tank). Wastewater collected in the enclosed wet well is then conveyed to a treatment facility via dry-pit sewage pump(s) and force main(s).

Because vacuum sewers do not rely on gravity, they can be installed at shallow depths and do not need to follow the natural grade of the terrain. Directional drilling can be used to install vacuum sewers, which is advantageous in developed areas because of the reduced road excavation and restoration efforts.

Vacuum sewer collection systems require the installation of at least one 'vacuum station' to sustain the required negative pressure on the sewer line. More than one station may be required depending on size and topography of the collection area. These vacuum stations are powered by electricity and therefore provisions must be made so that continuous operation can be maintained during periods of power outage.

Since wastewater is temporarily stored at the site where it is generated, the peak flows typical of gravity collection systems are not prevalent in a vacuum sewer system. Peak flows associated with diurnal water use tend to be dampened through flow equalization that occurs within each property's storage tank.

Vacuum sewer systems typically incur relatively high capital costs and high operation and maintenance costs. The high capital costs are associated with the vacuum pumps, associated piping and system controls as well as the need for an enclosed wet-well (collection tank). The high operation and maintenance costs are attributed to the vacuum equipment necessary to operate the collection system as well as the issues associated with grease build-up inside of the individual onsite storage tanks. Grease build-up is a common issue with wastewater generated by food service users in high-density commercial areas; grease can impede the proper operation of the pneumatic valves causing potential vacuum leaks. These vacuum leaks can directly result in failure of the collection system to convey wastewater to the central vacuum station.

#### 3.1.3 Option 3: Low Pressure Sewers

Low pressure sewer systems are another collection system option that is applicable in relatively flat areas or where the groundwater table is high. The Village of Patchogue is served by low pressure sewer systems in areas where both the groundwater table is shallow and topography does not lend itself to the use of gravity sewers. Low pressure sewer collection systems require each property within the collection area to operate and maintain an on-site grinder pump station. All grinder pump stations are connected to a pressurized sewer main, which conveys wastewater generated within the collection area to either a treatment facility directly, a gravity sewer or to an intermediate centralized pump station.

The wastewater generated from each property flows by gravity into an onsite storage tank. The onsite storage tank is fitted with level sensing equipment and a submersible grinder pump. The grinder pumps are typically positive displacement type to achieve near constant flows at a wide range of head conditions that are prevalent in low pressure sewer collection systems. Some applications allow the use of submersible centrifugal pumps.

The grinder pumps are turned on when a pre-set fill level is sensed in the storage tank, and turned off after the storage tank is drained to a low-level condition. The pump cycles are controlled by the capacity of the onsite wet well, the real-time pressure within the common sewer main and the daily wastewater generation rate of the property.

The sewer mains used in a low-pressure collection system are sized based on flow and head requirements and to maintain a "self-cleansing velocity." Typical low-pressure sewer main sizes range from 2-inch diameter to 4-inch diameter piping. Pipe materials used in these applications are typically fabricated from high density polyethylene (HDPE) resin; polyvinylchloride (PVC) pipe material is also used. Like vacuum sewers, low pressure sewers can be installed at shallow depths and do not need to follow the natural grade of the terrain.

Directional drilling can be used to install low pressure sewers, which is advantageous in developed areas and locations with shallow depths to groundwater to minimize road excavation, restoration, and dewatering. Like vacuum sewers, peak flow conditions typical of gravity collection systems are not prevalent in a low-pressure sewer network. Flow equalization of the diurnal water use pattern occurs within the low-pressure grinder station on each property; the maximum flow from a low-pressure sewer system is a function of head loss within the system, which limits the number of pumps that can simultaneously operate.

Typical low-pressure sewer collection systems require the installation of at least one centralized pump station. More than one station may be required depending on size and topography of the collection area. The function of this pump station is like that used in a gravity collection system. However, some low-pressure collection systems can be piped directly to a treatment facility without the need for an intermediate pump station if the system head and flow conditions remain within the operating range of the onsite grinder stations.

Low pressure sewer systems typically become less and less cost effective in sewer districts that convey large volumes of flow. These situations result in the need to install numerous parallel low-pressure sewer mains to meet the head and scouring requirements of the system; intermediate pump stations also become required in these instances. Low pressure sewers, like vacuum sewers, are typically used in hybrid configurations with gravity sewers when the service areas become large scale, requiring numerous intermediate pump stations.

### 3.1.4 Selected Collection System Option

Topographical information and groundwater data obtained from the United States Geological Survey (USGS) was used to evaluate the physical characteristics of the service area to recommend a collection system option. USGS topography maps show grade within the proposed service area to generally slope from north to south and inwards from the west and east towards Moniebogue Creek. Depth-to-groundwater information obtained from the USGS indicates that groundwater levels range from less than 11 feet below grade for the area generally located along Main Street between Sunset Avenue, Mill Road, Mitchell Road and all properties within the Phase 1 service area south of Main Street. Some of the remaining properties located along the west side of Sunset Avenue and Mill Road have typical groundwater depths between 11-20 feet below grade.

Based on a preliminary evaluation of the USGS datasets in conjunction with the average daily design flow (i.e. 60,000 gallons per day ≈ 42 gallons per minute), relatively small service area and SCDPW preference; the selection of a gravity sewer system with two low-pressure sewer extensions routed south along Library Avenue and Mitchell Road to service the high density residential parcels and two central pump stations is the recommended option for wastewater collection in the Village of Westhampton Beach. (Since SCDPW will be taking over the operation and maintenance of the proposed sewer systems, the Village determined that gravity sewers should be used to the maximum extent possible.) Vacuum sewers were eliminated from consideration due to the relatively high operation and maintenance costs associated with these systems, as well as lack of local operator experience. A purely gravity sewer system was rejected, because of the relatively flat terrain in the proposed service area coupled with relatively shallow groundwater conditions that would be encountered to connect the high density residential properties within the southern part of the service area. The proposed collection system will be designed in accordance with Ten States Standards.

### 3.1.5 Preliminary Collection System Design

Two separate gravity sewer drainage zones will be required to collect the full flow from the Phase 1 service area. One of the drainage zones will provide service to properties located along the north side of Main Street and the other drainage zone will provide service to properties located along the south side of Main Street. Each drainage zone will discharge to its own centrally located pump station. The pump station accepting flow from the properties discharging to the drainage zone on the south side of Main Street will convey flow either to the pump station located on the north side of Main Street or directly to SCSD #24. Similarly, the pump station accepting flow from the properties discharging to the sewers on the north side of Main Street will convey flow directly to SCSD #24.

This plan considers ownership of all sewers, pump stations, force mains and associated utility easements will be transferred to SCDPW after they are constructed by the Village. Transferal of sewer infrastructure ownership from the Village to SCDPW was determined to be cost effective when considering future operation and maintenance expenses that the Village would have to consider. Since the sewer system would be new to the Village, the Village would have to create a new department that would require full time administrators, maintenance personnel as well as vehicles and expensive sewer cleaning equipment.

The gravity sewer network will consist of approximately 2,000 linear feet of 8-inch diameter PVC DR-18 pipe and 1,400 linear feet of 10-inch diameter PVC DR-18 pipe with 66 pre-cast concrete sanitary manholes. The main gravity sewer interceptors will run east-west along the rear of the properties that front Main Street. The locations of these gravity sewer mains were selected to coordinate with an ongoing Main Street Improvement project, avoid additional disturbance to the storefronts along Main Street and minimize interior plumbing modifications to properties along the route by intercepting their existing sanitary wastewater drains. Each property serviced by a gravity sewer will be connected to the sewer main by a 6” diameter PVC building connection.

The low-pressure sewer extensions will consist of approximately 1,900 linear feet of 3-inch diameter DR-11 HDPE piping. Pipes were sized at the largest diameter to provide sufficient capacity for the design flow while maintaining the necessary minimum scouring velocity of 2.0 feet/second as required by governing regulations. The low-pressure pump stations will be installed on each private property connected to the low-pressure sewer extension.

The two (2) centrally located pump stations will be constructed in accordance with SCDPW standards and include a wet well, separate valve pit, control building and standby emergency power generator. Refer to **Figure 3** for the Phase 1 service area infrastructure layout and design flow summary.

The sanitary infrastructure will be installed within rights-of-way and municipally-owned properties to the greatest extent possible. Areas where infrastructure cannot be installed within a right-of-way and municipally-owned properties will require temporary construction and permanent maintenance easements. The final locations of all sewer mains, service laterals, manholes, and pump stations will be determined during the engineering design phase of this project so that they can be coordinated with existing utility locations and site conditions to avoid potential conflicts. Easements will be outlined in the Engineering Design Report.

## 3.2 Wastewater Treatment Alternatives

A preliminary evaluation of properties within and around the Village determined three potential alternatives for wastewater treatment. The first option considered siting a new facility at the existing Village DPW maintenance yard located outside the Village boundary close to SCSD #24. The second option considered siting a new facility at the former Village DPW maintenance yard located on the north side of South Country Road in Quiogue. And the third option considered connecting to the existing treatment facility serving SCSD #24. Following a detailed evaluation of each alternative, the Village determined that a connection to the existing treatment facility at SCSD #24 was the cost-effective

solution. Detailed coordination with SCDPW identified that the Village would have to pay for the expansion of the facility, and contribute towards future operation and maintenance costs based on their proportioned flow contribution. The County also confirmed that the County-required one-time connection charge, based on $30 per gpd, would be applied to the costs associated with the facility expansion.

#### 3.2.1 Preliminary Wastewater Treatment Expansion Design

The proposed facility expansion design was coordinated with SCDPW to ensure the plan conformed to their requirements. The existing facility utilizes a sequencing batch reactor (SBR) treatment process with preliminary flow equalization to treat 100,000 GPD. As previously stated in Section 1.3, the accepted facility expansion design will replace the existing SBR process equipment with new SBR equipment sized to treat 150,000 GPD. A copy of the preliminary process design that was approved by SCDPW has been included as **Appendix E**. The final details of the design, including selection of treatment process equipment and detailed design layouts will be confirmed during the engineering design phase of this project so that they can be coordinated with SCDPW and finalized in an Engineering Design Report.

## 4.0 LEGAL CONSIDERATIONS AND MAP & PLAN

### 4.1 Formation Requirements

The Village must follow the legal procedures outlined by New York State (NYS) Village Law to establish the Village of Westhampton Beach sewer system. The formation of this entity is contingent upon the Village Board accepting this Map and Plan according to Article 14, Section 14-1400 of NYS Law. This section of NYS Law requires the Village Board to determine by resolution that all property and property owners within the service area are benefitted; the establishment of the sewer system is in the best interest of the public; and to identify the apportionment of costs of facilities. This Map and Plan must also be approved by the state commissioner of health.

**Table 2** provides a listing of the Village of Westhampton Beach Parcel IDs for properties proposed to be within the Phase 1 sewer service area. These properties are required to be reported to the New York State Comptroller's office. The State may require a metes and bounds description of the sewer system boundary.

**Table 2 - SCTM Properties within the Proposed Phase 1 Service Area**

| Parcel Count | Parcel ID |
|---|---|
| 1 | 11.-1-11.0 |
| 2 | 11.-1-1-1.0 |
| 3 | 11.-1-1-2.0 |
| 4 | 11.-1-1-3.0 |
| 5 | 11.-1-1-4.0 |
| 6 | 11.-1-1-5.0 |
| 7 | 11.-1-1-6.0 |
| 8 | 11.-1-1-7.0 |
| 9 | 11.-1-1-8.0 |
| 10 | 11.-1-2-1.0 |
| 11 | 11.-3-32.0 |
| 12 | 11.-1-2-3.0 |
| 13 | 11.-1-2-4.0 |
| 14 | 11.-2-10.0 |
| 15 | 11.-2-11.0 |
| 16 | 11.-2-1-1.0 |

| Parcel Count | Parcel ID |
|---|---|
| 17 | 11.-2-1-2.0 |
| 18 | 11.-2-1-3.0 |
| 19 | 11.-2-12.1 |
| 20 | 11.-2-1-3.0 |
| 21 | 11.-2-20.1 |
| 22 | 11.-2-20.3 |
| 23 | 11.-2-20.4 |
| 24 | 11.-2-21.0 |
| 25 | 11.-2-22.0 |
| 26 | 11.-2-2-2.0 |
| 27 | 11.-2-24.0 |
| 28 | 11.-2-25.0 |
| 29 | 11.-2-26.0 |
| 30 | 11.-2-27.0 |
| 31 | 11.-2-28.0 |
| 32 | 11.-2-31.0 |
| 33 | 11.2-42.0 |
| 34 | 11.-2-43.1 |
| 35 | 11.-2-9.0 |
| 36 | 11.-3-1.0 |
| 37 | 11.-4-51.0 |
| 38 | 11.-3-1-10.0 |
| 39 | 11.-3-1-11.0 |
| 40 | 11.-3-1-12.0 |
| 41 | 11.-3-1-13.0 |
| 42 | 11.-3-1-14.0 |
| 43 | 11.-3-1-15.0 |
| 44 | 11.-3-1-16.0 |
| 45 | 11.-3-1-17.0 |
| 46 | 11.-3-1-18.0 |
| 47 | 11.-3-1-19.0 |
| 48 | 11.-3-1-2.0 |
| 49 | 11.-3-1-20.0 |
| 50 | 11.-3-1-21.0 |
| 51 | 11.-3-1-22.0 |
| 52 | 11.-3-1-23.0 |
| 53 | 11.-3-1-24.0 |
| 54 | 11.-3-1-25.0 |
| 55 | 11.-3-1-26.0 |
| 56 | 11.-3-1-27.0 |
| 57 | 11.-3-1-28.0 |
| 58 | 11.-3-1-29.0 |
| 59 | 11.-3-1-3.0 |
| 60 | 11.-3-1-30.0 |

| Parcel Count | Parcel ID |
|---|---|
| 61 | 11.-3-1-31.0 |
| 62 | 11.-3-1-32.0 |
| 63 | 11.-3-1-33.0 |
| 64 | 11.-3-1-34.0 |
| 65 | 11.-3-1-35.0 |
| 66 | 11.-3-1-36.0 |
| 67 | 11.-3-1-37.0 |
| 68 | 11.-3-1-38.0 |
| 69 | 11.-3-1-39.0 |
| 70 | 11.-3-1-4.0 |
| 71 | 11.-3-1-40.0 |
| 72 | 11.-3-1-41.0 |
| 73 | 11.-3-1-42.0 |
| 74 | 11.-3-1-43.0 |
| 75 | 11.-3-1-44.0 |
| 76 | 11.-3-1-45.0 |
| 77 | 11.-3-1-46.0 |
| 78 | 11.-3-1-47.0 |
| 79 | 11.-3-1-48.0 |
| 80 | 11.-3-1-49.0 |
| 81 | 11.-3-1-5.0 |
| 82 | 11.-3-1-50.0 |
| 83 | 11.-3-1-6.0 |
| 84 | 11.-3-1-7.0 |
| 85 | 11.-3-1-8.0 |
| 86 | 11.-3-1-9.0 |
| 87 | 11.-3-3.1 |
| 88 | 11.-3-4.0 |
| 89 | 11.-3-6.0 |
| 90 | 12.-1-1-1.0 |
| 91 | 12.-1-1-2.1 |
| 92 | 12.-1-1-2.2 |
| 93 | 12.-1-1-3.0 |
| 94 | 12.-1-1-4.0 |
| 95 | 12.-1-1-5.0 |
| 96 | 12.-1-1-6.0 |
| 97 | 12.-1-1-7.0 |
| 98 | 12.-1-1-9.0 |
| 99 | 12.-1-2-1.0 |
| 100 | 12.-1-2-10.0 |
| 101 | 12.-1-2-11.0 |
| 102 | 12.-1-2-12.0 |
| 103 | 12.-1-2-13.0 |
| 104 | 12.-1-2-2.0 |

| Parcel Count | Parcel ID |
|---|---|
| 105 | 12.-1-2-5.0 |
| 106 | 12.-1-2-6.0 |
| 107 | 12.-1-2-7.0 |
| 108 | 12.-1-2-8.0 |
| 109 | 12.-1-2-9.0 |
| 110 | 12.-2-1-1.0 |
| 111 | 12.-2-1-2.0 |
| 112 | 12.-2-1-3.0 |
| 113 | 12.-2-1-4.0 |
| 114 | 12.-2-1-5.0 |
| 115 | 12.-2-1-6.0 |
| 116 | 12.-2-1-7.0 |
| 117 | 12.-2-2-1.0 |
| 118 | 12.-3-1-1.0 |
| 119 | 12.-3-11.1 |
| 120 | 12.-3-12.0 |
| 121 | 12.-3-1-2.0 |
| 122 | 12.-3-1-3.0 |
| 123 | 12.-3-14.0 |
| 124 | 12.-3-1-4.0 |
| 125 | 12.-3-1-5.0 |
| 126 | 12.-3-2-1.0 |
| 127 | 12.-3-2-2.0 |
| 128 | 12.-3-2-3.0 |
| 129 | 12.-3-2-4.0 |
| 130 | 12.-3-2-5.0 |
| 131 | 12.-3-3-1.0 |
| 132 | 12.-3-3-2.0 |
| 133 | 12.-4-1-1.0 |
| 134 | 12.-4-12.0 |
| 135 | 12.-4-1-3.0 |
| 136 | 12.-4-1-9.0 |
| 137 | 12.-4-2-2.0 |
| 138 | 12.-4-2-3.0 |
| 139 | 12.-4-2-4.0 |
| 140 | 12.-4-2-5.0 |
| 141 | 12.-4-26.0 |
| 142 | 12.-4-2-6.0 |
| 143 | 12.-4-28.0 |
| 144 | 12.-4-30.0 |
| 145 | 12.-4-31.2 |
| 146 | 12.-4-32.0 |
| 147 | 12.-4-33.0 |
| 148 | 12.-4-35.2 |

| Parcel Count | Parcel ID |
|---|---|
| 149 | 12.-4-35.3 |
| 150 | 12.-4-36.1 |
| 151 | 12.-4-37.0 |
| 152 | 12.-4-39.0 |
| 153 | 12.-4-40.0 |
| 154 | 12.-4-41.1 |
| 155 | 12.-4-42.1 |
| 156 | 12.-4-53.1 |

### 4.2 Regulatory Requirements

The following bulleted items identify the regulatory requirements that must be considered during the creation of a Village sewer system.

- State Environmental Quality Review Act (SEQRA) compliance
- State Historic Preservation Office (SHPO) Compliance
- State Pollutant Discharge Elimination System (SPDES) Permitting
- Other project-related permitting

### 4.3 SEQRA & SHPO Compliance

SEQRA is required by the NYSDEC to consider environmental factors early in the planning stages for projects undertaken by local, regional and state agencies. The SEQRA process is intended to identify potential impacts to the environment that would result from proceeding with the project as planned. The Village has initiated the SEQRA process. An expanded environmental assessment has been completed and the Village has started the proceedings to declare themselves lead agency and conduct coordinated review to issue a determination of significance for the project to ensure full compliance with SEQRA. Refer to **Appendix F** for a copy of the expanded environmental assessment.

Submission of the plan to the State Historic Preservation Office (SHPO) is a significant part of the initial SEQRA process to identify areas where sites of historical significance could potentially be affected by the implementation of the proposed plan. Similar to SEQRA, the Village has already submitted information to SHPO and received a final determination stating, “no adverse impact.” Refer to **Appendix G** for a copy of the SHPO letter.

Should the SEQRA review result in a negative determination, the project plan and associated environmental review process will need to be re-evaluated and additional environmental impact studies and reporting may be required.

### 4.4 SPDES Permitting

A State Pollutant Discharge Elimination System (SPDES) permit is required to regulate all point source storm water and wastewater discharges to both groundwater and surface waters under New York State law. The existing SPDES permit for the treatment facility at SCSD #24 will need to be modified to account for the increased flow and must be filed with the New York State Department of Environmental Conservation as part of the Engineering Design Report for the facility expansion.

### 4.5 Other Project-Related Permits

Based on the locations where the proposed sanitary infrastructure will be constructed, it is anticipated that road opening permits may be required from Suffolk County Department of Public Works Division of Highways, Town of Southampton, Village of Westhampton Beach as well as the Metropolitan Transit Authority Long Island Rail Road (LIRR). Permitting from the New York State Department of Environmental Conservation (NYSDEC) may also be necessary in areas where infrastructure may encroach on classified wet lands and or require significant dewatering. Storm Water Pollution Prevention Plans (SWPPP) will also be required.

Additional permitting requirements may become necessary following the SEQRA compliance portion of this project.

## 5.0 ANTICIPATED PROJECT SCHEDULE

A preliminary and aggressive schedule for implementation of the project is provided in **Table 3**.

**Table 3 – Preliminary & Aggressive Project Schedule**

| Phase | Milestone | 2017 | | | | 2018 | | | | 2019 | | | | 2020 | | | | 2021 | | | | 2022 | | | |
|---|---|---|---|---|---|---|---|---|---|---|---|---|---|---|---|---|---|---|---|---|---|---|---|---|---|
| Planning & Approvals | Map & Plan Finalized | | | ■ | | | | | | | | | | | | | | | | | | | | | |
| | SEQRA and SHPO completed (Assumes EIS not required) | | | ■ | | | | | | | | | | | | | | | | | | | | | |
| | Public Hearings/Referendum to Establish the Sewer District (May Be Required) | | | ■ | | | | | | | | | | | | | | | | | | | | | |
| | Engineering Design Report Preparation (Includes State Approval) * | | | | ■ | ■ | ■ | | | | | | | | | | | | | | | | | | |
| | New York State Comptroller Approval Process (Sewer District Formed) | | | | ■ | ■ | ■ | | | | | | | | | | | | | | | | | | |
| Phase 1 | Project Funding, Grants and Loan Process (Phase 1) | | | | | | ■ | ■ | ■ | ■ | ■ | ■ | ■ | | | | | | | | | | | | |
| | Plans & Specifications Prepared for Construction (Phase 1) | | | | | | | | | ■ | ■ | ■ | ■ | ■ | ■ | | | | | | | | | | |
| | Suffolk County & NYSDEC Review of Construction Documents (Phase 1) | | | | | | | | | | | | | ■ | ■ | | | | | | | | | | |
| | Project Advertisement, Bidding, Award & Contract Execution (Phase 1) | | | | | | | | | | | | | | | ■ | ■ | | | | | | | | |
| | Construction (Phase 1) | | | | | | | | | | | | | | | | ■ | ■ | ■ | ■ | ■ | ■ | ■ | ■ | |
| | Start-up & Training (Phase 1) | | | | | | | | | | | | | | | | | | | | | | | ■ | ■ |

* Assumes design engineer retained without RFP

The schedule represents an aggressive timeline and assumes the Village can finalize their financing plans by the time the project is advertised for bids. Additional assumptions have also been integrated into this schedule such as the time allocated for review and approvals by state agencies, as well as stoppage of construction during the peak summer season. Should these assumptions prove accurate and the Village acts to keep the project moving forward, then it is expected that the system will be on-line in the fourth quarter of 2022.

# 6.0 TOTAL PROJECT COST OPINION

## 6.1 Introduction- Capital Construction and Soft Costs

Capital costs associated with the project are shown in **Table 4**. The cost opinion is based on the preliminary conceptual plan for the sewer system presented in Section 3 of this report and includes the following:

- Construction and Engineering costs for the proposed Phase 1 sanitary infrastructure;
- Planning costs primarily including utility mark-out, survey, soil borings, bond attorney, permitting and funding assistance;
- Engineering during construction, construction inspection, O & M Manual for the new facilities, finance charges.

The cost opinion presented in this document is based on assumptions relating to the final scope of design, unknown subsurface conditions, and unknown subsurface utility locations. Unknown locations of existing subsurface utilities and groundwater can significantly impact overall project cost and anticipated schedule. Also, market conditions as they pertain to inflation, public bidding environment, and delays in the project related to project funding is another potential concern when projecting project costs.

The cost opinion includes the construction and soft costs for the construction of a collection and conveyance system, as well as the expansion of an existing SCDPW treatment facility at SCSD #24. Estimated costs for restoration do not account for any special restoration that may be required by the governing municipality and assume only areas disturbed by work are restored. Trench restoration is assumed, not curb-to-curb paving.

The soft costs include survey, soil borings, legal and bond counsel, applications for grants, the O&M manual and Sewer Use Code, the purchase of utility trucks, a trailer-mounted emergency back-up generator, and spare parts/maintenance equipment and tools. The costs associated with the abandonment of on-site septic tanks, installation of onsite low-pressure sewer pump stations and sewer hook-up are not included in the scope of Contract S –Sewer System Construction. The total cost opinion for the sewer district does not include remediation of contaminated soils encountered during work within private utility easements. The costs associated with the previously stated items not included in the total project cost opinion would be borne by each property where this work would be required as an additional upfront cost determined prior to the start of construction.

**Table 4** summarizes the project cost opinion based on providing sanitary infrastructure to the properties within the initial service area. These costs do not reflect installation of collection, conveyance and treatment facilities to accommodate flow from the entire Village of Westhampton Beach. The cost opinion assumes four (4) prime construction contracts; three (3) for the treatment plant and a one (1) for the collection and conveyance system.

The line item costs presented in **Table 4** depict present-day value and escalation to second half of construction in 2022, based on the aggressive project schedule presented in **Table 3**. The escalation factor is calculated based on the 10-year compounded interest rate referenced from the 20 Cities Construction Cost Index (CCI) that is published by Engineering News-Record (ENR). The average annual compounded rate at which the CCI increased over the last 10 years is 3.35%.

**Table 4 - Total Project Cost (Present Day – 2017 & Escalation – 2022)**

| Item | Cost $ (2017) | Cost $ (2022) *(Rounded to $10,000)* |
|---|---|---|
| Contract S - Sewer System Construction (Sewers, Pump Stations, Force Mains) | $8,663,000 | $10,300,000 |
| Contract G – General Construction (Treatment Facility) | $1,425,000 | $1,700,000 |
| Contract P – Plumbing Construction (Treatment Facility) | $215,000 | $260,000 |
| Contract E – Electrical Construction (Treatment Facility) | $547,000 | $650,000 |
| **Total Estimated Construction Cost:** | **$10,850,000** | **$12,910,000** |
| Total Engineering Fee for Design and Construction Administration (ASCE Curve) | | $950,000 |
| Total Construction Inspection Fee | | $740,000 |
| Total Soft Costs[5] | | $620,000 |
| **Total Estimated Project Cost:** | | **$15,220,000** |
| **10% Project Contingency (SAY:** | | **$1,530,000** |
| **Total Estimated Project Cost (SAY):** | | **$16,750,000** |

### 6.2 Estimated Operation and Maintenance Costs (Sewer Rent)

SCDPW has verified that they would assume operation and maintenance responsibilities for the Village sanitary infrastructure. Terms of the annual operation and maintenance (O&M) requirements for the Village sewer system will be identified in a legal agreement that must be finalized between SCDPW the Village. The County has indicated that the current total annual operation and maintenance budget for SCSD #24 is not expected to increase following the Village sewer connection, and that the Village would be required to contribute to the cost of operation and maintenance (sewer rent) proportionally based on their single-family-equivalent (SFE) flow contribution to SCSD #24. SCDPW bases their sewer rent for operation and maintenance on SFE flow units equal to 225 GPD.

The Phase 1 service area is comprised of 267 SFE (i.e. 60,000 GPD ÷ 225 GPD/SFE). The current annual operation and maintenance budget for SCSD #24 is $200,000. Therefore, the Village will be responsible to pay 40% of the annual operation and maintenance budget equal to a total annual cost of $80,000 per year (i.e. 40% x $200,000). Distributing this total annual cost to the Phase 1 service area will result in an operation and maintenance rate equal to **$300/year/SFE** (i.e. $80,000/year ÷ 267 SFE).

## 7.0 FINANCIAL IMPACT TO INC. VILLAGE OF WESTHAMPTON BEACH

### 7.1 Total Project Cost Debt Service

Article 14, Section 22-2200 of NYS Law gives the Village Board the authority to apportion the annual capital debt service incurred by the sewer district (service area) across all properties within the Village (sewer system) regardless of whether they are located within the benefitted service area. In accordance with NYS Law, the Village has decided to distribute the capital cost for the sewer system across all properties within the Village by requiring properties within the Phase 1 service area to pay 70% of the annual debt service and properties located outside of the Phase 1 service area to pay the remaining 30% of the annual debt service. This decision was made on the premise that groundwater contamination and

[5] Includes costs for topographic and subsurface utility survey, Soil Borings, Existing Pavement Cores & Piezometers, Operations & Maintenance Manuals, Land & Easement Acquisition and Legal & Bond Counsel.

poor water quality within Moniebogue Bay and surrounding surface waters are a Village-wide problem that all properties are responsible to protect, and will begin to realize the improvement following the initial sewering of the commercial core area.

Since properties located inside of the service area will have the added benefit of connecting to the sanitary infrastructure, the Village has decided to distribute the debt service differently to properties located inside of the service area relative to properties located outside of the service area. The exact distribution was determined by the Village. 70% of the debt service will be paid by properties inside of the service area and 30% of the debt service will be paid by properties located outside of the service area.

### 7.2 Apportionment of Costs for Village of Westhampton Beach Sewer System

Section 14-1416 of NYS Law requires the Map and Plan to identify the actual apportionment of debt service for a sewer system. The Map and Plan must identify the area of local assessment and the apportionment based on the benefit received by each property within the benefitted service area. The recommended apportionment method for the costs of the sewer system is based on "ad valorem." Ad valorem based debt service distributes the project costs across the assessed value of benefitted properties using the assessed property values as the proportion across which the debt will be serviced.

The multiplier used to determine the annual debt service is referred to as the capital recovery factor (CRF). The CRF is calculated using the following formula:

$$CRF = \frac{i(1+i)^n}{(1+i)^n-1}$$

- $i$ = interest rate
- $n$ = payback period

The CRF is dependent upon the interest rate and payback period associated with the bond used to fund the capital cost of the district.

Funding for this project is based on a Village bond to determine the anticipated annual debt service for the Village of Westhampton Beach sewer system. The presumed bond is based on a 2.5% interest rate over a 30-year term. The CRF associated with a loan comprised of a 2.5% interest rate over a 30-year term is equal to 0.0478.

The total annual debt service is determined by multiplying the bond amount by the CRF. This is termed the amortized cost. The bond amount is based on the 2022 project costs summarized in **Table 4**. The assessment rate for the district is calculated by dividing the annual debt service by the total assessed value of taxable properties within the benefitted area (e.g. 70% to inside the service area versus 30% to outside the service area). **Table 5** provides a summary of the tax rates for property owners located both inside and outside of the service area boundary.

**Table 5 – Sewer District Assessment (Tax) Summary**

| Location | Bond Amount | Debt Service Sewer System[6] | Existing Bonds Coming Off Tax-Roll[7] | Adjusted Debt Service for Sewer System | Total Assessed Value[8] | Annual Sewer District Assessment (Per $500K A.V.) |
|---|---|---|---|---|---|---|
| Inside Phase 1 Service Area | $17,085,000[9] | $571,397 | ($215,185) | $356,213 | $75,992,148 | $2,343.74/yr |
| Outside Phase 1 Service Area | | $244,885 | ($92,222) | $152,622 | $2,856,958,937 | $26.72/yr |

The debt service analysis was also evaluated based on the Village receiving no grant subsidy to illustrate a conservative depiction of the overall sewer system assessment. However, the Village intends to vigorously pursue various grant opportunities to further offset the cost of the sewer system. Any amount of grant supplement will lower the annual debt service rates depicted in **Table 5**.

**Table 6** depicts total annual sewer system costs for properties **inside** the Phase 1 service area. Since the NYS land Use Code for properties identified as residential within the core commercial area were identified to consist of other uses via field survey (i.e. professional offices, retail spaces, and multi-family rental units), these properties are not representative of "typical" residential use; and the total sewer system costs for residential properties inside the service area are listed as "n/a" in **Table 6**. These examples are intended to provide an overview and be representative of the range of total annual costs expected under this plan.

**Table 6 – Annual Charges for Properties Inside the Phase 1 Service Area**

| Property Type | 2017 Assessed Value[10] | Flow Allocation (SFE) | 2017 Village Tax (approx.) | Annual Sewer Assessment (Tax) | Annual User Charge (Rent) | Total Annual Cost ($) (Tax + Rent) |
|---|---|---|---|---|---|---|
| Restaurant (20 seat @ 30 GPD/seat) | $500,000 | 2.67 | $1,550 | $2,344 | $801 | $4,695 |
| Retail (700 SF @ 0.03 GPD/SF) | $220,000 | 0.09 | $680 | $1,031 | $28 | $1,739 |

[6] The Total debt service ($816,281) for the sewer district has been distributed 70% to properties inside the service area and 30% to properties outside the service area.

[7] The Village intends to re-allocate $229,219 and $78,188 from existing tax roll collection for the Village Hall Construction Bond and Village Hall Property Acquisition Bond that are expected to be satisfied in 2020 and 2022, respectively to reduce the net tax increase associated with the anticipated Village Sewer System bond. Therefore, the annual debt service for the Village Sewer System bond is reduced by $307,406 ($229,219 + $78,188) that is distributed 70% to properties inside the service area and 30% to properties outside the service area.

[8] Total assessed value is based on the Village of Westhampton Beach 2017 assessment roll.

[9] Bond amount is based on the 2022 total project cost identified in Table 4 plus a 2% administration charge from loan administrator.

[10] 2017 Assessed Values are representative estimates based on true market values identified from information provided by the Village Assessor's office and represent the arithmetic average values for the property types listed.

| Property Type | 2017 Assessed Value[10] | Flow Allocation (SFE) | 2017 Village Tax (approx.) | Annual Sewer Assessment (Tax) | Annual User Charge (Rent) | Total Annual Cost ($) (Tax + Rent) |
|---|---|---|---|---|---|---|
| Condos (36 units @ 225 GPD/unit) | $5,000,000 | 36 | $16,200 ($450/year/unit) | $23,438 ($651/year/unit) | $10,800 ($300/year/unit) | $50,438[11] ($1,401/year/unit) |
| Residence (300 GPD) | $700,150 | n/a | n/a | n/a | n/a | n/a |

**Table 7** depicts total annual sewer system costs for properties **outside** the Phase 1 service area. The property types summarized in Table 6 are replicated in Table 7 to illustrate the hypothetical total annual charges that the same properties would pay if they were located outside the Phase 1 service area. These examples are intended to provide an overview and be representative of the range of total annual costs expected under this plan.

**Table 7 – Annual Charges for Properties Outside the Phase 1 Service Area**

| Property Type | 2017 Assessed Value[12] | Flow Allocation (SFE) | 2017 Village Tax (approx.) | Annual Sewer Assessment (Tax) | Annual User Charge (Rent) | Total Annual Cost ($) (Tax + Rent) |
|---|---|---|---|---|---|---|
| Restaurant (20 seat @ 30 GPD/seat) | $500,000 | 2.67 | $1,550 | $27 | n/a | $1,577 |
| Retail (700 SF @ 0.03 GPD/SF) | $220,000 | 0.09 | $680 | $12 | n/a | $692 |
| Condos (36 units @ 225 GPD/unit) | $5,000,000 | 36 | $16,200 ($450/year/unit) | $267 ($7.42/year/unit) | n/a | $16,467[13] ($457.42/year/unit) |
| Residence (300 GPD) | $700,150 | 1.33 | $2,350 | $37 | n/a | $2,387 |

## 8.0 AFFORDABILITY SUMMARY

The United States Environmental Protection Agency (USEPA) published guidance documents in 1995, which outlined methods to determine what would be affordable for a wastewater project within a community. These guidance documents identified two screening mechanisms to determine a projects' affordability. The first mechanism, referred to as the Residential Indicator (RI), compares the average annual per household cost within a special district to the median household income. When the RI is determined to be 2% or greater of the median household income, the project is anticipated to cause an economic hardship on the community, and deemed not affordable. The second mechanism, referred to as the Financial Capability Indicator (FCI), evaluates the community's bond rating, net debt, median household income, local unemployment rate, service area tax burden and property tax collection rate.

[11] The total tax + rent divided by 36 units equates to an annual cost per unit of $1,401. Existing per unit expense for Village tax is $450.

[12] 2017 Assessed Values are representative estimates based on true market values identified from information provided by the Village Assessor's office and represent the arithmetic average values for the property types listed.

[13] The total tax + rent divided by 36 units equates to an annual cost per unit of $458. Existing per unit expense for Village tax is $450.

For purposes of this Map and Plan, the RI is used to determine the annual affordability limit for the single family residential properties within the Village.

The median household income data for the Village of Westhampton Beach was documented to be $82,321 for 2015.[14] The rate at which the median household income for the Village has increased between 2000 and 2014 was 38.93%.[15] The total percent increase in median household income over this 4-year period equates to an annual rate of increase equal to 2.78% per year. This rate was used to project the 2014 median household income to the second half of construction (2022) to correlate the RI with the escalated construction costs. The adjusted 2022 median household income was calculated to equal $99,745 (i.e. $[1 + 0.0973]^8 \times \$82,321$).

Applying this adjusted median household income to the USEPA methodology described above results in an RI for the Village of Westhampton Beach equal to approximately $1,994.90 per year. Therefore, the annual cost for a residential property owner is significantly less than the RI for the Village. The RI method for affordability was deemed not appropriate to evaluate the affordability for all properties located inside the service area since most properties located inside the service area are commercial uses. However, when the RI is compared to the per unit annual cost for the example depicting a condominium development inside the Phase 1 service area, you find the cost increase to be $593.90 less than the RI (i.e. $1,994.90 - $1,401.00). Therefore, the project is considered affordable under this USEPA methodology.

Furthermore, Village personnel have indicated properties with restaurant uses located inside the Phase 1 service area are currently spending approximately $15,000 - $20,000 annually for maintenance of their existing onsite sanitary disposal systems. As such, these properties will not experience a significant change to their annual expenditure; dry-use properties such as retail space will experience an increase in annual expenses. However, the increased annual expenses associated with the sewer system do not outweigh the potential financial benefits that property owners can realize due to build-out based on zoning and the ability to expand their existing rentable square footage.

[14] Data was obtained from http://www.civicdashboards.com/city/westhampton-beach-ny-16000US3680181/
[15] Data was obtained from http://www.usa.com/westhampton-beach-ny.htm

# FIGURE 1

Inc. Village of Westhampton Beach Overview Map

VILLAGE OF WESTHAMPTON BEACH BOUNDARY

QUANTUCK BAY

MONIEBOGUE BAY

EAST MORICHES BAY

ATLANTIC OCEAN

LEGEND:

SURFACE WATER

SCTM PARCEL BOUNDARIES

VILLAGE OF WESTHAMPTON BEACH BOUNDARY

# Village of Westhampton Beach Overview Map

SCALE: 1" = 1000'-0"

N

H2M architects + engineers
Melville, NY 11747 | New City, NY 10956
Albany, NY 12205 | Parsippany, NJ 07054
White Plains, NY 10601 | Howell, NJ 07731

# FIGURE 2

Inc. Village of Westhampton Beach Sewer System Map

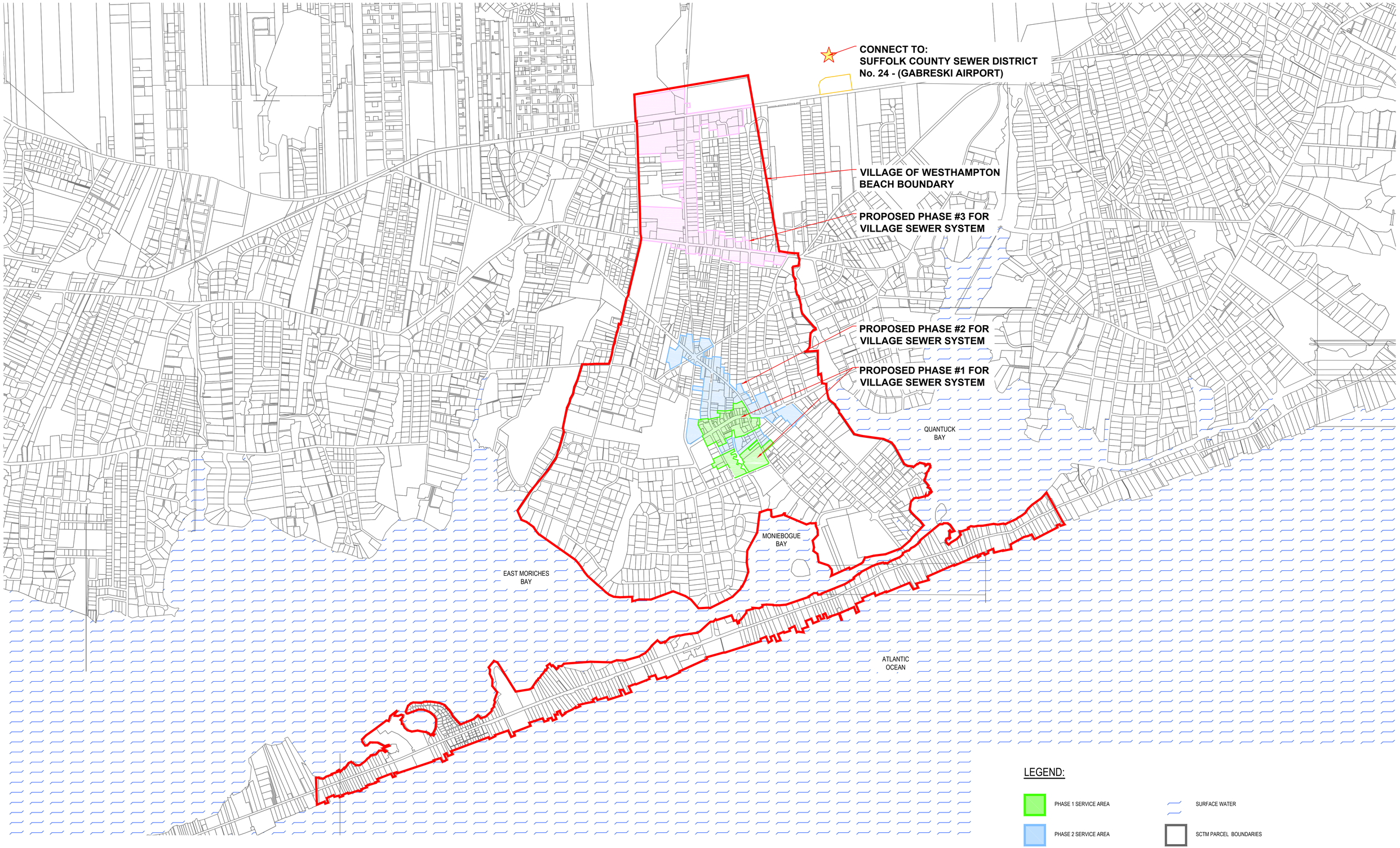


LEGEND:

- PHASE 1 SERVICE AREA
- PHASE 2 SERVICE AREA
- PHASE 3 SERVICE AREA
- SURFACE WATER
- SCTM PARCEL BOUNDARIES
- VILLAGE OF WESTHAMPTON BEACH BOUNDARY

NOTE: THE PHASE 4 SERVICE IS COMPRISED OF ALL TAX PARCELS LOCATED WITHIN THE VILLAGE BOUNDARY BUT NOT WITHIN THE PHASE 1, 2 OR 3 SERVICE AREAS. WASTEWATER GENERATED BY THE PHASE 4 SERVICE AREA PARCELS WILL BE TREATED VIA INNOVATIVE ADVANCED ONSITE NITROGEN REMOVAL SYSTEMS.

# Village of Westhampton Beach Sewer System Overview Map

SCALE: 1" = 1000'-0"

N

H2M architects + engineers
Melville, NY 11747 | New City, NY 10956
Albany, NY 12205 | Parsippany, NJ 07054
White Plains, NY 10601 | Howell, NJ 07731

# FIGURE 3

Phase 1 Service Area Infrastructure Layout and Design Flow Summary

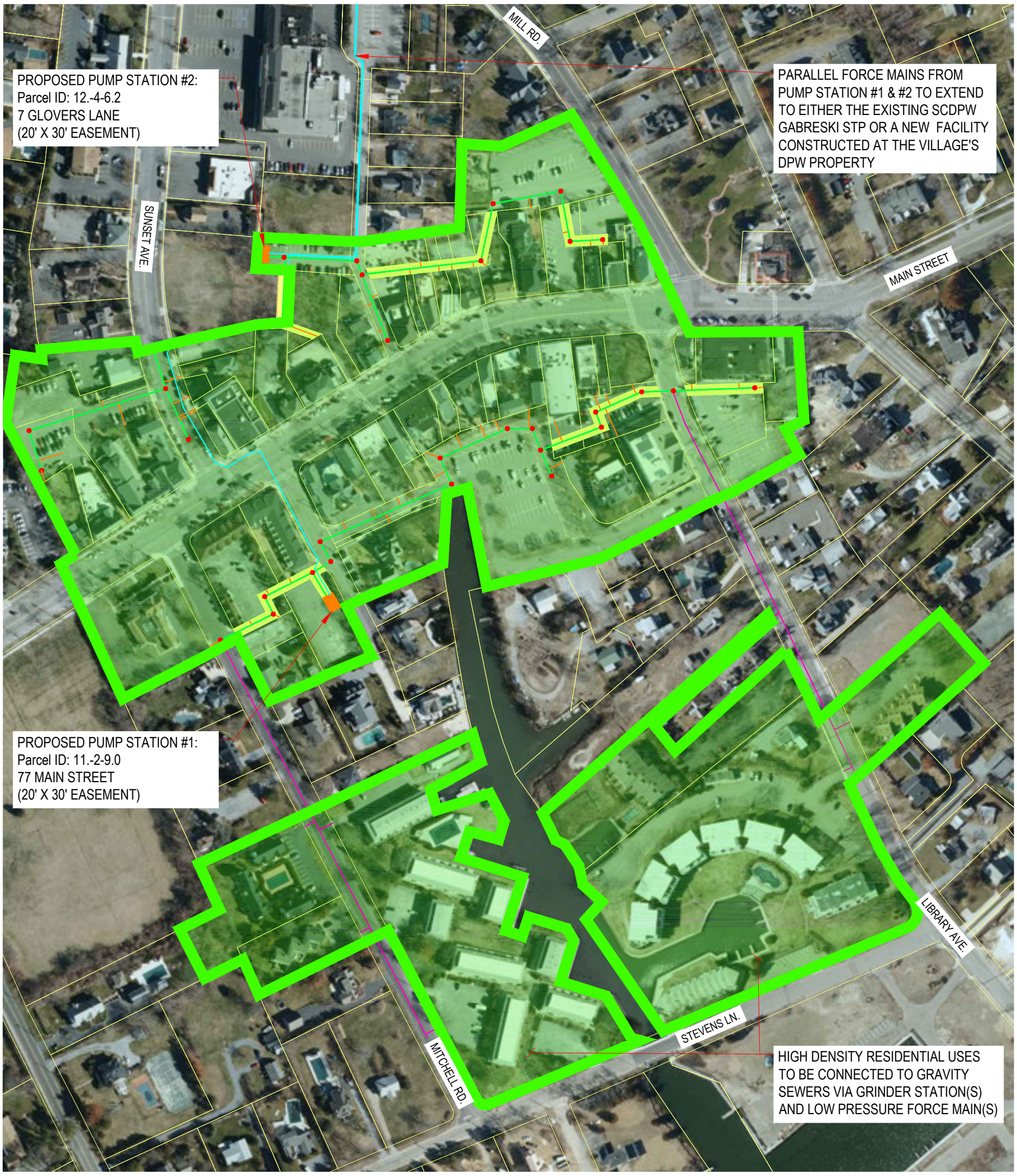


# Phase 1 Sewer Service Area Map

SCALE: NTS

N

* AERIAL BACKGORUND IMAGERY WAS OBTAINED FROM THE NEW YORK STATE GIS CLEARINGHOUSE WEBSITE:http://gis.ny.gov/gateway/mg/

Sanitary Flow Projection based on SCWA usage records: (ADF approx. 60,000 gpd)

| NYS Land Use | Description | Area | | Tax Parcels | Existing Sanitary Flow | | Existing Sanitary Flow | |
|---|---|---|---|---|---|---|---|---|
| | | Acerage | % Acreage | Tax Parcel Count | SCWA - summer | % SCWA Flow | SCWA - winter | % SCWA Flow |
| 100 | Agricultural | 0.00 ac. | 0.0% | 0 parcels | 0 gpd | 0.0% | 0 gpd | 0.0% |
| 200 | Residential | 21.95 ac. | 70.2% | 88 parcels | 33,440 gpd | 55.7% | 5,580 gpd | 9.3% |
| 300 | Vacant Land | 0.34 ac. | 1.1% | 1 parcels | 400 gpd | 0.7% | 400 gpd | 0.7% |
| 400 | Commercial | 8.70 ac. | 27.8% | 66 parcels | 24,400 gpd | 40.7% | 11,200 gpd | 18.7% |
| 500 | Recreation & Entertainment | 0.00 ac. | 0.0% | 0 parcels | 0 gpd | 0.0% | 0 gpd | 0.0% |
| 600 | Community Services | 0.30 ac. | 1.0% | 1 parcels | 1,760 gpd | 2.9% | 300 gpd | 0.5% |
| 700 | Industrial | 0.00 ac. | 0.0% | 0 parcels | 0 gpd | 0.0% | 0 gpd | 0.0% |
| 800 | Public Services | 0.00 ac. | 0.0% | 0 parcels | 0 gpd | 0.0% | 0 gpd | 0.0% |
| 900 | Wild, Forested, Conservation Lands & Public Parks | 0.00 ac. | 0.0% | 0 parcels | 0 gpd | 0.0% | 0 gpd | 0.0% |
| | TOTAL . . . | 31.29 ac. | 100% | 156 parcels | 60,000 gpd | 100.0% | 17,480 gpd | 100.0% |

LEGEND:

- SCTM PARCEL BOUNDARIES
- PROPOSED GRAVITY SEWER MAIN HOLE
- PROPOSED 3" Ø LPS MAIN
- PROPOSED SEWER SERVICE AREA
- PROPOSED SEWER SERVICE LATERAL
- PROPOSED SEWER SYSTEM EASEMENT LOCATIONS (20' WIDE)
- PROPOSED GRAVITY SEWER MAIN
- PROPOSED PUMP STATION SITE
- PROPOSED FORCE MAIN

CLIENT

**Incorporated Village of Westhampton Beach**

PROJECT #: WHBV 16-01

DATE: 7/14/2016

H2M architects + engineers

Melville, NY New City, NY Albany, NY Parsippany, NJ

C:\Users\nbono\appdata\local\temp\AcPublish_692\Sewer Service Area Map_DRAFT.dwg Last Modified: Oct 13, 2017 - 12:45pm Plotted on: Oct 13, 2017 - 1:01pm By nbono

# APPENDIX A

Quantifying Nitrogen Loading to from Village of Westhampton Beach to surrounding Water Bodies and their Mitigation by Creating a Sewer District, prepared by Dr. Christopher J. Gobler, PhD

# QUANTIFYING NITROGEN LOADING FROM THE VILLAGE OF WESTHAMPTON BEACH TO SURROUNDING WATER BODIES AND THEIR MITIGATION BY CREATING A SEWER DISTRICT

**CHRISTOPHER J. GOBLER, PHD**

**JUNE, 2017**

Stony Brook University
School of Marine and Atmospheric Sciences

## EXECUTIVE SUMMARY

The Village of Westhampton Beach is located within the watersheds of Moniebogue Bay, Quantuck Bay, and Moriches Bay, all water bodies declared impaired by the New York State Department of Environmental Conservation (NYSDEC). For more than 30 years, these waters have been plagued by recurrent brown tides more frequently than any other water body across Long Island leading to significant losses of shellfish and eelgrass. High levels of nitrogen have been detected in the groundwater under the Village and this nitrogen flows to coastal water bodies, promoting these brown tides while also contributing toward other nitrogen-related impairments including the loss of salt marshes, the loss of eelgrass, poor water clarity, low oxygen levels, and poor conditions for fish populations. Any effort to reduce the delivery of nitrogen from the Village of Westhampton Beach will help mitigate these conditions. This study was undertaken to estimate the effect of sewering various portions of the Village of Westhampton Beach on the total nitrogen loads to Eastern Moriches, Moniebogue Bay, and Quantuck Bay, as well as the water quality within these systems. A nitrogen loading model was developed that considered nitrogen delivered to these waterbodies from three types of fertilizers, septic systems, the atmosphere, surface-run-off, storm drains, sediments, and birds. The model was run for current conditions as well as for four phases of wastewater remediation for the Village including the creation of phased sewer districts and upgrades of on-site septic systems. The subsequent effects on water quality in the surrounding water bodies was quantified. The models demonstrate that wastewater is currently the largest source of nitrogen to East Moriches, Moniebogue, and Quantuck (58%, 78% and 62% of the external nitrogen load). The completion of the proposed phase 1 sewering of Main Street would divert nearly 5,000 lbs of nitrogen away from Moniebogue Bay annually, reducing its total nitrogen load by 24% and its external nitrogen load by 30% but would not significantly impact East Moriches and Quantuck Bays which are outside of the Main Street watershed. Phases 2 and 3 would expand sewering to regions beyond Main Street bringing a 30% reduction of total nitrogen load and ~40% reduction of external loads to Moniebogue Bay and modest reductions to East Moriches and Quantuck Bays (0 – 5%). Phase 4 of the plan would bring alternative, denitrifying septic systems to the remainder of the Village and lead to the largest total nitrogen reductions to all waterbodies with the total load reduction of 12% for East Moriches Bay, 56% for Moniebogue Bay, and 8% for Quantuck Bay and external loads reductions of 18% for East Moriches Bay, 70% for Moniebogue Bay, and 13% for Quantuck Bay. Given that Moniebogue Bay is the only water

body fully within the Village's watershed, and that the Village comprises ~20% of the other watersheds, the 70% reduction in nitrogen load to this water body is the most realistic assessment of the efficacy of this project. Upon the reduction of nitrogen loads to coastal waters, it is expected that the intensity of brown tides and other algal blooms would be reduced. Additional ecosystem benefits would include improved nighttime oxygen levels, improved water clarity, increases in submerged aquatic vegetation, and improved conditions for pelagic fish. Given that recent research at Stony Brook University has determined that waterfront or near-waterfront home values can be strongly effected by water clarity, improved water clarity could financially benefit home owners in the region as well as associated tax revenues.

**Task 1 Summarize the current status of water quality within Moniebogue and Quantuck Bay and known relationships to excessive nitrogen loading in a brief report.**

Estuaries and other coastal ecosystems have suffered multiple anthropogenic insults in recent decades, including pollution, eutrophication, overfishing of fish and shellfish, and loss of key habitats, such as seagrass beds, salt marshes, mangroves, and oyster reefs (Valiela et al., 1992, Nixon 1995, Cloern 2001, Lotze et al. 2006). At the same time, resource value of estuaries and their various habitats has increased, as measured by monetary value (Costanza et al. 1997) or by ecosystem services provided to marine and terrestrial species, including humans (Beck et al. 2001, Bruno et al. 2003, Johnson and Heck 2006). In response to the ongoing degradation of coastal ecosystems, the current challenge to scientists and managers is to implement management schemes for estuaries and coastal waters that balance preservation, conservation, and restored ecosystem function with ever-growing human populations and human demands in the coastal zone. Anthropogenic nutrient loading is a major threat to coastal systems; it has increased world-wide and led to eutrophication in many systems (Nixon 1995, Cloern 2001, de Jonge et al. 2002). Eutrophication can have severe effects on estuaries and estuarine resources, such as hypoxia/anoxia leading to loss of benthic habitat (Breitburg 2002), harmful algal blooms (Sunda et al. 2006), shading of seagrass beds (Dennison et al. 1993), and "regime changes" from a high-biomass benthos to a pelagic, microbially-dominated system (Lotze et al. 2006).

These broad global threats to estuaries are abundantly apparent in the coastal waters surrounding the Village of Westhampton Beach. As a relatively dense population hub with a main street and a series of condominiums in the Village, there is an abundance of nitrogen-rich wastewater entering the groundwater under the Village. A GIS-based map of nitrogen levels in groundwater across Westhampton measured by Suffolk County shows that levels are relatively low north of the Village and in the region of the Pine Barrens (<1 mg N per liter; Figure 1). In strong contrast, the Village of Westhampton Beach and surrounding regions stand out as having exceedingly high levels of nitrogen in groundwater, in some cases exceeding 20 mg nitrogen per liter (Figure 1). Due to the low elevation of the Village and shallow groundwater, this nitrogen is likely to quickly traverse through the aquifer and directly into coastal water with little processing or denitrification.

The first marine habitat to receive nitrogen-groundwater from the Village would be salt marshes or wetlands. Salt marshes serve as an important habitat for a variety of animals as multiple marine, terrestrial, and migratory species utilize these systems for food, shelter, and nurseries (Turner 1987; Leonard et al. 1999). Marine marshes can also serve as a buffer between the land and the adjacent marine ecosystem whereby land-derived nutrients and organic carbon may be retained and re-mineralized, potentially minimizing the effects of these constituents on the local

marine environment (Valiela et al. 1978; Valiela and Teal 1979; Dame et al. 1992). The expansion of human populations along coastlines during the past century has led to the alteration and degradation of many salt marsh habitats, a process which, in turn, can impact estuaries. There has been an accelerated loss of salt marshes in recent decades all around Long Island, but most notably along the south shore (NYSDEC 2014). What was once vegetated intertidal marsh has become non-vegetated underwater lands and/or mud flats. Moreover, high marsh vegetation is being converted to low marsh vegetation or has been built upon.

The salt marshes along Westhampton Beach and Moniebogue Bay, despite their vast, potentially healthy-appearance, are likely degrading. It was once thought that salt marshes had an unlimited capacity to remove nitrogen and were, therefore, not susceptible to damage due to nitrogen overloading. Earlier research had shown that excess nitrogen loading can lead to an expansion of above ground, leaf biomass of salt marshes, and thus, eutrophied salt marshes can appear green and lush (Valiela 2006). There is, however, now a scientific consensus that excessive nutrient loading promotes the collapse and destruction of salt marshes. Excessive nitrogen concentrations accelerate microbial decomposition of leaves, stems, and other organic biomass in marshes sediments and prevent the ability of these marsh communities to keep up with sea level rise (Turner et al. 2009). Nutrient enrichment decreases the dense below ground biomass of bank-stabilizing plant roots and increases microbial decomposition of organic matter within the soils that underlie the marsh biomass that can cause marshes to subside (Deegan et al. 2007, 2012). Longer term exposure to enhanced nutrient levels causes an increased probability of marsh channel destabilization (Deegan et al. 2012). The tall marsh grasses in a nitrogen-enriched system produce fewer roots and rhizomes – plant attributes that are critical to stabilizing the edges and soils of marshlands (Deegan et al. 2007, 2012). The poorly rooted grasses eventually grow too tall and then fall over, thereby destabilizing the creek-edge and bay-edge marsh, causing it to slump and exposing soils to erosive forces (Deegan et al. 2012). The destabilization of creek-edge and bay-edge marshes makes these areas much more susceptible to the constant tugging and pulling of waves, accelerating erosion, and the loss of stabilizing vegetation. Ultimately, this process of root degradation and collapse of salt marshes leads to their conversion to mud flats (NYSDEC 2014). These conclusions are consistent with those of Stony Brook University scientists who have found that marsh loss in eutrophied regions, is driven by nitrogen and organic matter loading, which perturb the salt marsh sulfur cycle and lead to plant die-offs and the deterioration of marsh peat (Kolker et al. 2010).

Tidal wetlands are critically important for protecting coastal communities such as the Village of Westhampton Beach from storm damage by dissipating wave energy and amplitude, reducing erosion from waves by slowing water velocity, and by stabilizing shorelines through sediment deposition (Möller et al., 1999). Some studies estimate that more than half of normal wave energy is dissipated within the first 3 meters of marsh vegetation, such as cord grass, while

other studies concluded that wave height is reduced by 80 percent over fairly short distances as waves travel through marsh vegetation (Anderson et al. 2013; Jadhav and Chen 2012; Ysebaert et al. 2011). In addition, wave energy dissipation rates over the salt marsh are more than dramatically higher than non-marsh regions and are therefore important for maintaining a natural defense for coastal communities against storm surge, waves, and flooding (NYSDEC 2014). This is very obviously in the vicinity of the Village of Westhampton Beach. Large stands of salt marshes line the entire eastern bank of Moniebogue Bay (Figure 2). During Hurricane Sandy, these salt marshes absorbed a large amount of tidal flooding, protecting many regions of the Village of Westhampton Beach (Figure 2). In contrast, regions on the west side of Moniebogue Bay without salt marshes were badly flooded (Figure 2). Beyond storm events, the amount of sea level rise in the next 30 years may also pose a risk to coastal communities such as the Village of Westhampton Beach. In a manner similar to Hurricane Sandy, the projected sea level rise for the next 30 years is likely to lead to flooding of some properties and homes along the western shore of Moniebogue Bay whereas the salt marshes on the eastern shore should protect the homes behind it, as well as the Village (Figure 2). Importantly, however, these projections are assuming the current salt marshes remaining intact. If nitrogen loading continues or accelerates, they could weaken and experience a die-back and future flooding might be worsened (Deegan et al., 2012; NYSDEC, 2014). Alternatively, nitrogen mitigation could strengthen these salt marshes and enhance the protection they offer (Deegan et al., 2012; NYSDEC, 2014). Therefore, while the loss of tidal marshlands results in a direct reduction in coastal resiliency and the ability of these natural features to help protect coastal communities along the Village of Westhampton Beach from future storm surges, projects that have the potential to remove significant amounts of nitrogen are likely to encourage salt marsh recovery and enhance community protection.

Beyond the shoreline, the release of nitrogen from groundwater into coastal waters has a strong effect on the surrounding estuarine ecosystems since nitrogen is considered the limiting element for primary producers (Nixon, 1995). Hence, more nitrogen will lead to more growth of algae. An examination of 40 years of marine monitoring data from Suffolk County's Department of Health Services clearly illustrates the impact excessive nitrogen loading is having on regional estuaries and water quality. In compiling all of the data from Shinnecock, Quantuck, and Moriches Bay from 1976 - 2014, no site monitored had higher levels of total nitrogen in bay waters than Quantuck and Moniebogue Bay (Figure 3). The precise levels (~0.6 mg nitrogen per liter) exceeded the guidelines recommended by US EPA for many estuaries including the Peconic Estuary and Chesapeake Bay (< 0.4 mg per liter; PEP, 2001). These high nitrogen levels have a cascading effect on the entire estuarine ecosystem. As mentioned above, nitrogen is the limiting element in estuaries (Nixon, 1995) including Quantuck Bay (Gobler et al., 2004, 2011). Hence, these high nitrogen levels lead to algal blooms. The highest levels of chlorophyll *a* (a proxy for the biomass of microalgae) anywhere across Shinnecock, Quantuck, and Moriches Bays (Figure 3) and across most of Long Island (Figure 4) are found in Moniebogue and Quantuck Bays. In

fact, of >30 sites monitored by the Gobler lab since 2014, only the Forge River has had higher levels (Figure 4). During late spring and summer months, these algae are typically dominated by the brown tide alga, *Aureococcus anophagefferens* (Gobler et al., 2004, 2011). Such brown tides are a serious ecosystem threat as they are lethal and toxic to bivalves such as clams, oysters, scallops, and mussels and they can kill of seagrasses (Gobler and Sunda, 2012). During the past 30 years, no place on Earth has had more intense brown tides than Quantuck Bay, eastern Moriches Bay, and western Shinnecock Bay (Figure 3). Consistent with Suffolk County's data, monitoring across all of Long Island by the Gobler Laboratory has revealed the precise same trend (Figure 5). In fact, during the past decade, these brown tides have become more frequent and more severe than they had been from 1985 – 2005 (Figure 6). Beyond brown tides, an even more dangerous algae is *Alexandrium*, a dinoflagellate that synthesizes saxitoxin, a compound 1,000-times more potent and dangerous than cyanide (Anderson, 1997). This algae and toxin can cause paralytic shellfish poisoning when humans consume shellfish contaminated with saxitoxin (Anderson, 1997). There have been four PSP-induced shellfish bed closures in Shinnecock Bay during the past seven years and high levels of *Alexandrium* have been detected in Moniebogue Bay and Quantuck Bay (Figure 7). Blooms of *Alexandrium* and *Aureococcus* have both been shown to be strongly promoted by nitrogen loading (Hattenrath et al., 2010; Gobler et al., 2005, 2011).

Algal blooms can have additional, secondary negative impacts on marine life. Both the occurrence of brown tides and the occurrence of algal blooms in general can make coastal waters extremely turbid and murky (Gobler and Sunda, 2012). Accordingly, the region of Quantuck Bay, eastern Moriches Bay, and western Shinnecock Bay is the epicenter for low water clarity across the south shore of Long Island (Figure 3). Monitoring by the Gobler laboratory across all of Long Island during the past three years has demonstrated that Moniebogue Bay and Quantuck Bay have the lowest water clarity of any locations monitored ($n$=30; Figure 8). Poor water clarity has a host of primary and secondary ecosystem and economic ramifications. Firstly, low light levels from poor water clarity can lead to the loss and demise of seagrass meadows that are a critical nursery habitat for juvenile finfish and shellfish (Dennison et al., 1993). Also, recent research at Stony Brook University has determined that waterfront or near-waterfront home values can be strongly effected by water clarity, with low water clarity being associated with lower home values.

Finally, low light levels associated with poor water clarity can minimize the amount of photosynthesis in an ecosystem and thus contribute toward low oxygen levels. The decay of intense algal blooms can also promote low oxygen levels (Diaz and Rosenberg, 2008). Quantuck Bay, eastern Moriches Bay, and western Shinnecock Bay have the lowest oxygen levels across Long Island's southeast shoreline (Figure 3) and monitoring across Long Island has demonstrated that this region has some of the lowest oxygen levels anywhere (Figure 9), commonly falling below the minimum standard for oxygen set by the NYSDEC of 3 mg per liter. Low oxygen levels are associated with the loss or death of marine life (Diaz and Rosenberg, 2008).

In summary, the groundwater flowing from the Village of Westhampton Beach into Moniebogue and Quantuck Bay is highly enriched in nitrogen. This nitrogen threatens severe future flooding in the region due to the nitrogen-induced degradation of salt marshes. Nitrogen loading is promoting brown tides, *Alexandrium*, and other algal blooms that are reducing light and oxygen levels and negatively impacting finfish, shellfish, and seagrasses. The severity of the problem in the Village of Westhampton Beach is clear as the near-by coastal water bodies have some of the worst water quality on Long Island. Nitrogen mitigation is needed to improve water quality and protect homes in the region.

## TASK 2. DEVELOP A DYNAMIC MODEL FOR NITROGEN LOADING RATES AND SOURCES FOR THE VILLAGE OF WESTHAMPTON BEACH TO MONIEBOGUE, QUANTUCK, AND EASTERN MORICHES BAY.

A Nitrogen Loading Model was developed to quantify the total dissolved nitrogen input into the waterbodies surrounding the Village of Westhampton Beach. The original Nitrogen Loading Model (NLM; Valiela et al., 1997) is available via a web-based modeling tool (nload.mbl.edu) described in Bowen et al. (2007) and used in Bowen and Valiela (2004) and recently in Kinney and Valiela (2011) among others. The NLM uses information about land use in a defined watershed to predict both the amount of nitrogen that is released into the watershed from various sources and how much of it ends up in a corresponding waterbody. This model requires accurate land-use and land cover information, such as area of agriculture, residential areas, and impervious surfaces as well as other environmental data that was gathered for this project from scientific literature, NYS and Suffolk County GIS data bases, USGS reports, the Town of Southampton, Suffolk County, and the US census as described in Table 1. Hence, for this project, this original model was modified to utilize more accurate, local data sources, although the underlying assumptions and several critical components were not altered. As an example, originally average roof area was multiplied by the number of buildings to approximate the total area of roofs in a watershed. With more accurate, GIS-based data, the area of each roof in the watershed was calculated and then all the individual areas were summed together.

The NLM is a good fit for watersheds around the Village of Westhampton Beach that are a mix of residential, forested, and forest and is one of the most inclusive nitrogen loading models regarding the transformation and transport of nitrogen as it travels from watershed to estuaries.. The NLM assumes that the primary transport mechanism for nitrogen entering the bays from each watershed is groundwater flow. This assumption is consistent with data available for the region as the little inflow to the bays from streams is actually derived from groundwater and geologically, Long Island is composed of unconsolidated sands that allow for relatively easy transport of groundwater to coastal lagoons. The NLM assumes that all nitrogen entering the waterbodies from external sources originates from atmospheric deposition to the watershed, wastewater, or fertilizer. Valiela et al. (1997) validated this model by comparing its nitrogen load prediction to empirically measured nitrogen levels. They found the NLM's results to be statistically indistinguishable from measured concentrations and that a linear relationship exists between the percent contributions from wastewater that the NLM predicted and the stable isotope signature for wastewater expected from known isotopic N values of nitrate in groundwater. A recent study by Gobler (2016) came to the same conclusion for the south shore of Long Island.

The NLM utilizes multiple features, which were obtained or derived from Suffolk County and New York State datasets for the watersheds: number of people; number of people within 200

meters of shore; area of roofs; surface area of the watersheds; area of freshwater wetlands; area of agriculture; area of golf courses; lawn area on parks, athletic fields, and residential parcels; freshwater ponds; and, various impervious surfaces (Table 1). The model also includes a list of constants assigned values based on recommendations from Suffolk County (Table 1).

**Watershed delineation**

The surface extent of the East Moriches Bay, Moniebogue Bay, and Quantuck Bay watersheds were determined using a combination of CDM's ground water travel time analysis and groundwater flow patterns, which have been previously found to generally follow hydraulic gradients established by surface topography (Figure 10). Surface topography was determined using United States Geological Survey LiDAR data. Watersheds were limited on the northern edges by the 50-year groundwater travel time line provided by H2M, with the western edge of the East Moriches watershed was drawn roughly half way down the complete Moriches watershed, and the Quantuck Bay watershed as previously established (Gobler, 2016). As described later in this document, the multi-phase wastewater mitigation strategy being implemented by the Village encompasses all of the Moniebogue Bay watershed, 23% of the western Quantuck Bay watershed, and 19% of the eastern Moriches Bay watershed (Figure 11).

**Atmospheric Deposition of Nitrogen**

Atmospheric nitrogen is delivered via precipitation (wet) or via dust (dry). Nitrogen that arrives in the watersheds through wet and dry deposition may have a varied contribution to waterbody nitrogen load depending on where the nitrogen lands. Different land use types (impervious, vegetation, developed) alter the amount of nitrogen that passes through to groundwater and enters a waterbody. Nitrogen deposited on vegetation has time to be assimilated by plants and organisms in the soils, and/or may be denitrified in the aquifer. Nitrogen that lands on impervious surfaces can runoff directly into a stream, or bay, skipping assimilation. It may also flow through a municipal separate stormwater sewer system (MS4) where it eventually seeps into sandy soils and discharges into coastal zones. In general, when atmospherically deposited nitrogen lands on impervious surfaces, less is removed before entering the waterbodies.

Nitrogen inputs from wet and dry deposition were determined using the National Atmospheric Deposition Program (NADP; wet) and the EPA's Clean Air Status and Trends Network (CASTNET; dry). Data from the closest NADP monitoring station is in Southold, NY, 10 miles from eastern Shinnecock Bay, were utilized. Two years (2010-2011) of monitoring from CASTNET's three closest monitoring stations (Washington Crossing, NJ, Claryville, NY, and Abington, CT) were averaged to determine the dry deposition input. Atmospheric deposition rates often only consider inorganic forms of nitrogen despite the fact that organic nitrogen contribution to atmospheric deposition can be considerable. While direct measurements are not available, a 1:1 ratio of inorganic to organic deposition of nitrogen has been suggested by

Cornell et al. (1995). Hence, the value of wet and dry deposition was doubled to account for organic nitrogen loading from these sources. As a result total input for atmospheric deposition amounted to 5.4 kg N per hectare $yr^{-1}$ (=4.8 lb N per acre per year). Direct atmospheric deposition rate to the bays was added to the nitrogen load from wastewater and fertilizer for a final nitrogen load rate for each subwatershed.

Nitrogen runoff from driveways, roofs, and other impervious surfaces was attenuated because it first passes through turf and/or soils. All atmospheric depositions also go through a limited amount of denitrification in the aquifer. The atmospheric deposition of nitrogen is decreasing on Long Island and the Northeast in general, a trend expected to continue due to changes in industrial atmospheric discharge in the Midwest (Gobler, 2016).

The land-use and land cover information used for the NLM was ascertained through the Suffolk County Land Use and Land Cover parcel dataset for all watersheds. This layer includes all taxable parcels, but areas like public roads are not covered. All inputs to the NLM and their sources are referenced in Table 1. Impervious land areas were estimated by finding where the Normalized Difference Vegetation Index (NDVI) was low (NDVI<80). The NDVI was created from the USGS's high resolution orthoimagery. Parcels that were known by land type to not have any impervious surfaces were removed to improve the accuracy. The removal included the classes open water, vacant land, preserved/forested land, and agricultural land. Road area was estimated by limiting this impervious layer to areas where land parcels did not exist. Driveway areas were estimated by limiting the impervious layer to residential parcels and where the height of objects on the properties were close to zero. The height of objects on properties (trees, buildings, decks, etc.) was determined by subtracting a Digital Elevation Model from a Digital Surface Model. These models were created from the same USGS LiDAR point cloud data. Total roof area was quantified by summing the area of each building footprint within the watershed. Footprint data was supplied by Suffolk County.

**Wastewater**

The contribution of nitrogen load to the bays from wastewater was calculated in the NLM by multiplying the nitrogen released per person by the number of occupants in the watershed. The number of occupants for most parcels in each watershed was determined by using CDM's model results. They determined that one residential parcel produces 300 gpd of sewage. Using 2010 census data for the region, occupancy of 2.8 people per one year round residential parcel. Hence, it was estimated that 2.8 people produce 300gpd. With this ratio and the modeled sewage output, the occupancy for other property types was determined. Most commercial and industrial properties were included in H2M's study, but it did not fully cover the watersheds. Year-round residential properties outside of H2M's study were assigned 2.8 people and seasonal occupancy properties were assigned 0.92 people assuming three months of occupancy and an average of 5.5 people per

seasonal home, numbers acquired from the recent NYSDEC's Long Island Nitrogen Action Plan Subwatersheds study. Properties were determined as year round or seasonal based on the permanent address of the owner.

Differing levels of nitrogen were then removed from wastewater loading depending upon the type of on-site sewage disposal system (septic or cesspool) and the system's distance from shore as there is significantly less nitrogen removed when septic tanks and cesspools are within 200 m of coastal waters. Residential and commercial parcels have either an individual septic tank system or cesspool, which differ slightly in the fraction of nitrogen released to the underlying aquifer, with the less effective cesspools releasing more. In Suffolk County, a law was passed in 1973 requiring all newly constructed buildings to include a septic tank system instead of a cesspool. For this study, half of the residential and commercial uses were assumed to have cesspools. The study area does not contain any municipal wastewater treatment facilities.

The NLM breaks down the nitrogen removal in septic tank and cesspool-based systems into three steps: removal in the tank, removal in leach rings, and removal in septic plumes (Table 1). Cesspools on Long Island are typically composed of cylinders arranged vertically, eliminating any traditional leaching rings and the associated nitrogen removal therein. Although there is a disposal pit associated with these vertically structured cesspools systems, only a small amount of nitrogen is removed in this part of the system (<10%).

**Fertilizer**

The NLM considers fertilizer input from agricultural uses, golf courses, parks and athletic field lawns, and manicured residential lawns. The area of each type was calculated using ArcGIS processes; residential lawn areas were found by limiting high NDVI areas (NDVI>80) to residential parcels and to areas where the LiDAR height layer was near zero (height<0.05m). Golf courses were extracted from the Open Street Map and were further manually edited. Agricultural land was extracted from the Suffolk County Land Use and Cover dataset and manually verified with satellite imagery. Parks and athletic field parcels were also extracted from the Suffolk County Land Use and Land Cover dataset but were then further limited to lawn areas within those parcels with the same process used for residential lawns.

**Sediments, birds, and waterfowl**

To determine benthic flux, sediment core samples were obtained from three locations in the lake: one at the north sampling station, one at the longitudinal center of the lake and one near the southern portion of the lake. Cores were extracted using a box corer dropped from the side of the boat which was then brought to 0.3 m below the water surface. An acid-washed clear polycarbonate tube (length = 26.6 cm, diameter = 9.3 cm) was then inserted through the top of the corer to collect a sediment sample. While the tube was still in the sediment, a plastic cap was

placed on the bottom and then the top to capture the sediment sample and lake water immediately above the sediment. Cores were immediately placed in a cooler and transported back to the lab within one hour. A replicate and blank of the North End were also retrieved. Core samples were then incubated in similar light and temperature conditions to those measured at the lake bottom of each site. The samples were also aerated to achieve similar dissolved oxygen levels found in bottom waters of Quantuck Bay using an aquarium air pump. Physical parameters were monitored using an Onset® temp/light monitor. Water samples were extracted using an acid-washed 60 ml syringe with 15 cm tubing attached to the end. Water was drawn up slowly from just above the sediment water interface and care was taken to not draw up sediment. Samples were placed in acid-washed 60 ml bottles and frozen. The incubation was allowed to run for 12 hours with a total of 5 samples obtained per core as a time course during the incubation. Samples were filtered on combusted GFF and analyzed for nutrient levels. As filtered lake water was not added to replace the volume extracted, a mass balance correction was applied using the equation $(C_0 - C_1)\times V_0 = \Delta m$ where $C_0$ is the starting concentration, $C_1$ is the ending concentration, $V_0$ is the starting volume and $\Delta m$ is the mass change. This correction was applied to each time point in the series and the results were plotted against time. The resulting slope was used to determine the flux of nutrients out or into the sediment. Given that incubations were with mud and that sands generally do not provide benthic fluxes, flux rates were applied to only 75% of the bottom of the Lake, and the shoreline region which is at least 25% of the bay is sandy. In addition, it was assumed that benthic fluxes cease during winter (December through March) when cold temperatures restrict this process.

Final processes considered were direct atmospheric deposition to the water bodies (0.16 mole $m^{-2}$ $yr^{-1}$ as per Gobler (2016) and waterfowl. Fleming, R. and H. Fraser (2001) reported the nitrogen content of Canadian geese droppings as: 3,168 mg/goose/day and 608 to 1,819 mg/bird/day. Bird populations of East Moriches, Moniebogue, and Quantuck were estimated at 100, 100, and 300 birds, respectively, and a loading rate of 2,000mg/bird/day was used.

**Nitrogen loading rates to East Moriches, Moniebogue, and Quantuck Bays**

Recently, nitrogen loads have been quantified for many watersheds across Suffolk County. In most of these efforts, load calculations have been based exclusively on external nitrogen loads from watersheds to the ecosystem and have not considered processes within the waterbody. For this study, both internal and external nitrogen loads to East Moriches, Moniebogue, and Quantuck Bays were quantified. When considering external loads only, wastewater was the largest source of nitrogen to all three waterbodies. East Moriches, Moniebogue, and Quantuck Bays received 25,087, 6,909, and 11,889 kg N per year from wastewater sources representing 74%, 89%, and 80% of the total external nitrogen load to these three systems (Table 2). The second largest external nitrogen source was fertilizer comprising 19%, 7%, and 11% of the total nitrogen load to East Moriches, Moniebogue, and Quantuck Bays (Table 2). Atmospheric deposition onto the land,

the last external source, produced between 4 and 9% of the external nitrogen load to the watersheds.

When considering internal and external loads, wastewater was still the largest source of nitrogen to the waterbodies and represented 49%, 72%, and 53% of the total nitrogen load to East Moriches, Moniebogue, and Quantuck Bays respectively (Table 3; Figure 11-13). The next largest source of nitrogen was an internal source, specifically direct atmospheric deposition to the waterbodies that contributed 9,578, 1,043, and 4,072 kg N per year that represented 19%, 11%, and 18% of the total nitrogen loads to these systems (Table 3). Benthic fluxes, another internal source, followed with 7,647, 832, and 3,251 kg N per year representing 15%, 9%, and 15%. Thereafter, fertilizer emanating from homes, golf courses, and public parks were the fourth largest source of nitrogen contributing 13%, 6%, and 7% of the total nitrogen loads East Moriches, Moniebogue, and Quantuck Bays, respectively (Table 3; Figure 11-13). Atmospheric deposition to the land contributed less than 6% of the total nitrogen load and nitrogen from birds was below 1% for each waterbody (Table 3). These distributions of nitrogen loads are similar to recent studies in Suffolk County (Kinney and Valiela, 2011; Lloyd, 2014, 2016; Gobler, 2016).

Recently, the NYSDEC's Long Island Nitrogen Action Plan (LINAP) has made significant progress in accessing nitrogen loads to coastal water bodies. One of the earliest actions of LINAP has been the formation of the Suffolk County Subwatersheds Study and committee. As part of that effort, individuals from US EPA, USGS, Cornell University, Stony Brook University, Suffolk County, NYSDEC, and The Nature Conservancy have been collaborating to consider the manner in which nitrogen from land is transported to bays, harbors, lakes, and estuaries in Suffolk County. Through that process, two important and new consensus facts have been established. First, the existing cesspools and septic systems across Suffolk County have been found to be releasing significantly more nitrogen than had previously been thought. For example, in the original NLM model developed by Bowen et al., (2007) it was assumed that there was a 35% reduction in nitrogen within septic tanks, within leaching pits, and as groundwater traverses through the aquifer. While subsequent studies on Long Island began to reduce the removal rates for each step, LINAP has determined that the loss of nitrogen from each of these processes is between 5 and 10%, making wastewater a significantly stronger nitrogen source within the ecosystem (Figure 11-13). Another major change initiated by LINAP has been with regard to lawns. While NLM originally assumed lawns allowed 40% of nitrogen applied to enter groundwater, LINAP has compiled enough information to feel confident that the transmission rate is 30% (Table 1). Finally, although NLM had assumed there would be a large vadose zone removal of nitrogen applied to land surfaces, LINAP has concluded such a process does not exist on Long Island and thus it has been eliminated. This project used the most up-to-date information available regarding nitrogen loading on Long Island as developed by LINAP. As a result, the total nitrogen loads are higher since nitrogen is not being removed within the aquifer at the rates previously assumed but rather at much lower

rates and more nitrogen is being transmitted by septic systems and lawns to groundwater. These changes were slightly larger for wastewater than for fertilizer, making the later process more important. Regardless, the findings of this study are generally consistent with recent studies that have found that wastewater is usually the largest source of nitrogen to a given watershed, although fertilizer can sometimes be larger (Kinney and Valiela, 2011; Lloyd, 2014, 2016; Gobler and Stinnette, 2016).

**TASK 3. USE THE DYNAMIC MODEL QUANTIFY HOW CONNECTING DIFFERENT REGIONS OF THE VILLAGE OF WESTHAMPTON BEACH WILL ALTER NITROGEN LOADING RATES TO MONIEBOGUE, QUANTUCK, AND EASTERN MORICHES BAY.**

For task 3, the nitrogen loading model developed for the Village of Westhampton was built to consider the different proposed phases of sewers. This was done in multiple phases (Table 4; Figures 14-15). Phases one through three will involve connecting individual commercial and residential parcels to the sewer treatment plant at Gabreski Airport in phases (Table 4; Figures 14). Phase one focuses on Main Street and a section of residential properties south of Main Street connecting 68 commercial properties and 88 residential properties (Table 4; Figures 14). Phase two focuses on regions north of Main Street and connects 46 commercial properties and 23 residential properties (Table 4; Figures 14). Phase three incorporates 55 commercial properties and 97 residential properties between Montauk Highway and the south edge of Gabreski Airport (Table 4; Figures 14). Phase Four, which will be addressed concurrently with phases 1- 3, will involve an upgrade of on-site septic systems to denitrifying systems recently approved as Article 19 of the Suffolk County Health Code which requires that denitrifying systems reduce nitrogen discharge to at least 19 mg nitrogen per liter. Phase 4 will specifically involve 96 commercial properties and 1,955 residential properties across the Village (Table 4; Figures 15). For phases 1 – 3, wastewater diverted from on-site systems and delivered to the sewer treatment plant at Gabreski Airport was added to the nitrogen loads to the Quantuck Bay watershed assuming a treatment level of 10 mg N per liter.

The first important observation of this task is that the region under consideration for phase 1 sewering falls entirely within the watershed of Moniebogue Bay, meaning that the proposed phase 1 sewer district will benefit this water body but is not expected to have any effect on East Moriches Bay and will add very modestly to the nitrogen loads of Quantuck Bay (2%) (Figures 16, 18). The proposed sewer district for phase 1, however, will have a substantial impact on nitrogen loading to Moniebogue Bay (Figure 17). Beyond the phase 1 sewer district falling entirely within the Moniebogue Bay watershed (Figure 14), it is also important to note that the very large majority of nitrogen entering the waterbody comes from wastewater (72%; Figure 12) and hence the proposed project which will divert a large fraction of this nitrogen load out of the watershed will have a significant impact on loading to regional waterbodies. Quantitatively, the nitrogen load that will be removed from Moniebogue Bay with the implementation of this phase 1 sewer district is 2,167 kg of N per year (~5,000 pounds; Figure 17), representing 22% of the total nitrogen load into Moniebogue Bay (Table 5, Table 13) and 28% of externally sourced nitrogen loads (Table 6, Table 14). Given that the overwhelming majority of nitrogen load to the waterbody is from wastewater, expanding the size of sewer district will further decrease the total nitrogen load to this system.

Phase 2 and 3 are an expansion of the sewer district to a larger area focusing on properties north of the downtown commercial area (Figure 15). Phase 2 would not bring any reduction to Eastern Moriches Bay but phase 3 would bring a reduction of 1,388 kg of nitrogen removed per year to this system (Tables 7 - 10; Figure 16) representing 3 and 4% of total and external nitrogen loads, respectively (Tables 13 and 14). Phase 2 would also have an additional benefit to Moniebogue Bay, removing another ~700 kg of nitrogen per year (Tables 7 and 8; Figure 17), bringing the reduction in nitrogen load to the bay to ~30% of the total load and 37% of the external loads (Tables 13 and 14). In contrast, phase 3 would target few homes within the Moniebogue Bay watershed and this would have only a minor impact on this system (Tables 9 and 10; Figure 17). For Quantuck Bay phase 2 and 3 would have almost not net effect as the nitrogen removed from this watershed is nearly equal to the nitrogen imported from the others via the sewage treatment plant (Tables 7 – 10, 13-14; Figure 18).

Finally, phase 4 of the Village of Westhampton Beach sewage mitigation program would entail upgrading more than 2,000 onsite septic systems to systems that denitrify and remove large amount of nitrogen. This phase targets nearly five-times more systems than phases 1 – 3 combined and thus would remove the largest amounts of nitrogen. Numerically, for Eastern Moriches Bay, this phase would remove 3,876 kg or more than four tons of nitrogen leading to a cumulative reduction of 12% of the total load and 18% of the external load (Tables 11-13; Figure 16). For Moniebogue Bay, this phase would remove an additional 4,121 kg of nitrogen leading to a cumulative reduction of 56% of the total load and 70% of the external load (Tables 11-13; Figure 17). Finally, for Quantuck Bay this phase would remove nearly 2,000 kg of nitrogen leading to a cumulative reduction of 8% of the total load and 13% of the external load (Tables 11-13; Figure 18).

The three waterbodies studied here are interconnected and therefore have a degree of mixing, in this way it is possible to look at the results as one mixed waterbody. In that context, for all three watersheds combined, these projects would amount to reductions of 16 – 23% (Tables 13 and 14), percentages much smaller than the effect on Moniebogue Bay (70% reduction) which is wholly within the Village watershed. These differences arise from the Eastern Moriches watershed and Quantuck watershed each being individually much larger than the entire Village of Westhampton Beach. For example, the phase 4 area is roughly 1,500 acres whereas the Eastern Moriches Bay watershed is 3,950 acres and the Quantuck Bay watershed is 2,370 acres. Again, while the Moniebogue Bay watershed is completely contained within the phase 4 area, only 19% of the Eastern Moriches Bay watershed and 23% of the Quantuck Bay watershed is contained within the phase 4 area (Figure 6). Hence, going forward it will be important for the Village to partner with the Town of Southampton, Suffolk County, and NYSDEC to address larger scale nitrogen loading and wastewater issues as related to these larger water bodies. The extension of the Community Preservation Fund and the inclusion of water quality improvement projects in that

fund in the future should provide millions of dollars to the Town of Southampton to address on-site wastewater loading within coastal watersheds. Suffolk County's Reclaim Our Waters Initiative will seek to reduce nitrogen loading rates to coastal water bodies that are highly impaired. This will specifically be facilitated via NYSDEC's Long Island Nitrogen Action Plan's Subwatersheds study of Suffolk County that will specifically seek to identify regions most in need of septic upgrades. Given the severe water quality impairment in eastern Moriches Bay, Quantuck Bay, and western Shinnecock Bay (Figures 1-9), it seems certain this region will become a high priority for wastewater mitigation in the near term. This study provides the background and justification for this region to be 'shovel ready' for future wastewater mitigation projects.

Given that some of the study areas examined here are large watersheds outside of the Village boundaries, a final way of examining these project is to assess the proportion of the total nitrogen load from the Village to the surrounding water bodies. All combined, there is 21,431 kg of nitrogen per year delivered from land and sea into the water bodies receiving discharge from the Village as its own watershed including internal (bay) and external (land, atmosphere) and roughly 16,500 kg of nitrogen per year when controllable, land-based sources only are considered (i.e. wastewater and fertilizer; Figures 19, 20). When considering these loads only, phase 1 reduces the total nitrogen load the Village is responsible for by 10 - 14% (for total and land-only based loads), whereas phase 2 is a 16 - 21% reduction, phase 3 is a 23 - 30% reduction, and phase 4 leads to a 66 – 70% reduction of the total nitrogen load the Village is responsible for (Figures 19, 20; Table 15). The higher estimates are likely more important for the Village to consider since internal nitrogen sources like benthic flux and atmospheric deposition cannot be easily mitigated or controlled.

A final thought with regard to phase 4 of this project is the precise types of alternative on-site systems that are installed. Article 19 of Suffolk County's Health Code now requires that alternative, denitrifying on-site septic system reduce nitrogen effluent levels to at least 19 mg of nitrogen per liter and this was the level used in the present study to estimate load reductions associated with phase 4 of this project. Importantly, however, some systems reduce nitrogen levels below this threshold. For example, in pilot phase testing in Suffolk County the Hydro-Action system achieved, on average, 12 mg of nitrogen per liter effluent. In addition, the New York State Center for Clean Water Technology at Stony Brook University has created a new design of septic system called Nitrogen Reducing Biofilters that, in pilot phase testing in Massachusetts, has regularly achieved < 10 mg of nitrogen per liter effluent (CCWT, 2016). Hence, the phase 4 estimates used in this study were conservative and based on the realistic information available as of 2017. It is feasible that the amount of nitrogen reduction achieved in the Village of Westhampton Beach by phase 4 could be twice as large as estimated here which could be up to a 90% reduction in the wastewater loading of nitrogen to Moniebogue Bay, for example.

**TASK 4. USE THE DYNAMIC MODEL QUANTIFY HOW BUILDING OUT THE VILLAGE OF WESTHAMPTON BEACH WITH AND WITHOUT CONNECTING DIFFERENT REGIONS OF WESTHAMPTON VILLAGE TO A SEWAGE TREATMENT PLANT WILL ALTER NITROGEN LOADING RATES TO MONIEBOGUE, QUANTUCK, AND EASTERN MORICHES BAY.**

With the implementation of phase 1 of the sewer district, nearly 5,000 lbs of nitrogen will be diverted from Moniebogue Bay annually while completion of phase 4 will divert 10,000 lbs annually. The creation of the sewage district will also allow for an expansion of building within the Village with the newly constructed structures being connected to the sewage treatment plant which will treat the sewage to a 10 mg N per liter standard. Hence, for this task, the Moniebogue Bay watershed nitrogen loading model was run under six scenarios: Current nitrogen loading, nitrogen loading with the addition of 100,000 square feet of commercial space within the Village, nitrogen loading with the implementation of the sewer district (phase 1), nitrogen loading with the addition of 100,000 square feet of commercial space within the Village along with the implementation of the sewer district, nitrogen loading with the implementation of the sewer district and denitrifying septic systems (phase four), and nitrogen loading with the implementation of the sewer district and denitrifying septic systems and 100,000 square feet of commercial space within the Village. It should be noted that this much building is unlikely to occur within the Village in the near future or potentially ever. This level was specifically chosen to represent a large growth scenario to assess how the implementation of the sewer district would affect nitrogen loading future growth in the region.

As shown in Figure 22, if 100,000 square feet of commercial space was added to the Village without the sewer district, this would ***increase*** nitrogen loading rates to Moniebogue Bay by 64 kg of N per year, likely exacerbating environmental degradation of this water body (Figure 21). Alternatively, if the same growth occurred but the new structures were hooked up to the new sewage treatment plant, the net effect on Moniebogue Bay will be a 2,100 kg N per year ***reduction*** in nitrogen loading to this water body (Figure 21). If this project was carried out to phase four with denitrfying septic systems also added, even 100,000 square feet of commercial space would yield a net decrease in nitrogen loading by more than 50% (Figure 21). Hence, while increased building can lead to significant increases in nitrogen loading to coastal water bodies, when such growth occurs in parallel to the implementation of a sewer district, net nitrogen loading can be reduced.

**TASK 5. PROJECT AND DESCRIBE HOW CONNECTING DIFFERENT REGIONS OF THE VILLAGE OF WESTHAMPTON BEACH TO A SEWAGE TREATMENT PLANT WILL IMPROVE WATER QUALITY IN MONIEBOGUE BAY.**

The large and significant reductions in nitrogen loading from the Village of Westhampton Beach into surrounding water bodies will contribute toward a series of significant water quality improvements in the regions. As stated in the introduction, the first marine habitat to receive nitrogen-enriched groundwater from the Village are salt marshes or wetlands. These habitats are critical for the survival of marine life, birds, and even some terrestrial mammals (Turner 1987; Leonard et al. 1999). In addition, they are known to intercept and process land-derived pollutants including excessive nitrogen loading (Valiela et al. 1978; Dame et al. 1992). Finally, recent research has affirmed the key role salt marshes play in protecting coastal communities from storm surge and flooding (Anderson et al. 2013; Jadhav and Chen 2012; Ysebaert et al. 2011). In fact, mapping of the storm surge from Hurricane Sandy or the expected rise in sea level this century suggests that the salt marshes surrounding the Village of Westhampton Beach are playing a critical role in protecting the Village against current and future storms (Figure 2). It is now widely recognized that excessive nitrogen loading degrades and erodes salt marshes (Turner et al. 2009; Deegan et al, 2012) making coastal communities on Long Island more vulnerable to flooding (NYSDEC 2014). Therefore, the currently proposed project that will divert and remove up to 70% of the nitrogen load to Moniebogue Bay will play a key role in stabilizing and restoring the salt marshes in this region and thus protecting the Village from future flooding associated with sea level rise and storm events.

Beyond the shoreline, the release of nitrogen from groundwater into coastal waters has a strong effect on the estuarine ecosystem since nitrogen is considered the limiting element for primary producers (Nixon, 1995). Hence, excessive nitrogen loading from the Village is promoting algal blooms, brown tides, and *Alexandrium* blooms in near-by waters (Figures 3 – 7), and the cascade of events that ensue from these events such as paralytic shellfish poisoning, reduced water clarity, the loss of seagrass, low oxygen levels and the loss of marine life (Figures 3 - 9). Prior research across Long Island and regionally demonstrates that these processes can work in reverse if nitrogen loads are mitigated. For example, in 1980, the Southwest Sewer District was implemented and sewage from a large region of southwest Suffolk County that had flowed into Great South Bay was diverted to the Atlantic Ocean. Following this, nitrogen levels in Great South Bay declined and more than 3,000 acres of seagrass re-grew (NYSDEC, 2009). Similarly, in Mumford Cove, CT, seagrass was lost entirely as population and sewage inputs increased during the 20$^{th}$ century, and the Cove became overgrown with seaweeds (Vaudrey et al., 2010). In 1989, the sewage was diverted from this Cove and the seaweeds vanished and were replaced by seagrasses (Vaudrey et al., 2010). In Northport Harbor, *Alexandrium* blooms had occurred every year from 2008 to 2012, leading to the closure of more than 8,000 acres of shellfish beds due to

contamination with saxitoxin and the threat of paralytic shellfish poisoning (PSP; NYSDEC, 2008-2016). In 2013, the Northport Village sewage treatment plant was upgraded and reduced its daily nitrogen discharge by more than 50%. In the years since that upgrade (2013-2017), there have been no PSP events in Northport Harbor. Finally, in 1994, a plan was devised to reduce nitrogen loading into Long Island Sound by 58.5% over a 20 year period. Reductions began in earnest at the turn of the century and through this century, the size of the 'dead zone' or low oxygen zone within Long Island Sound has progressively shrunk to the point that in 2015, for the first time since records began, there was no dead zone in Long Island South (CT DEEP, 2015).

With the implementation of the sewer district and the upgrading of septic systems in the Village of Westhampton Beach, it is anticipated that similar change will occur in the surrounding water bodies, but primarily within Moniebogue Bay. More specifically, by reducing nitrogen loadings, that water body will become less hospitable for harmful algae such as brown tides and *Alexandrium* (Hattenrath et al., 2010; Gobler and Sunda, 2012). This will lead to improved water clarity and higher oxygen levels and thus will promote the re-colonization of seagrasses. This, in turn, along with lower levels of brown tide, will benefit regional finfish and shellfish populations. This will also increase the diversity of the phytoplankton community in Moniebogue Bay. Brown tides compete with diatoms and green algae for dominance in this region (Gobler et al., 2011) and prior research has shown that nutrient reductions selectively reduce harmful algae biomass more than other phytoplankton in general (Heisler et al., 2008). This change will have whole ecosystem benefits. It is well-known that brown tides are poorly grazed by zooplankton compared to other phytoplankton (Gobler and Sunda, 2012) and during summer, bloom to the exclusion of other phytoplankton. Since zooplankton are the next step in aquatic food webs that ultimately yield fish, under current conditions, blooms of brown tides are inhibiting the productivity of finfish and shellfish populations, especially pelagic fish that feed in the water (Gobler and Sunda, 2012). Hence, as nitrogen reductions begin to alter phytoplankton populations and reduce the prevalence of brown tides and enhance phytoplankton diversity, zooplankton populations should also rebound, a change that will benefit pelagic finfish and benthic shellfish populations.

Other changes wrought by a lowered intensity of algae blooms should include increased water clarity, improved dissolved oxygen levels, and enhanced levels of submerged aquatic vegetation, and these changes are likely to have positive, synergistic effects on each other and fish populations. More than a decade of research in Moniebogue Bay has shown that water clarity is highly correlated with the levels of algal biomass ($p<0.001$) and hence, the 40% reduction in nitrogen loads should translate into a similar reduction in algal biomass. Additional water clarity will allow more light to penetrate to the bottom of Moniebogue Bay which will promote the growth of submerged aquatic vegetation in regions that previously received less light. Such vegetation can benefit to fish populations whose juvenile forms may utilize the vegetation as a nursery habitat. These aquatic plants will also produce oxygen as they photosynthesize, thus enhancing oxygen

levels in Moniebogue Bay. Finally, the reduction in algal biomass from sewering should also benefit the levels of nighttime dissolved oxygen in Moniebogue Bay. Night-time fish kills are becoming more prominent on eastern Long Island. At night, in the absence of photosynthesis, dissolved oxygen levels are controlled by respiration rates which consume oxygen. These respiration rates are proportional to the total amount of algal biomass produced in Moniebogue Bay which can directly respire or can result in bacterial respiration as the carbon from the algal biomass is consumed. In either scenario, reduced algal biomass from sewering will reduce the incidence and likelihood of low dissolved oxygen levels and fish kills at night in Moniebogue Bay and thus will contribute toward a rebuilding of healthy fish stocks in Moniebogue Bay.

Recently, a study performed for the Town of Southampton estimated the effects of removing nitrogen loads on the intensity of brown tide blooms in Quantuck Bay (Figure 22). If that results from that same study were applied to the nitrogen mitigation that would be associated with this project and focused on Moniebogue Bay, it seems likely this system would see a significantly lessening of brown tide intensity. For example, the 56% reduction in total nitrogen loads to Moniebogue Bay associated with completion of phase 4 of the Village of Westhampton sewage mitigation plan might result in a drop of total nitrogen in the Bay of more than 70%, a 50% reduction in brown tide cells densities, and a 40% reduction in total algae (Figure 22). Collectively, these changes would have many of the ecosystem benefits described above.

Finally, there will be a financial benefit of sewering the Village. Recent research at Stony Brook University has determined that waterfront or near-waterfront home values can be strongly effected by water clarity. Hence, the improved water clarity associated with lower intensity algal blooms should financially benefit home owners in the region as well as associated tax revenues. Obviously, other benefits such as fewer fish kills and algal blooms will also likely improve home values as well as the number of visitors to Moniebogue Bay and the Village, occurrences that will have direct and indirect financial benefits for the Village and its residents.

**References**

Anderson, D. M. (1997). Bloom dynamics of toxic *Alexandrium* species in the northeastern US. Limnology and Oceanography, 42(5part2), 1009-1022.

Anderson, M. E., J. McKee Smith, D. B. Bryant, and R. G. W. McComas. 2013. "Laboratory Studies of Wave Attenuation through Artificial and Real Vegetation." United States Army Corps of Engineers. September.

Beck MW, Heck KL, Able KW, Childers DL, Eggleston DB, Gillanders BM, Halpern B, Hays CG, Hoshino K, Minello TJ, Orth RJ, Sheridan PF, Weinstein MR (2001) The identification, conservation, and management of estuarine and marine nurseries for fish and invertebrates. Bioscience 51:633-641

Bowen, J. L., & Valiela, I. (2004). Nitrogen loads to estuaries: Using loading models to assess the effectiveness of management options to restore estuarine water quality. *Estuaries*, *27*(3), 482-500.

Bowen, J. L., Ramstack, J. M., Mazzilli, S., & Valiela, I. (2007). NLOAD: an interactive, web-based modeling tool for nitrogen management in estuaries. *Ecological Applications*, *17*(sp5), S17-S30.

Breitburg D (2002) Effects of hypoxia, and the balance between hypoxia and enrichment, on coastal fishes and fisheries. Estuaries 25:767-781

Bruno JF, Stachowicz JJ, Bertness MD (2003) Inclusion of facilitation into ecological theory. Trends Ecol Evol 18:119-125

Cloern JE (2001) Our evolving conceptual model of the coastal eutrophication problem. Mar Ecol-Prog Ser 210:223-253

Costanza R, dArge R, deGroot R, Farber S, Grasso M, Hannon B, Limburg K, Naeem S, Oneill RV, Paruelo J, Raskin RG, Sutton P, vandenBelt M (1997) The value of the world's ecosystem services and natural capital. Nature 387:253-260

CT DEEP, 2015. Connecticut Department of Energy and the Environmental Projection Annual Water Quality Monitoring of Long Island Sound.

Dame, R, D Childers, E Koepfler 1992. A geohydrologic continuum theory for the spatial and temporal evolution of marsh-estuarine ecosystems. Netherlands Journal of Sea Research 30:63-72

Deegan, L. A., D. S. Johnson, R. S. Warren, B. J. Peterson, J. W. Fleeger, S. Fagherazzi, and W. M. Wollheim. 2012. Coastal eutrophication as a driver of salt marsh loss. *Nature*, *490*(7420), 388-392.

Deegan, Linda A., Jennifer L. Bowen, Deanne Drake, John W. Fleeger, Carl T. Freidrichs, Kari A Galvan, John E. Hobbie, Charles Hopkinson, D. Samuel Johnson, J. Michael Johnson, Lynsey E. LeMay, Erin Miller, Bruce Peterson, Christian Picard, Sallie Sheldon, Michael Sutherland, Joseph Vallino, and Scott Warren. 2007. Susceptibility of Salt Marshes to Nutrient Enrichment and Predator Removal. *Ecological Applications*, 17(5), pp. S42-S63

Diaz, R. J., & Rosenberg, R. (2008). Spreading dead zones and consequences for marine ecosystems. *Science*, *321*(5891), 926-929.

de Jonge V.N., Elliott, M., Orive, E. 2002. Causes, historical development, effects and future challenges of a common environmental problem: eutrophication. Hydrobiologia 475: 1-19

Dennison, W. C. 1993. Assessing water quality with submersed aquatic vegetation. Bioscience 43:86-94

Fraser, H., & Fleming, R. (2001). Environmental benefits of tile drainage literature review. Available at age-web. age. uiuc. edu/classes/age357/html/benefits% 20of% 20tile% 20drainage. pdf (accessed 7 Aug. 2011, verified 1 Oct. 2011). Univ. of Guelph, Guelph, ON, Canada.

Gobler, C.J., Lonsdale, D.J., Boyer, G.L. 2005. A synthesis and review of causes and impact of harmful brown tide blooms caused by the alga, *Aureococcus anophagefferens*. Estuaries 28, 726-749.

Gobler, C., Berry, D., Dyhrman, S., & Wilhelm, S. (2011). Niche of harmful alga Aureococcus anophagefferens revealed through ecogenomics. *Proceedings of the National Academy of Sciences of the USA*, *108*(11), 4352-4357.

Gobler, C. J., & Sunda, W. G. (2012). Ecosystem disruptive algal blooms of the brown tide species, *Aureococcus anophagefferens* and *Aureoumbra lagunensis*. *Harmful Algae*, *14*, 36-45.

Gobler, C. J., (2016). Eastern Bays Project: Nitrogen Loading, Sources and Management Options. Final Report to the NYS Department of State

Hattenrath, T.K., Anderson, D.A., Gobler, C.J., 2010. The influence of nutrients and climate on the dynamics and toxicity of *Alexandrium fundyense* blooms in a New York (USA) estuary. Harmful Algae 9, 402–412.

Heisler J, Glibert PM, Burkholder JM, Anderson DM, Cochlan W, Dennison WC, Dortch Q, Gobler CJ, Heil CA, Humphries E, Lewitus A, Magnien R, Marshall HG, Sellner K, Stockwell DA, Stoecker DK, Suddleson M (2008) Eutrophication and harmful algal blooms: A scientific consensus. Harmful Algae 8:3-13

Jadhav, Ranjit and Quin Chen. 2012. "Field Investigation of Wave Dissipation Over Salt Marsh Vegetation During Tropical Cyclone." Coastal Engineering.

Kinney, E. L., & Valiela, I. (2011). Nitrogen loading to Great South Bay: land use, sources, retention, and transport from land to bay. *Journal of Coastal Research*, *27*(4), 672-686.

Kolker A.S., Steven L. Goobred, J. Kirk Cochran, Sultan Hameed, Fred Mushacke4 and Robert C. Aller1. 2010. Understanding Global Environmental Trends in Local Wetland Settings. Stony Brook University Geology Conference Abstract.

Leonard, GH, PJ Ewanchuk, MD Bertness 1999. How recruitment, intraspecific interactions, and predation control species borders in a tidal estuary. Oecologia 118:492-502

Lloyd, S. 2014. Nitrogen load modeling to forty-three subwatersheds of the Peconic Estuary. Report by the Nature Conservancy

Lloyd, S. 2016. Modeling nitrogen source loads on the north shore of Long Island. Report by the Nature Conservancy

Lotze HK, Lenihan HS, Bourque BJ, Bradbury RH, Cooke RG, Kay MC, Kidwell SM, Kirby MX, Peterson CH, Jackson JBC (2006) Depletion, degradation, and recovery potential of estuaries and coastal seas. Science 312:1806-1809

Möller, I., T. Spencer, J. R. French, D. J. Leggett, and M. Dixon. 1999. Wave transformation over salt marshes: a field and numerical modelling study from North Norfolk, England.

Nixon SW 1995. Coastal Marine Eutrophication - a Definition, Social Causes, and Future Concerns. Ophelia 41:199-219

NYSDEC 2010. New York State Department of Environmental Conservation (NYS DEC). (2010). New York State Section 303(d) List of Impaired Waters Requiring a TMDL/Other Strategy.

NYSDEC 2008-2017. New York State Department of Environmental Conservation (NYS DEC). (2008-2017). Sanitary Conditions of Shellfish Lands, Shinnecock Bay.

NYSDEC 1999. New York State Department of State. (1999). Land Cover. South Shore Estuary Reserve Technical Report Series.

NYSDEC 2014. Nitrogen Pollution and Adverse Impacts on Resilient Tidal Marshlands Technical Briefing Summary. New York State Department of Environmental Conservation

NYSDEC 2009. New York State Department of Environmental Conservation 2009. Seagrass Task Force Final Report.

Peconic Estuary Program (PEP). (2001). Comprehensive Conservation and Management plan.

SCCWRMP (2015) Suffolk County's Comprehensive Water Resources Management Plan. 1,040 pages

Sunda WG, Graneli E, Gobler CJ (2006) Positive feedback and the development and persistence of ecosystem disruptive algal blooms. J Phycol 42:963-974

Turner, RE (ed) 1987. Aquatic animal production and wetland relationships: Insights gleaned following wetland loss or gain., Vol. Croon Helms Ltd., Beckenham, U.K.

Turner, R. E., B. L. Howes, J. M. Teal, C. S. Milan, E. M. Swenson, and D. D. Goehringer-Toner. 2009. Salt marshes and eutrophication: An unsustainable outcome. *Limnology and Oceanography*, *54*(5), 1634.

Valiela, I, JM Teal, S Volkmann, D Shafer, EJ Carpenter 1978. Nutrient and particulate fluxes in a salt marsh ecosystem - Tidal exchanges and inputs by percipitation and groundwater. Limnology and Oceanography 23:798-812

Valiela I, Foreman K, Lamontagne M, Hersh D, Costa J, Peckol P, Demeoandreson B, Davanzo C, Babione M, Sham CH, Brawley J, Lajtha K 1992. Couplings of Watersheds and Coastal Waters - Sources and Consequences of Nutrient Enrichment in Waquoit Bay, Massachusetts. Estuaries 15:443-457

Valiela, I 2006. Global Coastal Change, Vol. Blackwell Publishing, Malden, MA

Valiela, I., Collins, G., Kremer, J., Lajtha, K., Geist, M., Seely, B & Sham, C. H. (1997). Nitrogen loading from coastal watersheds to receiving estuaries: new method and application. *Ecological Applications*, *7*(2), 358-380.

Vaudrey, J. M., J. N. Kremer, B. F Branco, and F. T. Short. 2010. Eelgrass recovery after nutrient enrichment reversal. Aquatic Botany, 93(4), 237-243

Ysebaert, T, Yang, S., Zhang, L., He Q., Bouma, T., Herman P. 2011.Wave Attenuation by Two Contrasting Ecosystem Engineering Salt Marsh Macrophytes in the Intertidal Pioneer Zone. Society of Wetland Scientists 20

**Figure 1.** Nitrogen concentrations in groundwater under and surrounding Westhampton Beach Village.

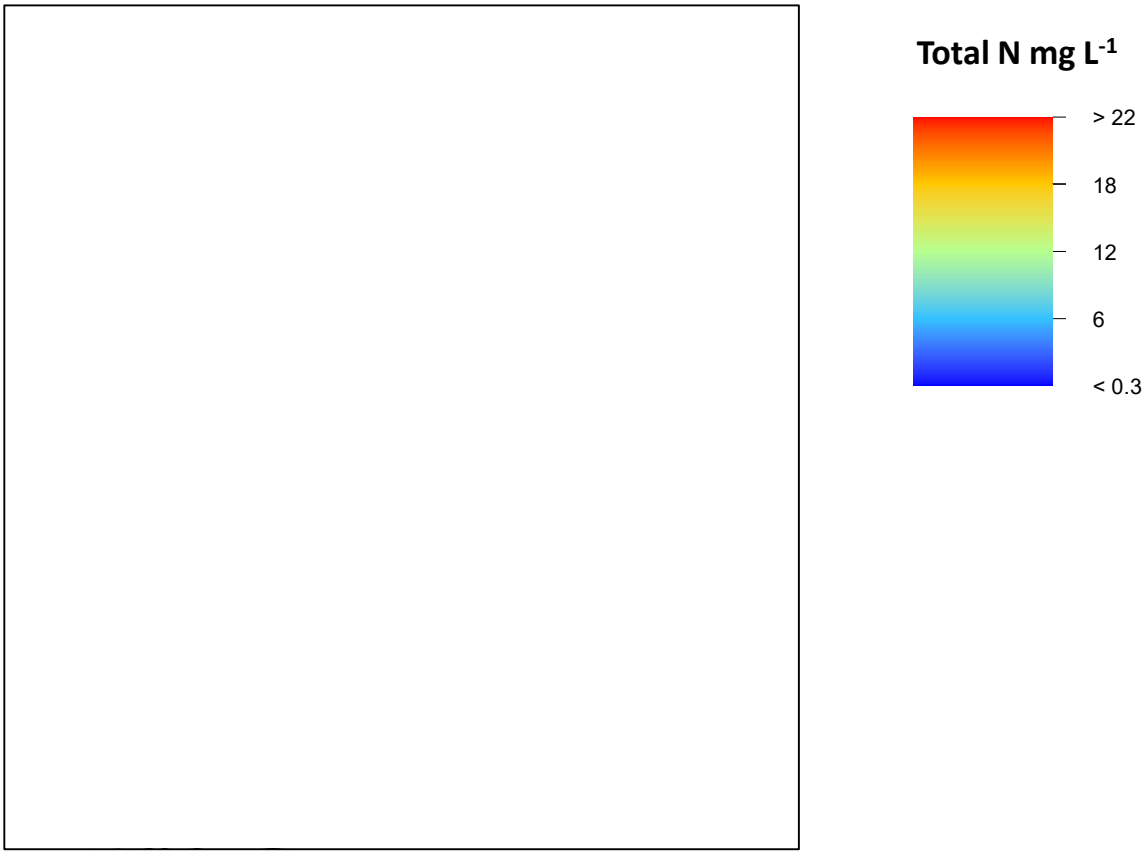

**Figure 2.** Westhampton Beach Village Right: highlighting surrounding salt marshes on Moniebogue Bay. Below left: Flooding that occurred during Hurricane Sandy. Below right: Expected sea level due to sea level rise by the year 2050. The images below highlight the key role salt marshes / tidal wetland play in protecting Westhampton Beach Village from flooding. This protection is at risk from the degradation wrought by excessive nitrogen loading

**Flooding, Hurricane Sandy**

**Sea level by year 2050**

**Figure 3.** Water quality coastal waters within Moriches, Quantuck, and Moriches Bay as measured by Suffolk County Department of Health Services 1976 – 2014 specifically showing (clockwise from the upper right) total nitrogen, brown tide densities, dissolved oxygen levels, secchi disc depth, and chlorophyll *a* levels, a proxy for phytoplankton. The data shows that the waters surrounding Westhampton Beach Village have the lowest quality in this region.

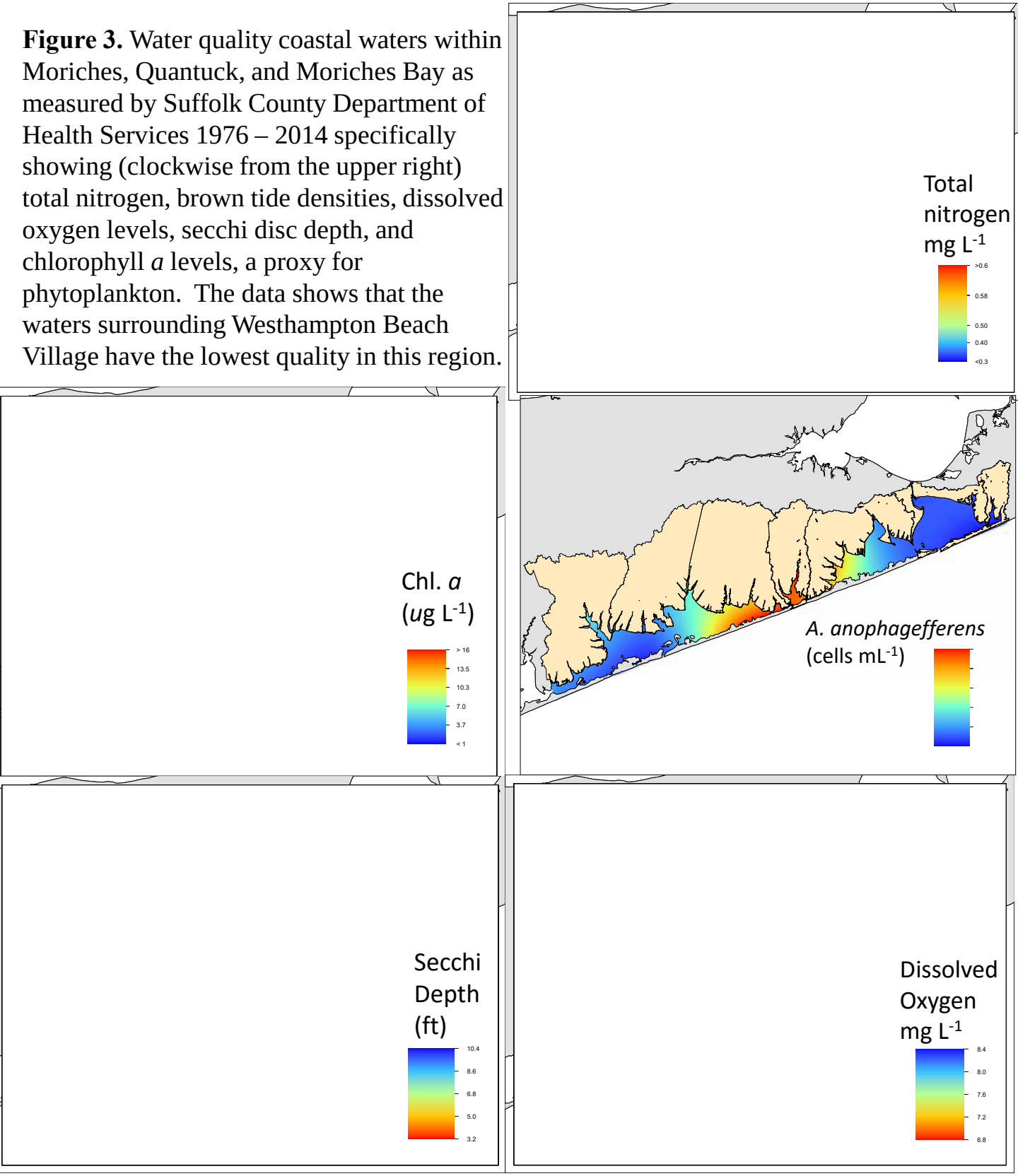

**Figure 4**. Chlorophyll *a* levels across 28 sites around Long Island as measured during the summers of 2014-2016 by the Gobler Lab's water quality reporting to News 12. Moniebogue Bay was the second worst site across all of Long Island.

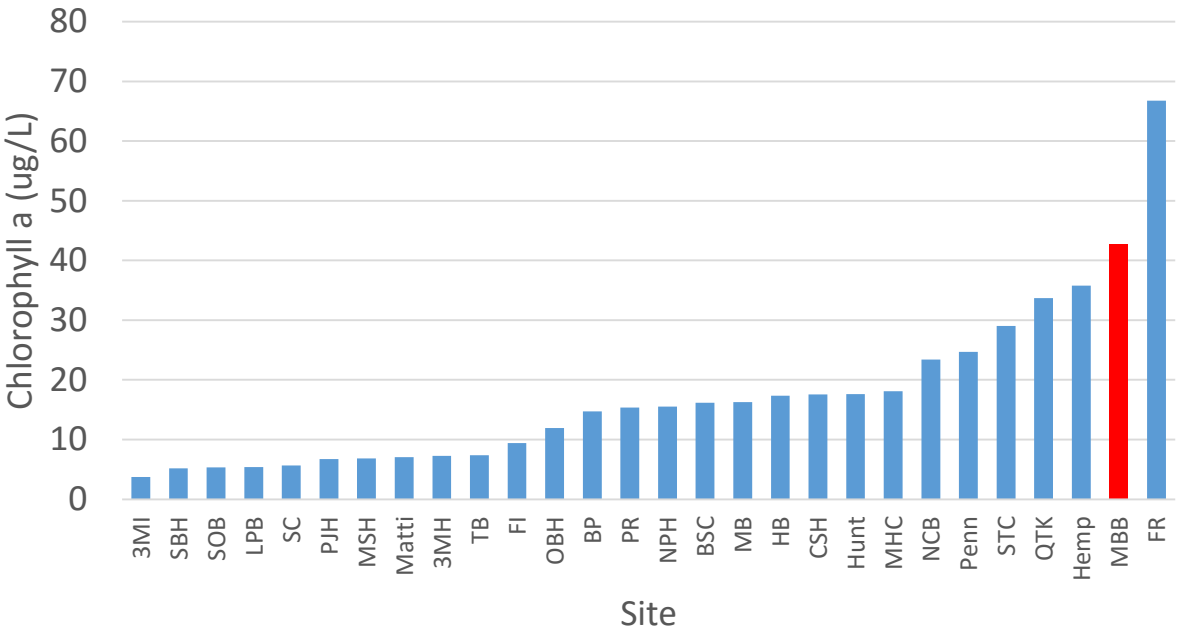

**Figure 5**. Brown tide levels across 28 sites around Long Island as measured during the summers of 2014-2016 by the Gobler Lab's water quality reporting to News 12. Moniebogue Bay was the worst site across all of Long Island.

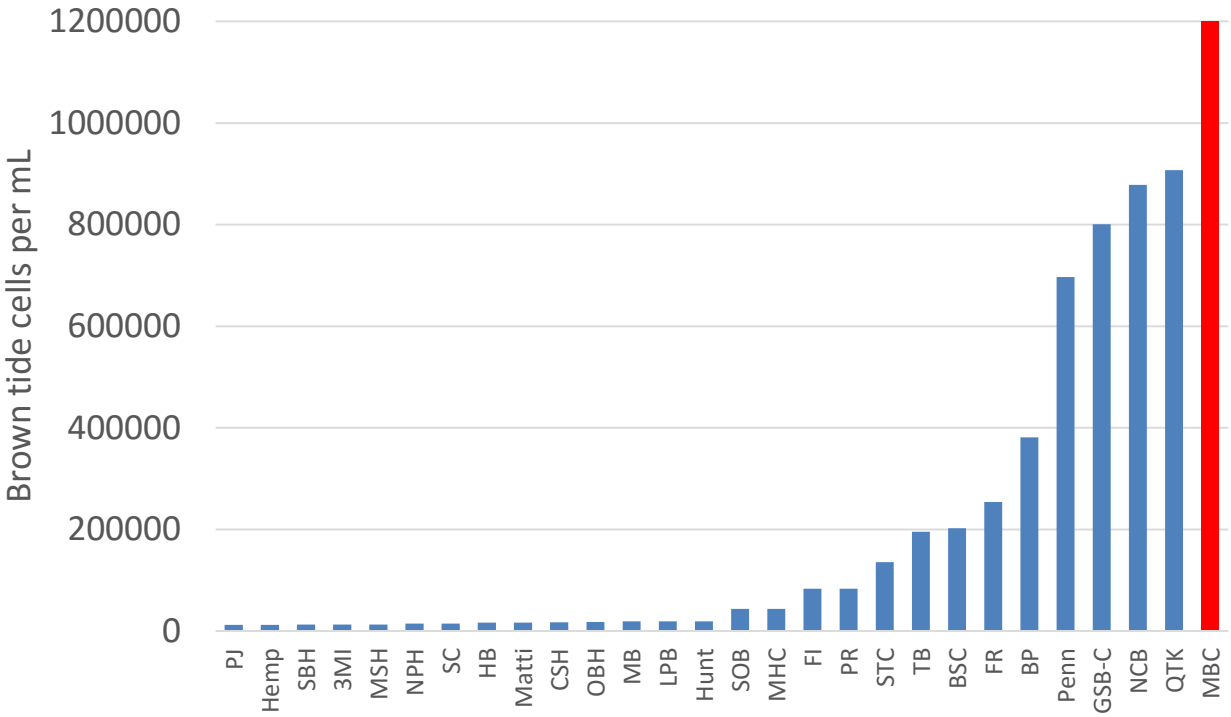

**Figure 6**. Brown tide levels in Quantuck Bay from 1989 through 2016. In the last decade brown tides have gotten more intense and more frequent.

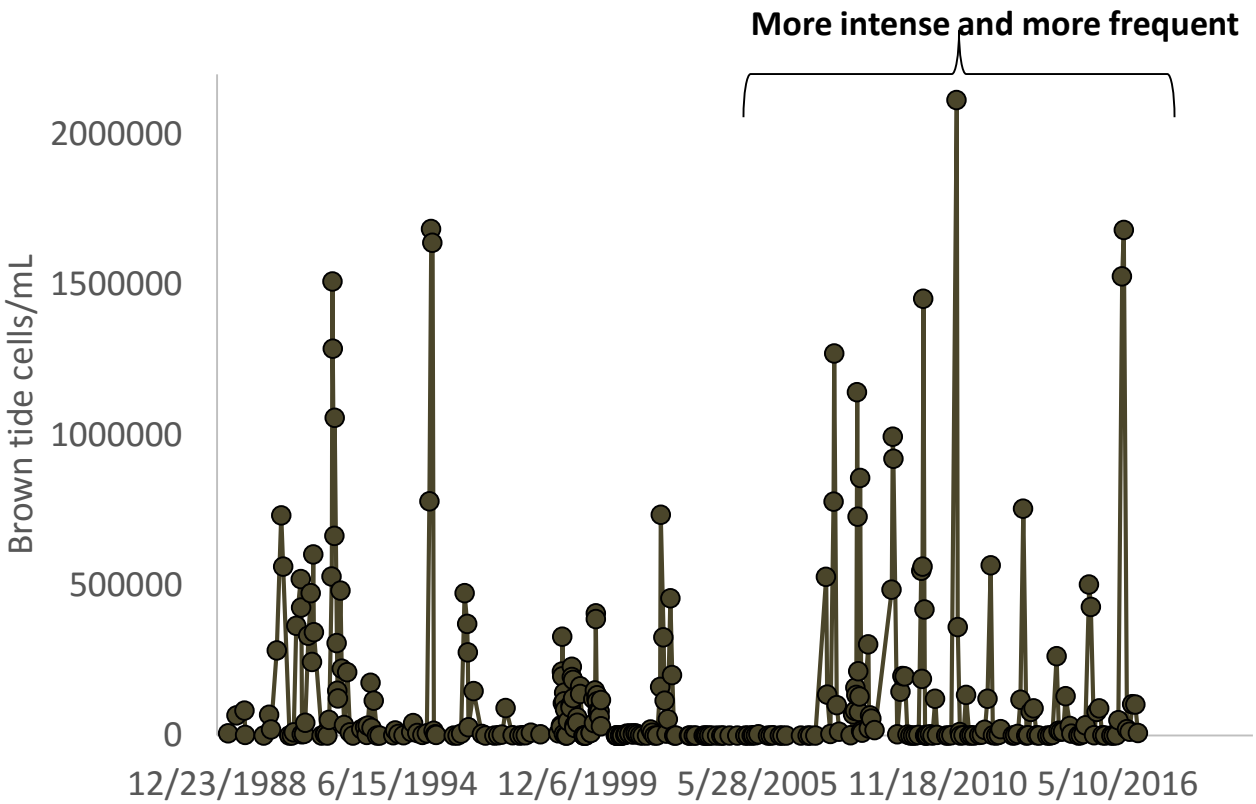

**Figure 7**. Densities of the toxic algae, *Alexandrium*, across Long Island 2007 – 2015, and the 2017 shellfish bed closure in Shinnecock Bay in the region within the Westhampton Beach Village watershed.

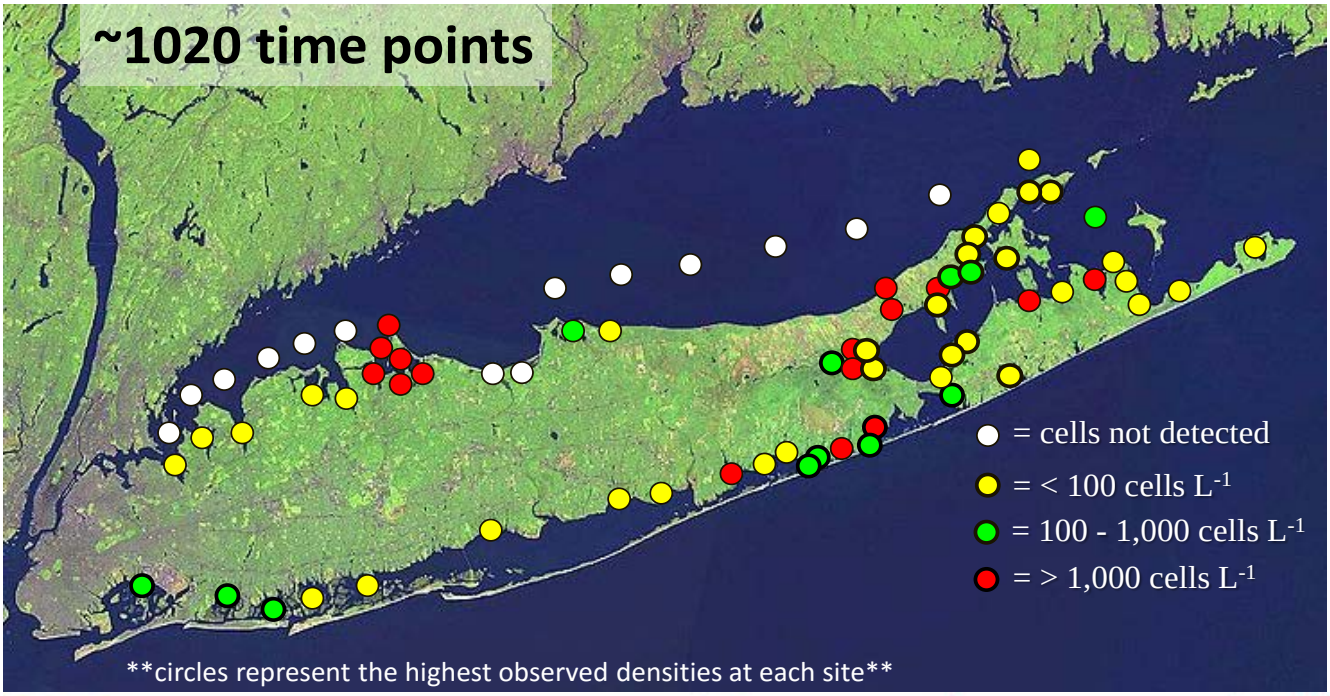


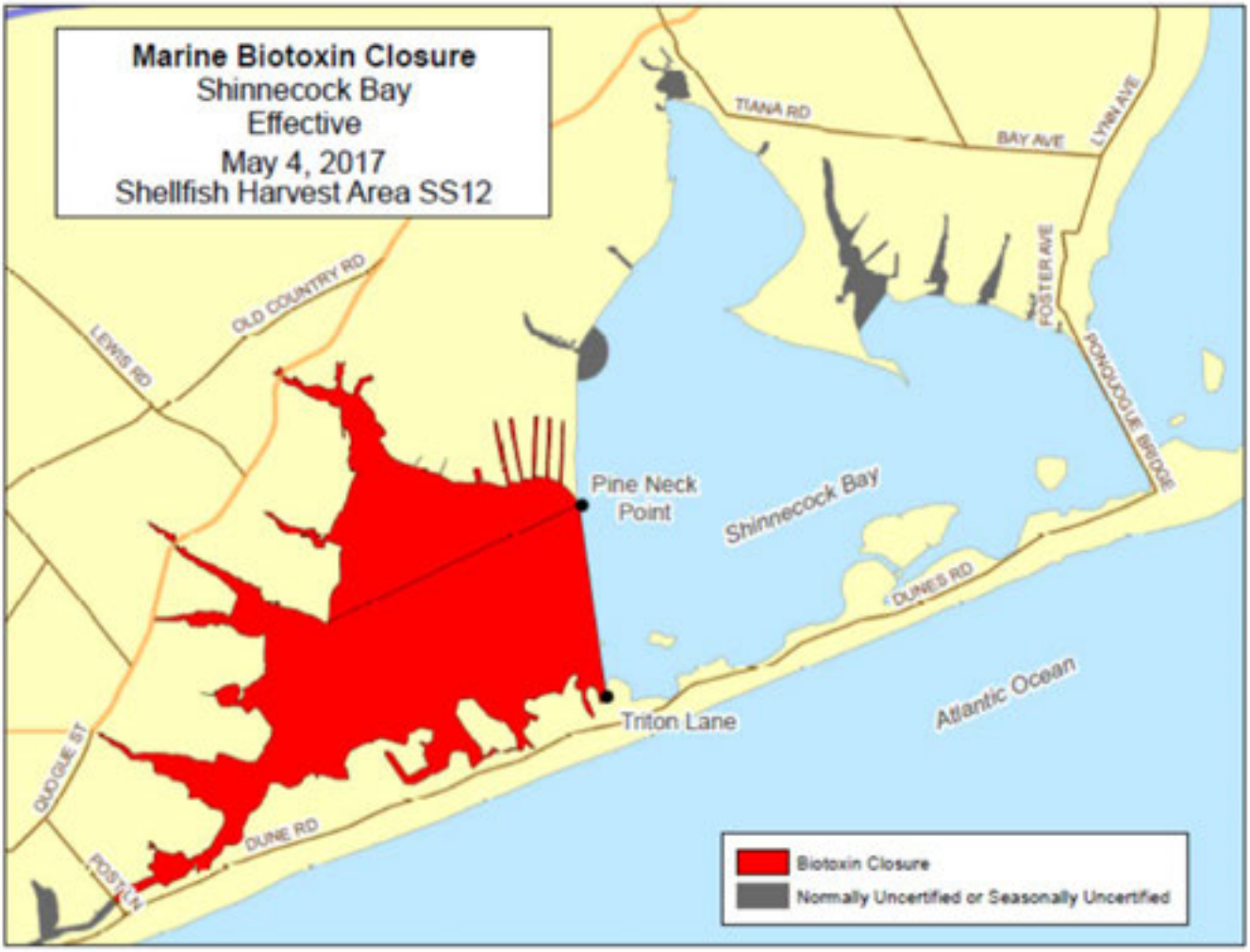

**Figure 8**. Water clarity across 28 sites around Long Island as measured during the summers of 2014-2016 by the Gobler Lab's water quality reporting to News 12. Moniebogue Bay was the worst site across all of Long Island.

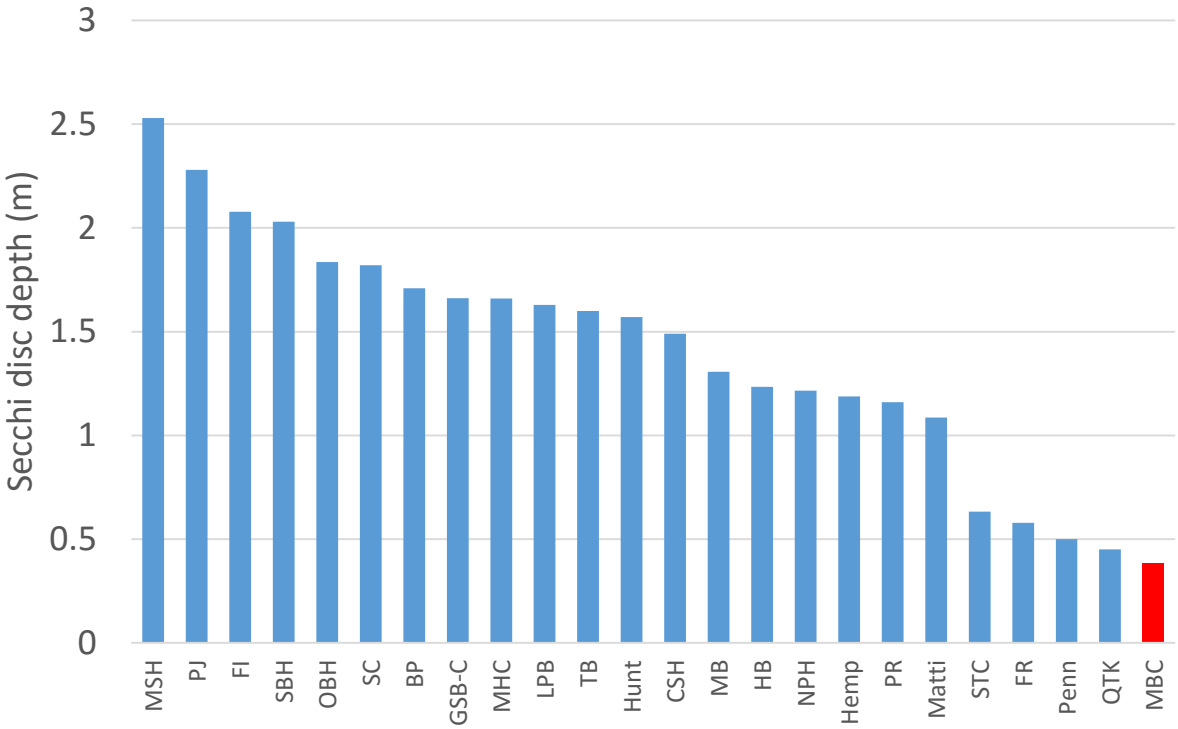

**Figure 9**. Dissolved oxygen levels across sites around Long Island as measured during the summers of 2014-2016 by the Gobler Lab's water quality reporting to News 12. Eastern Moriches Bay was the third worst site across all of Long Island. Rankings of good, fair, and poor follow NYSDEC standards.

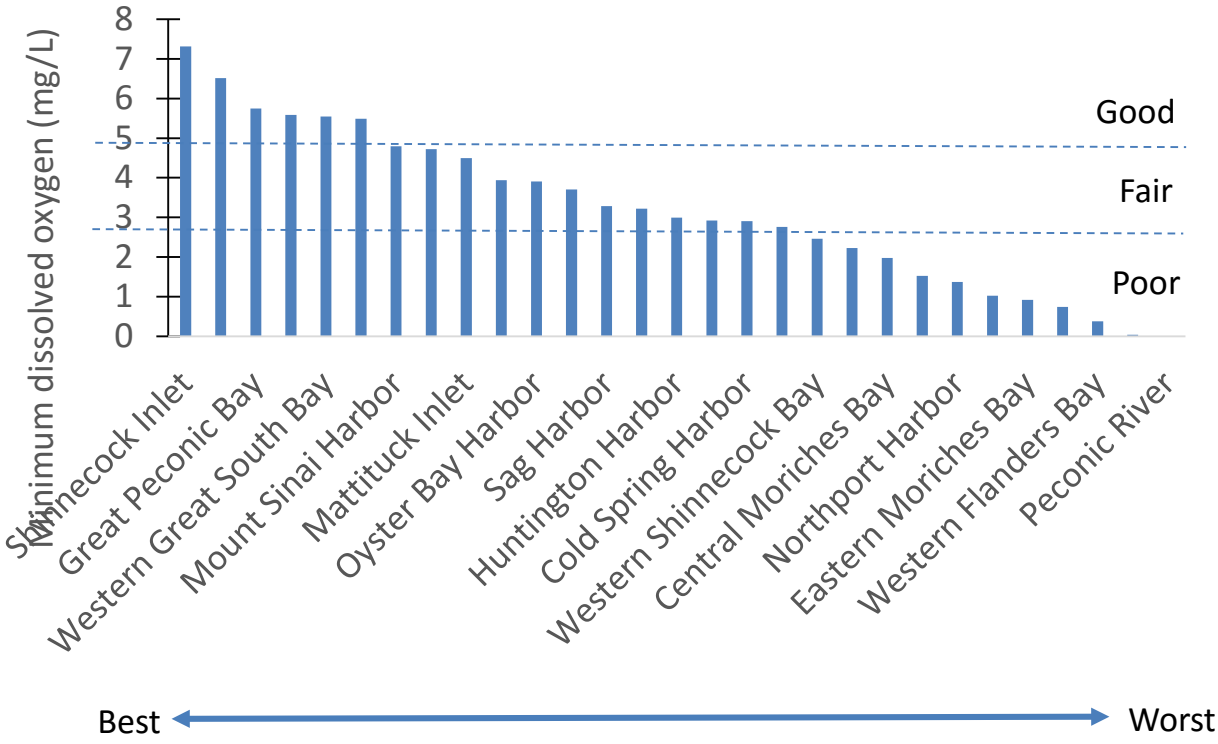


Good, fair, poor based on NYSDEC standards

**Figure 10.** Watersheds for East Moriches, Moniebogue, and Quantuck used in this study.

**Figure 11.** Current relative contribution of various nutrient loading processes to the total nitrogen load to East Moriches.

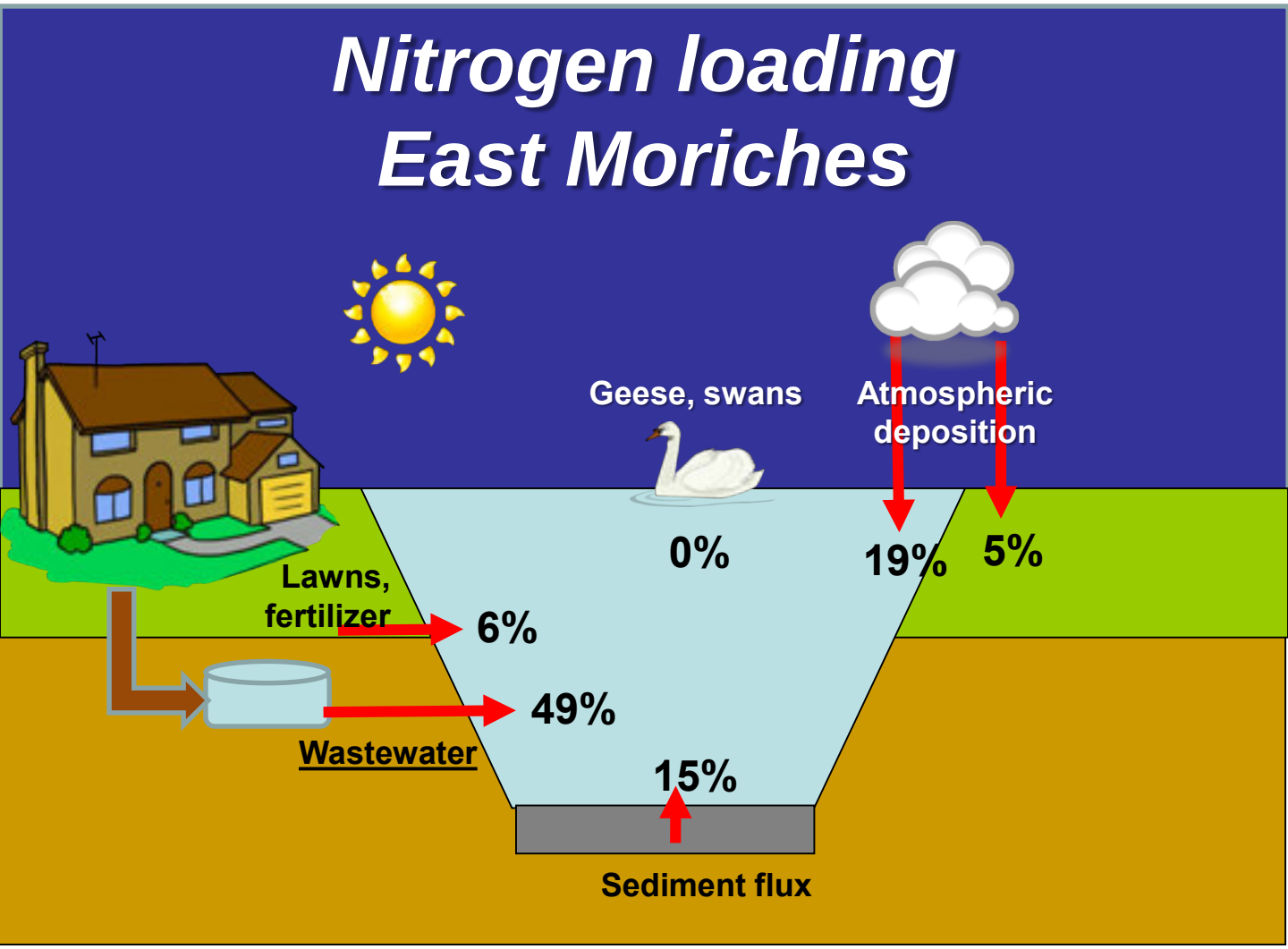


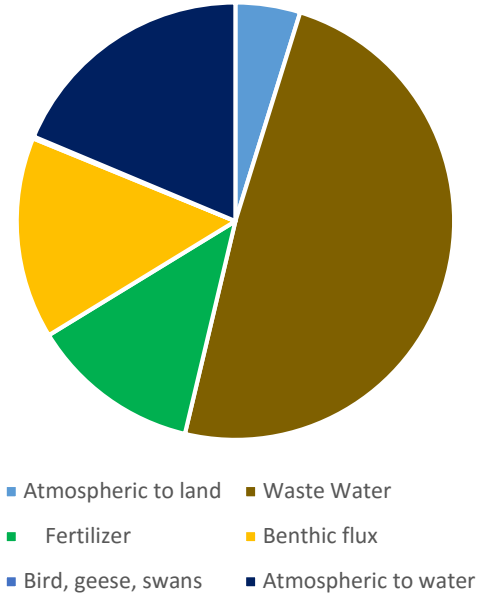

**Figure 12.** Current relative contribution of various nutrient loading processes to the total nitrogen load to Moniebogue bay.

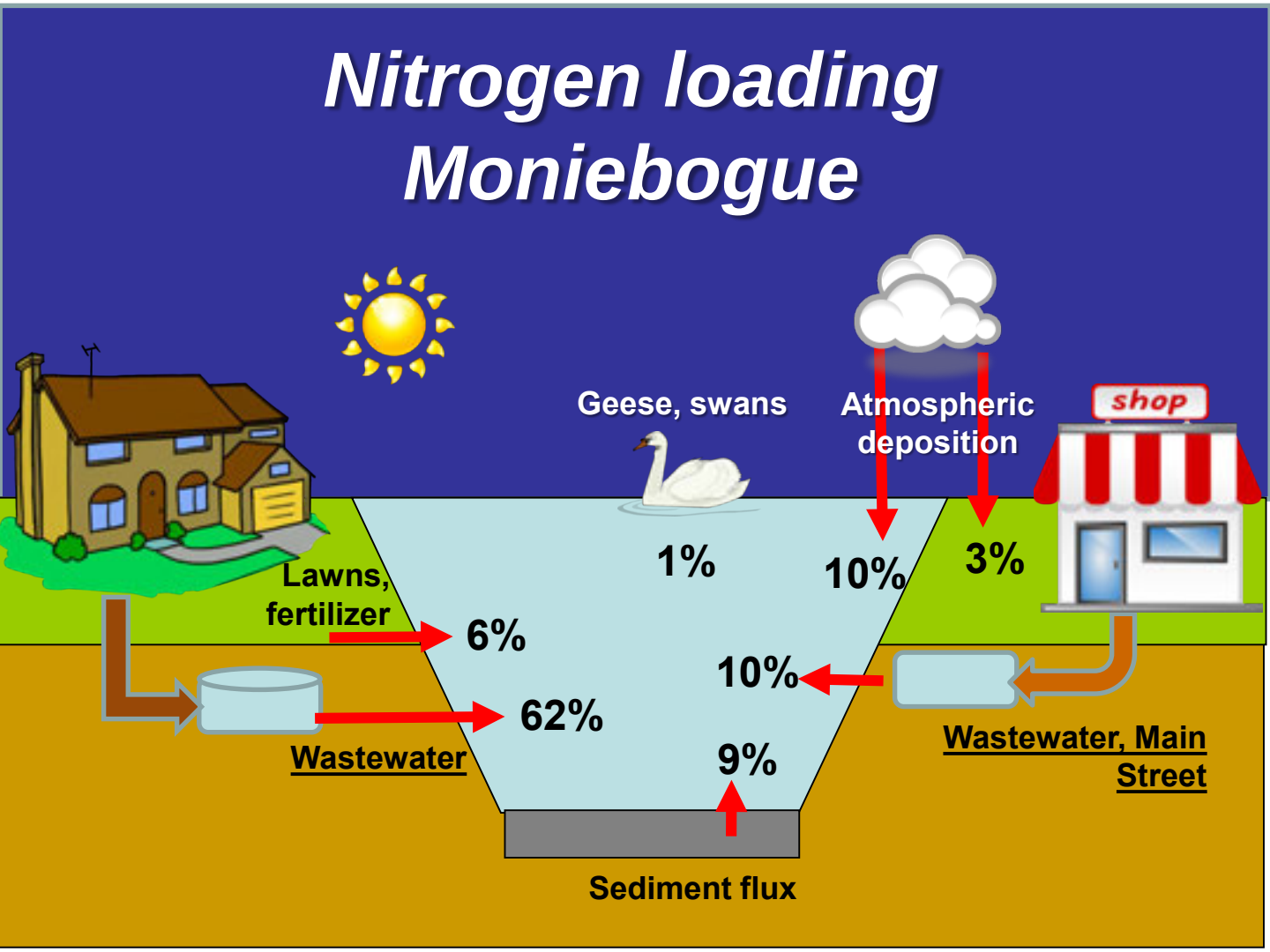


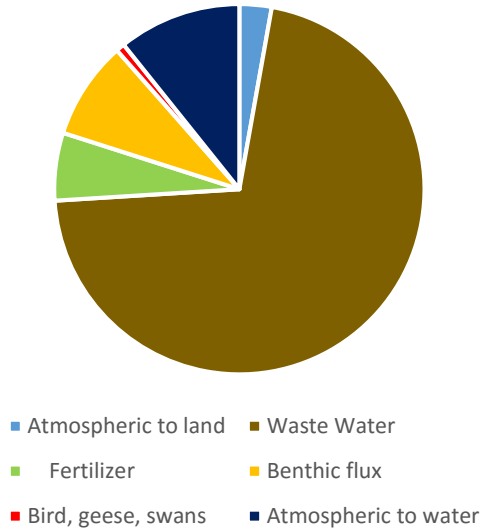

**Figure 13.** Current relative contribution of various nutrient loading processes to the total nitrogen load to Quantuck bay.

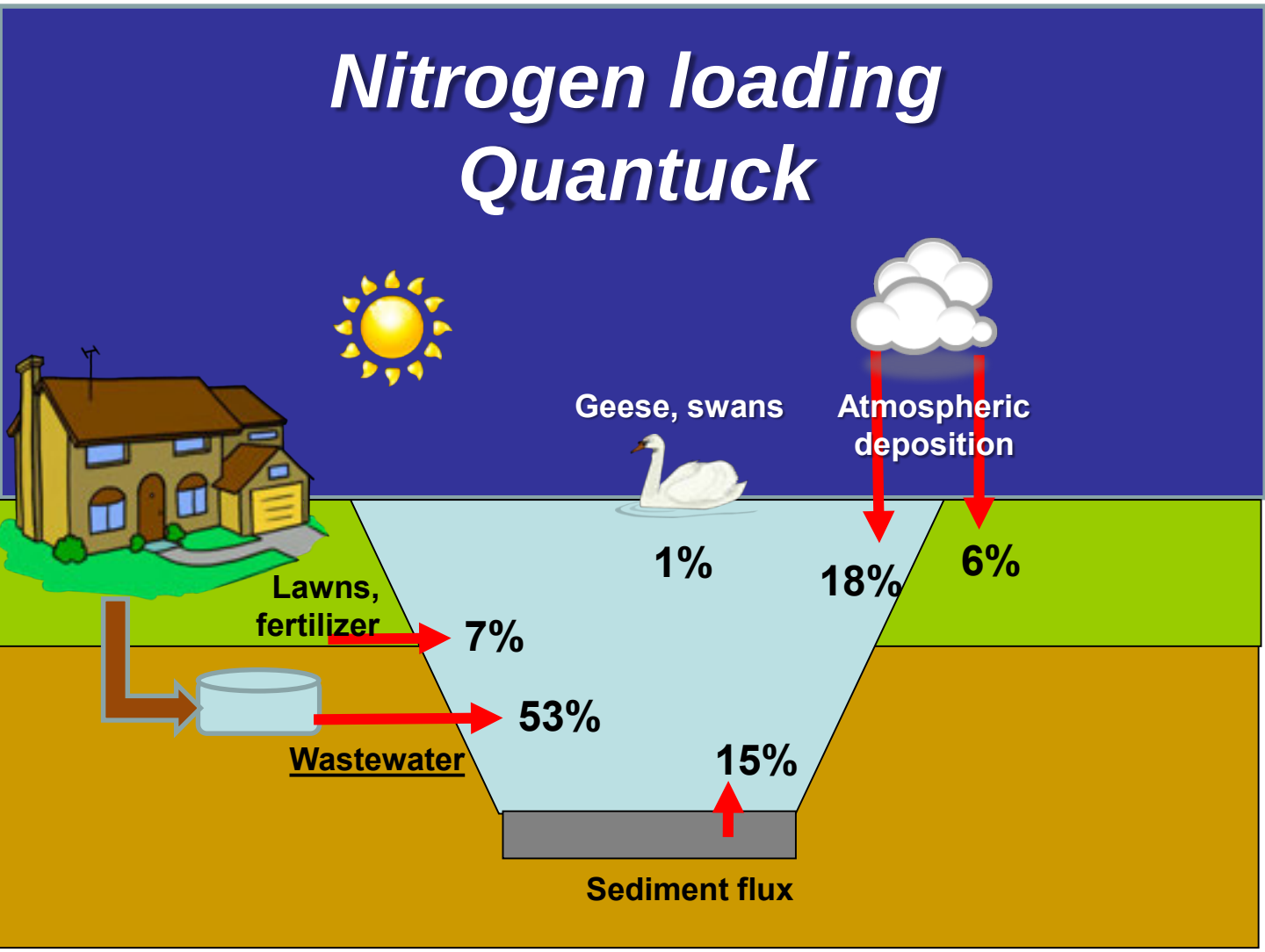


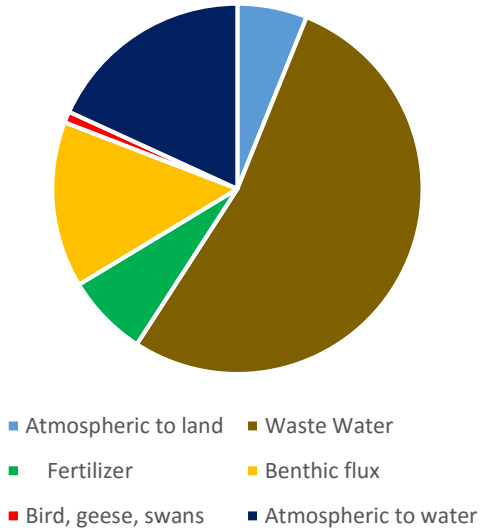

**Figure 14**. Extent of proposed sewer improvement areas for phases 1 – 3.

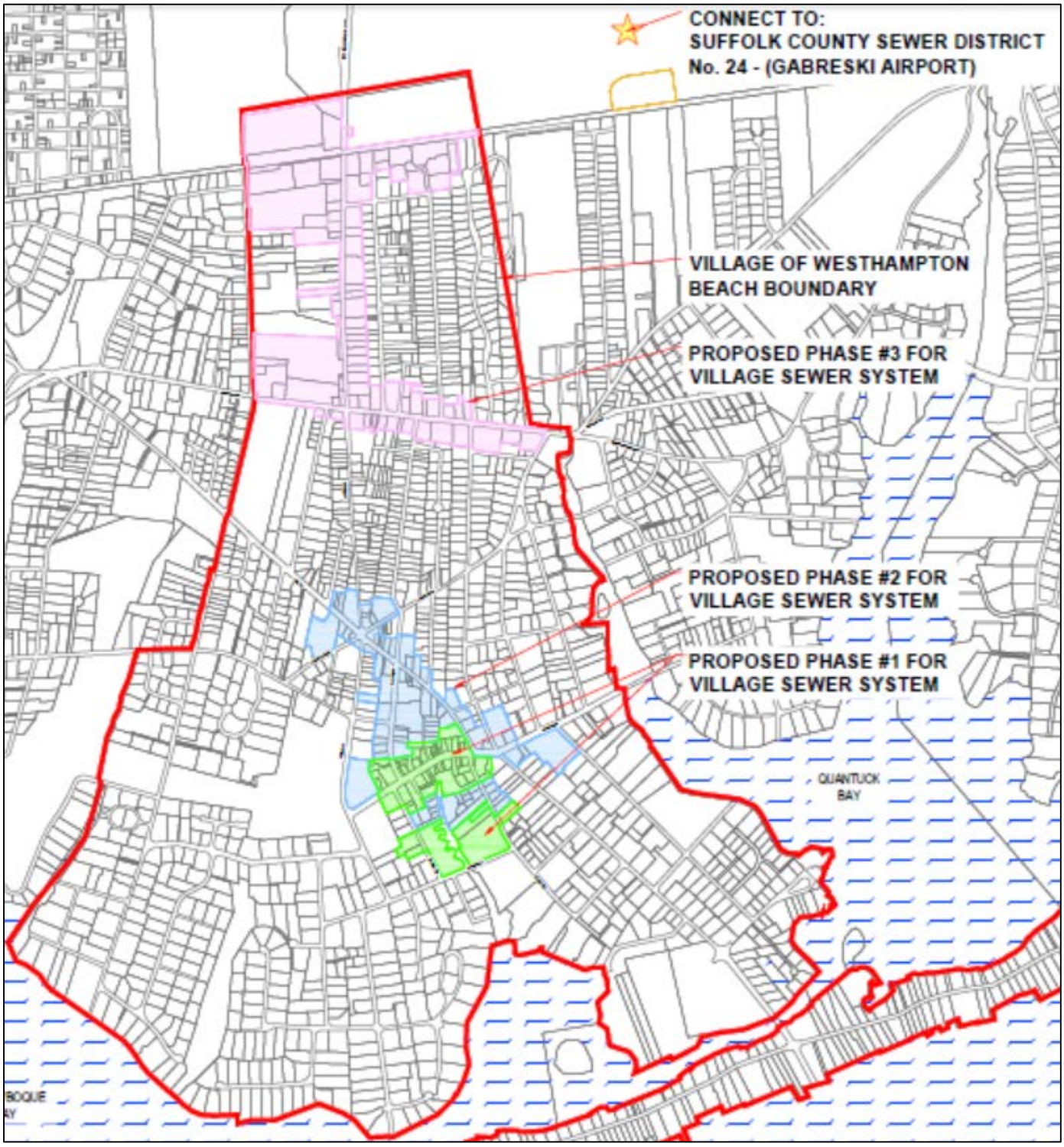

**Figure 15**. Extent of proposed sewer improvement area through phase 4 is outline in orange. The percent of watershed area captured by phase 4 proposal are labeled in the sections of phase 4 boundary.

**Figure 16.** Modeled total nitrogen loads in East Moriches for each proposed phase.

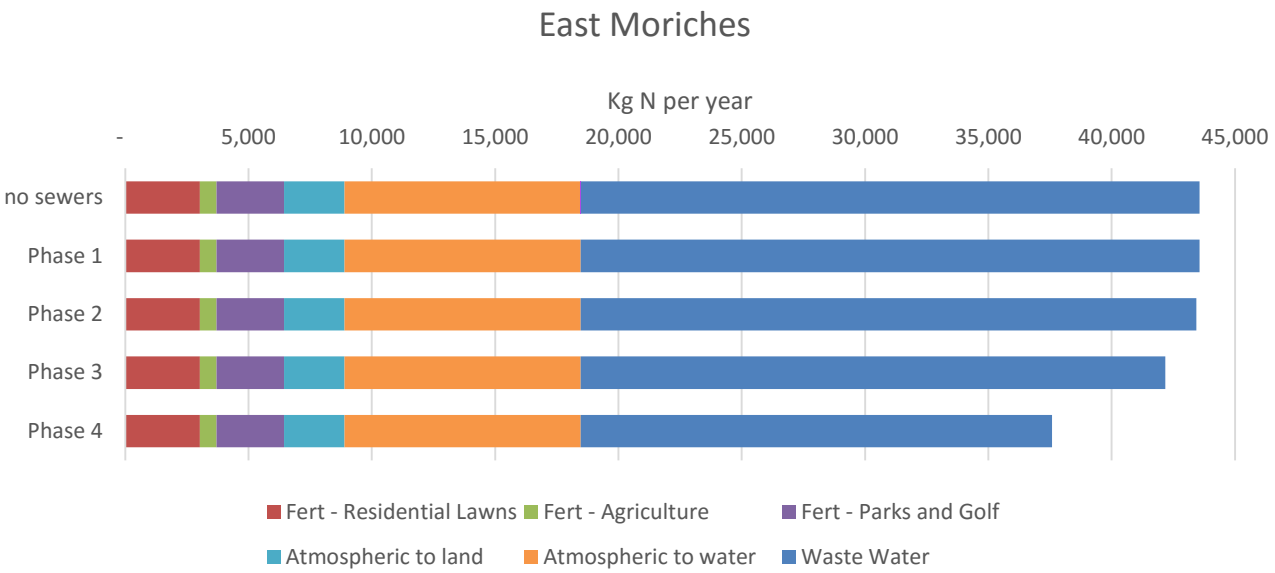

**Figure 17.** Modeled total nitrogen loads in Moniebogue for each proposed phase.

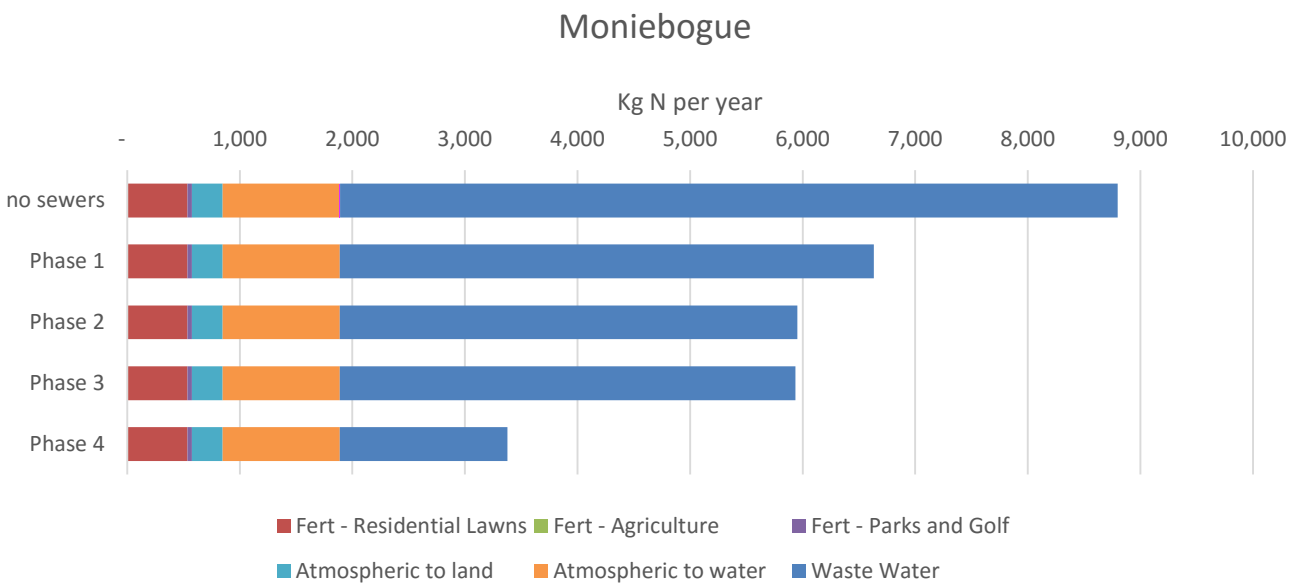

**Figure 18.** Modeled total nitrogen loads in Quantuck for each proposed phase.

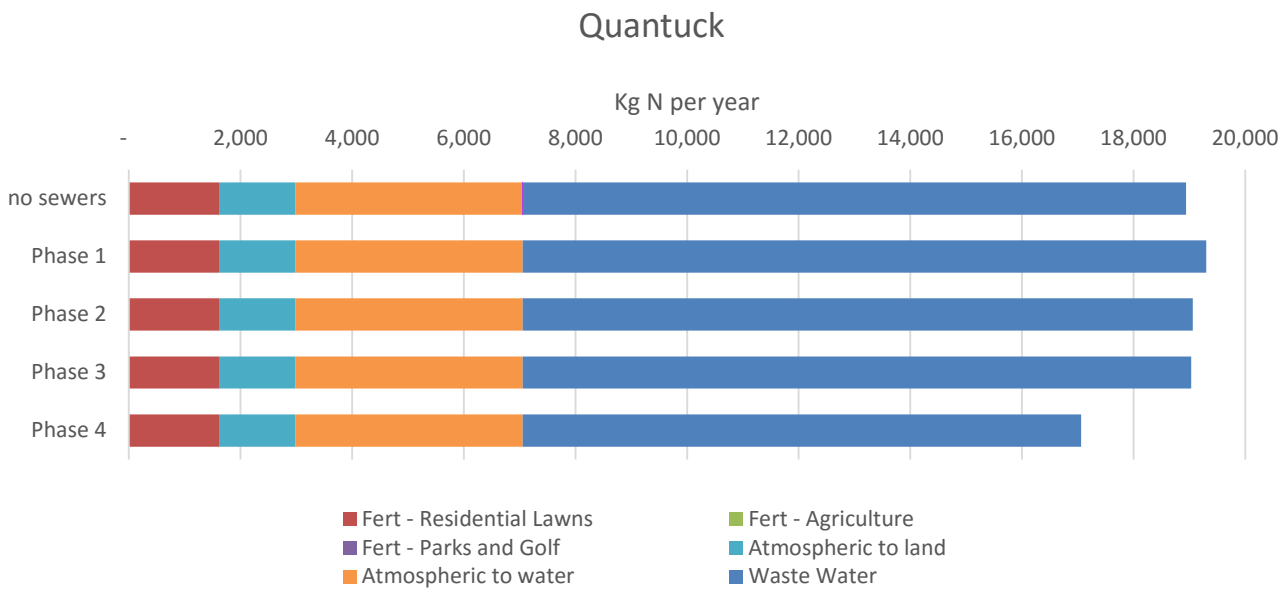

**Figure 19.** The village only contains a small portion of the larger watersheds, this plot scales back the total N load to 21,431 kg per year which is the amount the Village is geographically responsible for. It essentially limits the study area to the village boundaries instead of the watershed boundaries. All sources of nitrogen, external and internal, are included.

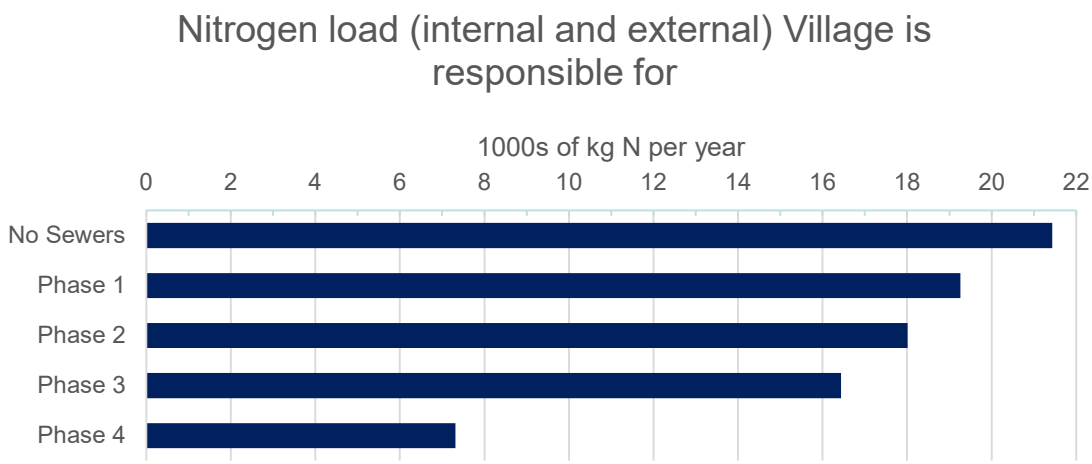

**Figure 20**. Wastewater and fertilizer sourced nitrogen load with the study area limited to the village boundaries instead of the watershed boundaries.

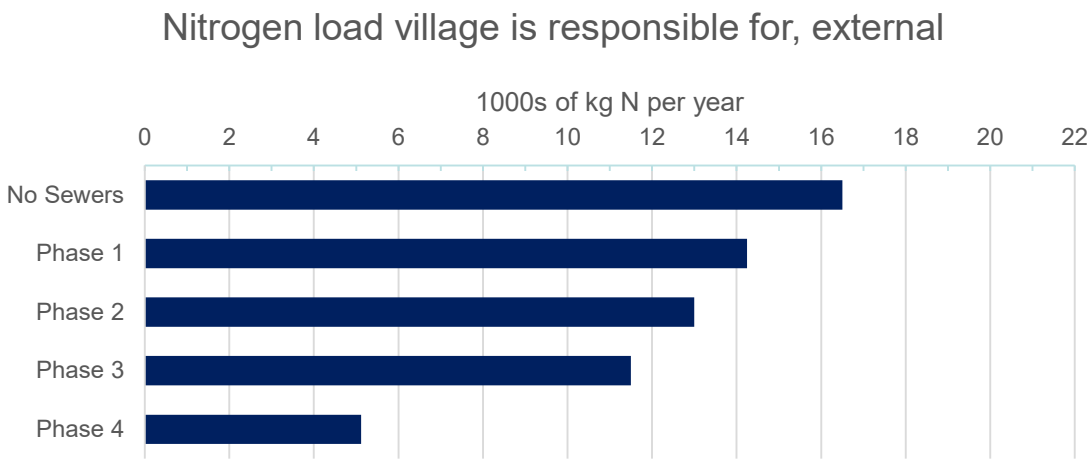

**Figure 21**. Nitrogen loading rates from the Village of Westhampton Beach with and without future growth of 100,000 square feet of space and with and without the implementation of the sewer district (phase 1) and advanced septic systems (phase 4).

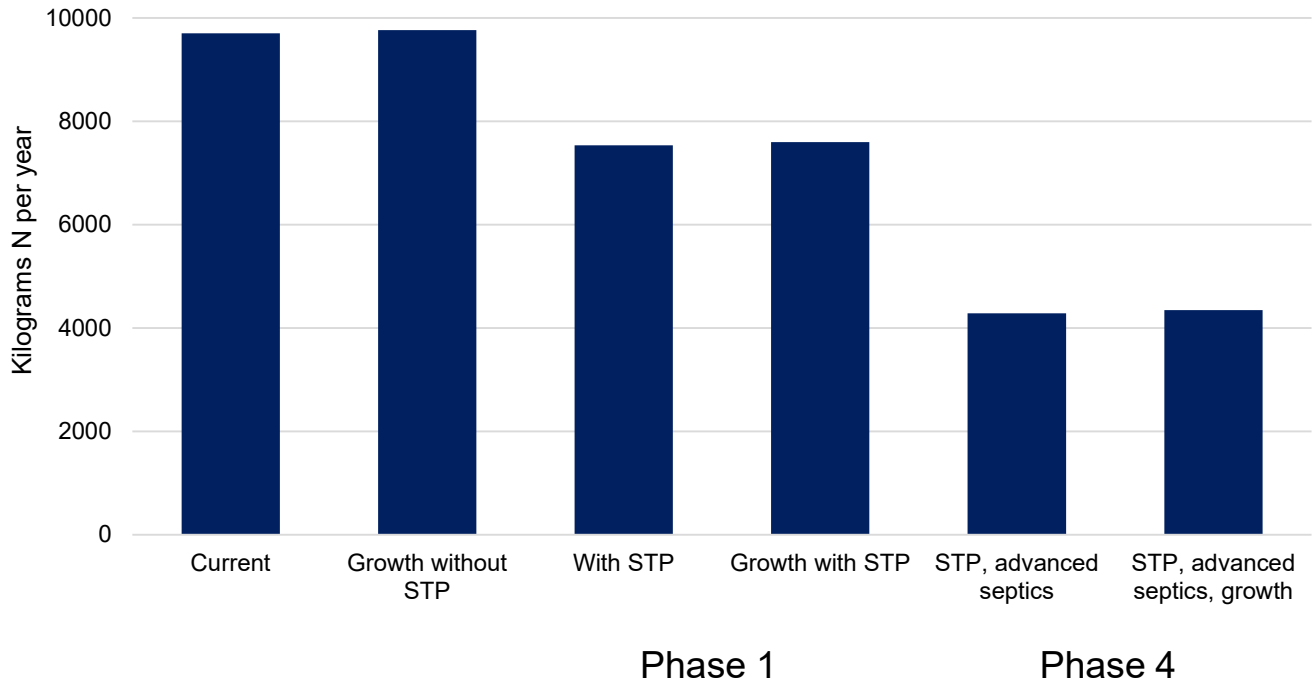

**Figure 22**. Changes in nitrogen levels, brown tide, and chlorophyll levels with differing levels of nitrogen reduction as modeled for Quantuck Bay.

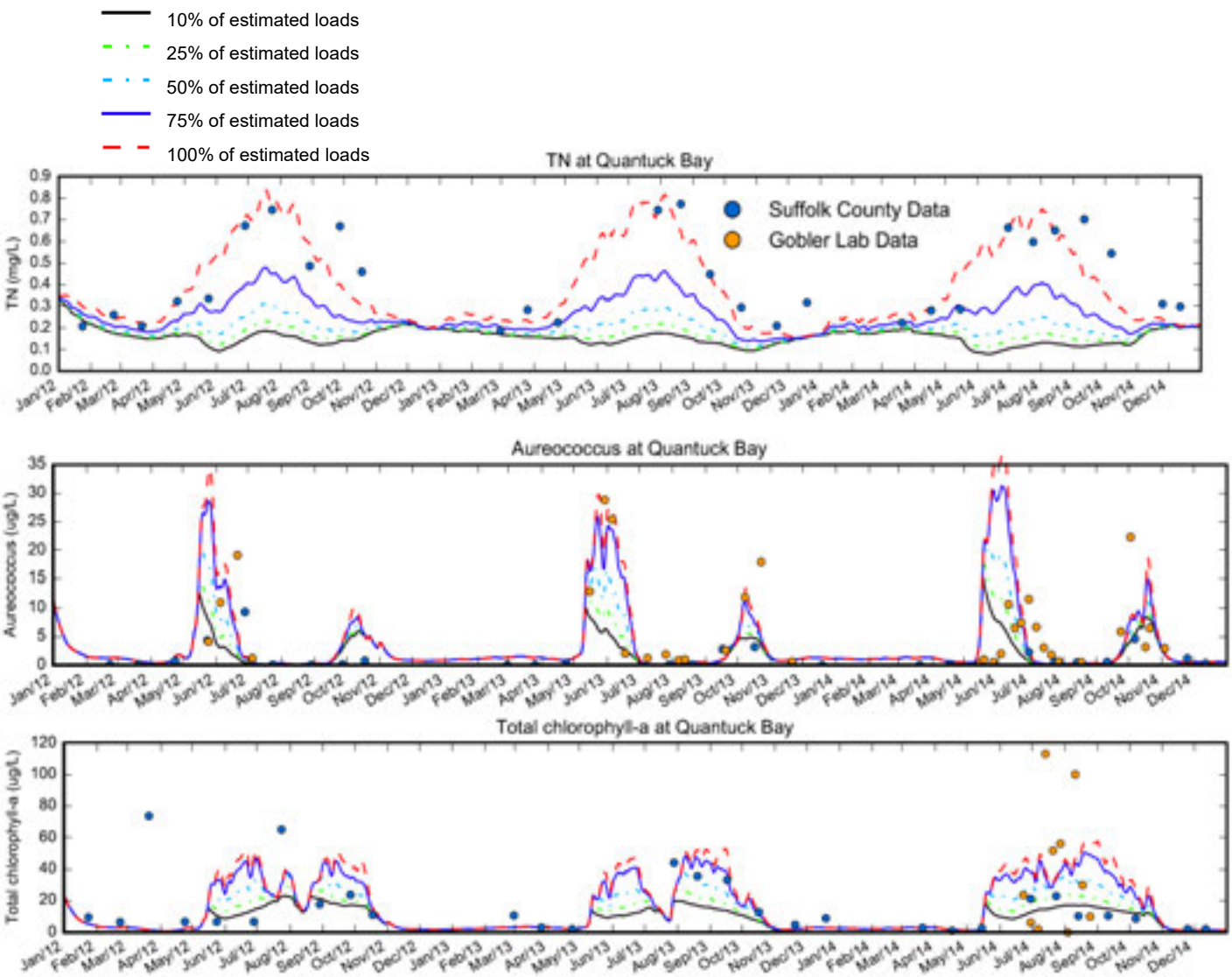

**Table 1.** Inputs used for the nitrogen loading model constructed for this study.

| | E Moriches | Moniebogue | Quantuck | Units | Source |
|---|---|---|---|---|---|
| **Watershed area** | 1598 | 172 | 962 | ha | ArcGIS® |
| **Area of wetlands (freshwater)** | 225 | 0 | 110 | ha | NYS freshwater wetlands maps |
| **Area of agriculture** | 19 | 0 | 0 | ha | Suffolk County Land Use and Land Cover dataset |
| **Area of golf courses** | 41 | 0 | 0 | ha | Open Street Map, Manual Delineation |
| **Area of parks and athletic field lawns** | 23 | 2 | 0 | ha | Suffolk County Land Use and Land Cover dataset |
| **Impervious surfaces total** | 274 | 43 | 192 | ha | Low NDVI created from USGS High Resolution Orthoimagery, open water areas removed. |
| **Area of freshwater ponds** | 10 | 0 | 6 | ha | Suffolk County Land Use and Land Cover dataset |
| **Percent of buildings with cesspools** | 50 | 50 | 50 | % | Southampton GIS department (houses built before 1973 have cesspools) (SB, QB), estimate MB |
| **Area of residential lawns** | 248 | 44 | 133 | | High NDVI (USGS HRO), limited to residential parcels, limited to areas where LiDAR height data was near zero. (USGS LiDAR) |
| **Percent of parcels with fertilized lawns** | 90 | 90 | 90 | % | Suffolk County Recommendations |
| **Total area of roofs** | 63 | 14 | 35 | ha | Suffolk County building footprint dataset, 2006 |
| **Area of Driveways** | 123 | 19 | 132 | Ha | Impervious layer limited to developed parcels |
| **Area of road** | 49 | 11 | 24 | ha | Impervious layer limited to non-taxed parcels |
| **Nitrogen inputs from wet and dry deposition** | 5.37 | 5.37 | 5.37 | kg N $ha^{-1}$ $yr^{-1}$ | Suffolk County Recommendations |
| **Fertilizer applied to golf courses** | 189.9 | 189.9 | 189.9 | kg N $ha^{-1}$ $yr^{-1}$ | Suffolk County Recommendations |
| **Fertilizer applied to parks and athletic fields** | 89.8 | 89.8 | 89.8 | kg N $ha^{-1}$ $yr^{-1}$ | Suffolk County Recommendations |
| **Fertilizer applied to agriculture** | 97.6 | 97.6 | 97.6 | kg N ha-1 yr-1 | Suffolk County Recommendations |
| **Denitrification in the** | 7.5 | 7.5 | 7.5 | % | Suffolk County Recommendations |

**Table 2.** Current annual external nitrogen loading rates from the watershed to East Moriches, Moniebogue, and Quantuck in kilograms of nitrogen per year with percentages of the total nitrogen load represented by each process also shown.

| No Sewers | East Moriches | Moniebogue | Quantuck | East Moriches | Moniebogue | Quantuck |
|---|---|---|---|---|---|---|
| | (kg/yr) | (kg/yr) | (kg/yr) | (%) | (%) | (%) |
| Atmospheric to land | 2,457 | 273 | 1,367 | 7% | 4% | 9% |
| Waste Water | 25,087 | 6,909 | 11,889 | 74% | 89% | 80% |
| Fert - Residential Lawns | 3,027 | 534 | 1,615 | 9% | 7% | 11% |
| Fert - Agriculture | 679 | 0 | 0 | 2% | 0% | 0% |
| Fert - Parks and Golf | 2,733 | 40 | 0 | 8% | 1% | 0% |
| Fertilizer - all | 6,440 | 574 | 1,615 | 19% | 7% | 11% |
| Total | 33,983 | 7,755 | 14,871 | 100% | 100% | 100% |

**Table 3.** Current annual nitrogen loading rates from the watershed to East Moriches, Moniebogue, and Quantuck in kilograms of nitrogen per year with percentages of the total nitrogen load represented by each process also shown.

| No Sewers | East Moriches | Moniebogue | Quantuck | East Moriches | Moniebogue | Quantuck |
|---|---|---|---|---|---|---|
| | (kg/yr) | (kg/yr) | (kg/yr) | (%) | (%) | (%) |
| Atmospheric to land | 2,457 | 273 | 1,367 | 5% | 3% | 6% |
| Waste Water | 25,087 | 6,909 | 11,889 | 49% | 71% | 53% |
| Fert - Residential Lawns | 3,027 | 534 | 1,615 | 6% | 6% | 7% |
| Fert - Agriculture | 679 | 0 | 0 | 1% | 0% | 0% |
| Fert - Parks and Golf | 2,733 | 40 | 0 | 5% | 0% | 0% |
| Fertilizer - all | 6,440 | 574 | 1,615 | 13% | 6% | 7% |
| Benthic flux | 7,647 | 832 | 3,251 | 15% | 9% | 15% |
| Bird, geese, swans | 73 | 73 | 219 | 0% | 1% | 1% |
| Atmospheric to water | 9,578 | 1,043 | 4,072 | 19% | 11% | 18% |
| Total | 51,282 | 9,703 | 22,413 | 100% | 100% | 100% |

**Table 4.** Numbers of commercial and residential properties connected to the sewage treatment or receiving upgraded septic systems under the proposed Village of Westhampton Beach plan.

| | | Commercial | Residential | Total |
|---|---|---|---|---|
| Phase 1 | Sewage treatment plant connections | 68 | 88 | 156 |
| Phase 2 | Sewage treatment plant connections | 46 | 23 | 69 |
| Phase 3 | Sewage treatment plant connections | 55 | 97 | 152 |
| Phase 4 | Alternative onsite systems | 96 | 1,955 | 2,051 |
| Whole project | Sewage treatment plant connections and onsite systems | 264 | 2,164 | 2,428 |

**Table 5.** Phase 1 annual nitrogen loading rates from the watershed to East Moriches, Moniebogue, and Quantuck in kilograms of nitrogen per year with percentages of the total nitrogen load

| Phase 1 | East Moriches (kg/yr) | Moniebogue (kg/yr) | Quantuck (kg/yr) | East Moriches (%) | Moniebogue (%) | Quantuck (%) |
|---|---|---|---|---|---|---|
| Atmospheric to land | 2,457 | 273 | 1,367 | 5% | 4% | 6% |
| Waste Water | 25,087 | 4,742 | 12,250 | 49% | 63% | 54% |
| Fert - Residential Lawns | 3,027 | 534 | 1,615 | 6% | 7% | 7% |
| Fert - Agriculture | 679 | 0 | 0 | 1% | 0% | 0% |
| Fert - Parks and Golf | 2,733 | 40 | 0 | 5% | 1% | 0% |
| Fertilizer - all | 6,440 | 574 | 1,615 | 13% | 8% | 7% |
| Benthic flux | 7,647 | 832 | 3,251 | 15% | 11% | 14% |
| Bird, geese, swans | 73 | 73 | 219 | 0% | 1% | 1% |
| Atmospheric to water | 9,578 | 1,043 | 4,072 | 19% | 14% | 18% |
| Total | 51,282 | 7,537 | 22,774 | 100% | 100% | 100% |

**Table 6 .** Phase 1 annual external nitrogen loading rates from the watershed to East Moriches, Moniebogue, and Quantuck in kilograms of nitrogen per year with percentages of the total nitrogen load represented by each process also shown.

| Phase 1 | East Moriches (kg/yr) | Moniebogue (kg/yr) | Quantuck (kg/yr) | East Moriches (%) | Moniebogue (%) | Quantuck (%) |
|---|---|---|---|---|---|---|
| Atmospheric to land | 2,457 | 273 | 1,367 | 7% | 5% | 9% |
| Waste Water | 25,087 | 4,742 | 12,250 | 74% | 85% | 80% |
| Fert - Residential Lawns | 3,027 | 534 | 1,615 | 9% | 10% | 11% |
| Fert - Agriculture | 679 | 0 | 0 | 2% | 0% | 0% |
| Fert - Parks and Golf | 2,733 | 40 | 0 | 8% | 1% | 0% |
| Fertilizer - all | 6,440 | 574 | 1,615 | 19% | 10% | 11% |
| Total | 33,983 | 5,589 | 15,232 | 100% | 100% | 100% |

**Table 7.** Phase 2 annual nitrogen loading rates from the watershed to East Moriches, Moniebogue, and Quantuck in kilograms of nitrogen per year with percentages of the total nitrogen load represented by each process also shown.

| Phase 2 | East Moriches | Moniebogue | Quantuck | East Moriches | Moniebogue | Quantuck |
|---|---|---|---|---|---|---|
| | (kg/yr) | (kg/yr) | (kg/yr) | (%) | (%) | (%) |
| Atmospheric to land | 2,457 | 273 | 1,367 | 5% | 4% | 6% |
| Waste Water | 24,967 | 4,063 | 11,438 | 49% | 59% | 53% |
| Fert - Residential Lawns | 3,027 | 534 | 1,615 | 6% | 8% | 7% |
| Fert - Agriculture | 679 | 0 | 0 | 1% | 0% | 0% |
| Fert - Parks and Golf | 2,733 | 40 | 0 | 5% | 1% | 0% |
| Fertilizer - all | 6,440 | 574 | 1,615 | 13% | 8% | 7% |
| Benthic flux | 7,647 | 832 | 3,251 | 15% | 12% | 14% |
| Bird, geese, swans | 73 | 73 | 219 | 0% | 1% | 1% |
| Atmospheric to water | 9,578 | 1,043 | 4,072 | 19% | 15% | 18% |
| Total | 51,162 | 6,858 | 21,962 | 100% | 100% | 100% |

**Table 8.** Phase 2 annual external nitrogen loading rates from the watershed to East Moriches, Moniebogue, and Quantuck in kilograms of nitrogen per year with percentages of the total nitrogen load represented by each process also shown.

| Phase 2 | East Moriches | Moniebogue | Quantuck | East Moriches | Moniebogue | Quantuck |
|---|---|---|---|---|---|---|
| | (kg/yr) | (kg/yr) | (kg/yr) | (%) | (%) | (%) |
| Atmospheric to land | 2,457 | 273 | 1,367 | 7% | 6% | 9% |
| Waste Water | 24,967 | 4,063 | 12,007 | 74% | 83% | 80% |
| Fert - Residential Lawns | 3,027 | 534 | 1615 | 9% | 11% | 11% |
| Fert - Agriculture | 679 | 0 | 0 | 2% | 0% | 0% |
| Fert - Parks and Golf | 2,733 | 40 | 0 | 8% | 1% | 0% |
| Fertilizer - all | 6,440 | 574 | 1615 | 19% | 12% | 11% |
| Total | 33,864 | 4,910 | 14,989 | 100% | 100% | 100% |

**Table 9.** Phase 3 annual nitrogen loading rates from the watershed to East Moriches, Moniebogue, and Quantuck in kilograms of nitrogen per year with percentages of the total nitrogen load represented by each process also shown.

| Phase 3 | East Moriches | Moniebogue | Quantuck | East Moriches | Moniebogue | Quantuck |
|---|---|---|---|---|---|---|
| | (kg/yr) | (kg/yr) | (kg/yr) | (%) | (%) | (%) |
| Atmospheric to land | 2,457 | 273 | 1,367 | 5% | 4% | 6% |
| Waste Water | 23,699 | 4,045 | 11,980 | 47% | 59% | 53% |
| Fert - Residential Lawns | 3,027 | 534 | 1,615 | 6% | 8% | 7% |
| Fert - Agriculture | 679 | 0 | 0 | 1% | 0% | 0% |
| Fert - Parks and Golf | 2,733 | 40 | 0 | 5% | 1% | 0% |
| Fertilizer - all | 6,440 | 574 | 1615 | 13% | 8% | 7% |
| Benthic flux | 7,647 | 832 | 3251 | 15% | 12% | 14% |
| Bird, geese, swans | 73 | 73 | 219 | 0% | 1% | 1% |
| Atmospheric to water | 9,578 | 1,043 | 4072 | 19% | 15% | 18% |
| Total | 49,894 | 6,840 | 22,504 | 100% | 100% | 100% |

**Table 10.** Phase 3 annual external nitrogen loading rates from the watershed to East Moriches, Moniebogue, and Quantuck in kilograms of nitrogen per year with percentages of the total nitrogen load represented by each process also shown.

| Phase 3 | East Moriches | Moniebogue | Quantuck | East Moriches | Moniebogue | Quantuck |
|---|---|---|---|---|---|---|
| | (kg/yr) | (kg/yr) | (kg/yr) | (%) | (%) | (%) |
| Atmospheric to land | 2,457 | 273 | 1,367 | 8% | 6% | 9% |
| Waste Water | 23,699 | 4,045 | 11,149 | 73% | 83% | 80% |
| Fert - Residential Lawns | 3,027 | 534 | 1,615 | 9% | 11% | 11% |
| Fert - Agriculture | 679 | 0 | 0 | 2% | 0% | 0% |
| Fert - Parks and Golf | 2,733 | 40 | 0 | 8% | 1% | 0% |
| Fertilizer - all | 6,440 | 574 | 1,615 | 20% | 12% | 11% |
| Total | 32,596 | 4,892 | 14,131 | 100% | 100% | 100% |

**Table 11.** Phase 4 annual nitrogen loading rates from the watershed to East Moriches, Moniebogue, and Quantuck in kilograms of nitrogen per year with percentages of the total nitrogen load represented by each process also shown.

| Phase 4 | East Moriches | Moniebogue | Quantuck | East Moriches | Moniebogue | Quantuck |
|---|---|---|---|---|---|---|
| | (kg/yr) | (kg/yr) | (kg/yr) | (%) | (%) | (%) |
| Atmospheric to land | 2,457 | 273 | 1,367 | 5% | 6% | 7% |
| Waste Water | 19,106 | 1,488 | 10,005 | 42% | 35% | 49% |
| Fert - Residential Lawns | 3,027 | 534 | 1615 | 7% | 12% | 8% |
| Fert - Agriculture | 679 | 0 | 0 | 1% | 0% | 0% |
| Fert - Parks and Golf | 2,733 | 40 | 0 | 6% | 1% | 0% |
| Fertilizer - all | 6,440 | 574 | 1615 | 14% | 13% | 8% |
| Benthic flux | 7,647 | 832 | 3251 | 17% | 19% | 16% |
| Bird, geese, swans | 73 | 73 | 219 | 0% | 2% | 1% |
| Atmospheric to water | 9,578 | 1043 | 4072 | 21% | 24% | 20% |
| Total | 45,301 | 4,283 | 20,528 | 100% | 100% | 100% |

**Table 12.** Phase 4 annual external nitrogen loading rates from the watershed to East Moriches, Moniebogue, and Quantuck in kilograms of nitrogen per year with percentages of the total nitrogen load represented by each process also shown.

| Phase 4 | East Moriches | Moniebogue | Quantuck | East Moriches | Moniebogue | Quantuck |
|---|---|---|---|---|---|---|
| | (kg/yr) | (kg/yr) | (kg/yr) | (%) | (%) | (%) |
| Atmospheric to land | 2,457 | 273 | 1,367 | 9% | 12% | 11% |
| Waste Water | 19,106 | 1,488 | 9,174 | 68% | 64% | 77% |
| Fert - Residential Lawns | 3,027 | 534 | 1,615 | 11% | 23% | 12% |
| Fert - Agriculture | 679 | 0 | 0 | 2% | 0% | 0% |
| Fert - Parks and Golf | 2,733 | 40 | 0 | 10% | 2% | 0% |
| Fertilizer - all | 6,440 | 574 | 1,615 | 23% | 25% | 12% |
| Total | 28,003 | 2,335 | 12,156 | 100% | 100% | 100% |

**Table 13.** Percent reduction of nitrogen load each phase would achieve compared against current nitrogen loads considering internal and external nitrogen loading.

| % reduction of N from phase | East Moriches | Moniebogue | Quantuck | All Combined |
|---|---|---|---|---|
| Phase 1 | 0% | 22% | 0% | 2% |
| Phase 2 | 0% | 29% | 0% | 3% |
| Phase 3 | 3% | 30% | 0% | 5% |
| Phase 4 | 12% | 56% | 8% | 16% |

**Table 14.** Percent reduction of nitrogen load each phase would achieve compared against current nitrogen loads considering external nitrogen loading only.

| % reduction of N from phase | East Moriches | Moniebogue | Quantuck | All Combined |
|---|---|---|---|---|
| Phase 1 | 0% | 28% | 0% | 3% |
| Phase 2 | 0% | 37% | 0% | 5% |
| Phase 3 | 4% | 37% | 0% | 7% |
| Phase 4 | 18% | 70% | 13% | 23% |

**Table 15.** Percent reduction of nitrogen load each phase would achieve. The first column contains all sources of nitrogen load to the waterbody, the second only contains external sources controllable by the Village, wastewater and fertilizer

| | Wastewater, Fertilizer, Atmospheric to land, Atmospheric to water, Benthic, Birds | Wastewater, Fertilizer, Atmospheric to Land |
|---|---|---|
| Phase 1 | 10% | 14% |
| Phase 2 | 16% | 21% |
| Phase 3 | 23% | 30% |
| Phase 4 | 66% | 70% |

# APPENDIX B

Draft Copy of Suffolk County Sanitary Code Article 19

# ARTICLE 19
# MANAGEMENT OF INNOVATIVE AND ALTERNATIVE ONSITE WASTEWATER TREATMENT SYSTEMS

## §760-1901 Declaration of Policy

The designated best use of all groundwater of Suffolk County is for public and private water supply, and of most surface waters for food production, bathing, and recreation. The federal government has officially designated the aquifer below Suffolk County as a sole source for water supply. Therefore, it is hereby declared to be the policy of the County of Suffolk to maintain water resources as near to their natural condition of purity as reasonably possible for the safeguarding of the public health and, to that end, to facilitate the best available onsite wastewater management technologies to minimize and prevent water pollution from residential onsite wastewater treatment systems.

## §760-1902 Statement of Purpose

When properly designed, sited, installed, managed, and maintained, Innovative and Alternative Onsite Wastewater Treatment Systems (I/A OWTS) provide a cost-effective and environmentally sound alternative to sewers in portions of the County that are outside the designated sewer areas. The intent and purpose of this Article is to facilitate development and use of I/A OWTS in Suffolk County as a conservation measure and to authorize the Suffolk County Department of Health Services, as a Responsible Management Entity, to develop and use resources, standards, capabilities and systems to ensure that I/A OWTS are properly managed and maintained, and provide a level of treatment superior to Conventional Septic Systems, which is consistent with the above-stated Declaration of Policy.

## §760-1903 Definitions

A. **Commissioner** means the Commissioner of the Suffolk County Department of Health Services.

B. **Conventional Septic System or Conventional Onsite Wastewater Treatment System (OWTS)** means an onsite sanitary system consisting of a septic tank and any associated interconnecting piping, a leaching structure(s) and any associated interconnecting piping that does not have any active or mechanical means of treatment or any supplemental filtration components.

C. **Department** means the Suffolk County Department of Health Services.

D. **Innovative and Alternative Onsite Wastewater Treatment System(s) (I/A OWTS)** means onsite wastewater treatment technologies that are accepted by the Department as capable of achieving the total nitrogen concentrations that are less than Conventional Onsite Wastewater Treatment Systems.

E. **I/A OWTS Management Program** means comprehensive oversight and activities that address issues critical to I/A OWTS including planning, education, maintenance, residuals

DRAFT

management, training certification, licensing, inspections, monitoring, corrective action and enforcement, recordkeeping, inventorying, reporting, financial assistance, and funding.

F. **Maintenance Provider** means a private entity hired by a Property Owner to provide operation and maintenance and contractual service of an I/A OWTS.

G. **Management Information System** means any computer-based system capable of capturing, storing, analyzing, and displaying specifically referenced information.

H. **Operation and Maintenance (O&M)** means the act of performing tasks specified by the Department and / or the manufacturer of the I/A OWTS including, but not limited to, cleaning, inspection, and adjustment of control settings to ensure proper operation of I/A OWTS and related components.

I. **Operation and Maintenance Contract** means a signed contract between the Property Owner and the Maintenance Provider setting forth all required Operation and Maintenance procedures and monitoring schedules along with effective dates of the contract.

J. **Property Owner(s)** means the owner(s) of the real property upon which such I/A OWTS is installed or proposed for installation.

K. **Registration** means the approval process by which a Property Owner completes and submits routine documentation required by the Department so as to certify his/her/its ownership and use of an I/A OWTS. For the purposes of this Article, Registration shall be deemed the equivalent of a permit as defined in Suffolk County Sanitary Code Article 3, except where Suffolk County Sanitary Code Article 3 is inconsistent with this Article 19.

L. **Responsible Management Entity** means the Department, which shall administer and conduct a comprehensive set of activities and have the legal authority and technical capacity to ensure the long term operation, maintenance, and management of all I/A OWTS.

## §760-1904 Powers and Responsibilities

The Department, as a Responsible Management Entity, shall have the authority and responsibility to administer the following activities to ensure the long term operation, maintenance, and management of all I/A OWTS:

A. The Department shall have the responsibility to administer and conduct the day to day operation of the I/A OWTS Management Program, including all technical and administrative requirements, in order to protect the public health and the environment.

B. The Department shall oversee the installation, maintenance and operation of all I/A OWTS.

C. In addition to any required approval issued under Article 5 and/or 6 of the Suffolk County Sanitary Code, the Department shall require Registration of I/A OWTS pursuant to this Article for installation and operation of all existing and future I/A OWTS.

DRAFT

D. The Department shall receive and maintain information and reports as required by this Article.

E. The Department shall have the authority to promulgate procedures, protocols and standards as necessary for the implementation of this Article, including, but not limited to, those standards referenced herein under Sections 760-1903 and 760-1905 through 760-1907.

F. The Department may inspect I/A OWTS and sample discharges as often as deemed necessary by the Department to determine compliance, upon reasonable notice to the Property Owner.

G. The Department shall enforce this Article.

**§760-1905 I/A OWTS Registration Requirements**

**A.** The Department shall require a registration procedure as a condition of its approval for installation and operation of an I/A OWTS in accordance with this Article and in addition to any applicable requirements in Articles 5 and 6 of the Suffolk County Sanitary Code. Registration shall provide a mechanism for the Department to manage Property Owner compliance with this Article.

B. In order to register an I/A OWTS, the Property Owner shall submit a Registration form provided by the Department, together with any required documentation specified below, as well as any required approvals under Suffolk County Sanitary Code Articles 5 and/or 6, where applicable.

C. Upon satisfactory completion of the Registration process, the Department shall notify the Property Owner in writing whether or not the Registration has been approved.

D. In addition to any applicable approval issued under Articles 5 and/or 6 of the Suffolk County Sanitary Code, the Department shall establish registration requirements including, but not limited to, the following:

1. Property Owner information

2. Current, executed Operation and Maintenance Contract

3. Other requirements as determined by Department standards

E. By completing the Registration process, the Property Owner shall agree to:

1. Provide access to the Commissioner or his authorized representative to inspect and sample the I/A OWTS and its discharges upon reasonable notice for the purpose of determining compliance with this Article.

2. Provide access to the Commissioner or his authorized representative, for inspection of all records required by this Article or the Department, upon reasonable notice to the Property Owner, for the purpose of determining compliance with the Article. Where requested by a Maintenance Provider, the

DRAFT

Property Owner shall execute any documents required for release of required information to the Department.

F. Every Property Owner shall be responsible for compliance with the responsibilities specified in the Registration approval and this Article.

G. Every Property Owner shall register new I/A OWTS prior to construction, upon property transfer to a new Property Owner, and every 36 months after the initial Registration. Every Property Owner shall register all existing I/A OWTS with the Department within one year of the effective date of this Article.

**§760-1906 Operation and Maintenance Requirements**

A. Every Property Owner shall have an active Operation and Maintenance Contract with a company that has a current Liquid Waste License and Endorsement K (Innovative and Alternative Treatment System Service Provider Endorsement) through the Suffolk County Department of Labor, Licensing and Consumer Affairs, pursuant to Suffolk County Code § 563-79.

B. The Property Owner is responsible for implementing all O&M requirements to maintain a properly functioning I/A OWTS.

C. An I/A OWTS shall meet all applicable requirements and standards including, but not limited to, the requirements of this Article and Suffolk County Sanitary Code Articles 5 and 6. In addition, an I/A OWTS shall meet all New York State requirements.

D. A fully executed Operation and Maintenance Contract between Maintenance Provider(s) and Property Owner(s) must be in place prior to receiving final approval from the Department.

E. The Operation and Maintenance Contract shall require the Property Owner to authorize the Maintenance Provider to enter onto the Property Owner's property, when necessary, for periodic inspection, pumping, maintenance, and repair of an I/A OWTS.

F. Maintenance Providers shall notify the Department within 30 days when an Operation and Maintenance Contract is not renewed or is canceled.

G. At a minimum, annual O&M shall be required for all I/A OWTS. O&M shall be conducted in accordance with standards, protocols and procedures established by the Department.

H. Maintenance Providers shall report all O&M and emergency I/A OWTS service to the Department. Maintenance Providers shall maintain said records for inspection by the Commissioner for at least five (5) years after the date of the event or occurrence.

I. Maintenance Providers are responsible for following best management practices as specified in the standards promulgated by the Department.

DRAFT

**§760-1907 Performance Requirements, Parameters, and Frequency of Sampling**

A. The Department shall establish standards setting performance parameters and requirements for the frequency of sampling I/A OWTS.

B. The performance standards shall require I/A OWTS to achieve a greater reduction in total nitrogen (TN), biological oxygen demand (BOD), and total suspended solids (TSS) than that of a Conventional Onsite Wastewater Treatment System, in addition to other applicable standards of the County or State for protection of public health.

C. I/A OWTS must be readily accessible to ensure continued environmental compliance.

D. The Department shall establish technical criteria for experimental, piloting, provisional, and general approval for the use of I/A OWTS technologies in Suffolk County.

E. The Department shall maintain a list of approved I/A OWTS technologies in Suffolk County.

**§760-1908 Reporting and Record Keeping**

A. The Department shall be responsible for maintaining a Management Information System which, at a minimum shall track the approval and registration information, inspection, sampling, and O&M of all approved I/A OWTS.

B. It shall be unlawful for a Maintenance Provider to fail to comply with any reporting or record-keeping requirements in this Article or associated standards.

**§760-1909 Enforcement**

A. The Department, acting as a Responsible Management Entity of I/A OWTS, shall enforce this Article and shall utilize the enforcement procedures established in Article 2 of the Suffolk County Sanitary Code entitled: "The Department of Health Services Administration and Enforcement."

B. In addition to existing penalties and remedies for noncompliance as provided for in the Suffolk County Sanitary Code, after notice and the opportunity for a hearing for a Property Owner under Suffolk County Sanitary Code Article 2, the Commissioner may order the Property Owner to conduct additional sampling, maintenance, inspections, and/or monitoring based on previous inspection and/or performance monitoring results.

**§760-1910 Variances, Waivers and Exemptions**

The Commissioner, in his discretion, and upon recommendation of the Suffolk County Board of Review, may grant or deny a variance or waiver from the specific sections of this Article after an application requesting such relief is made and supporting evidence has been presented to the Suffolk County Board of Review in accordance with the provisions of §760-609 of the Suffolk County Sanitary Code.

DRAFT

**§760-1911 Severability**

It is expressly agreed that if any term or provision of this Suffolk County Sanitary Code Article 19, or the application thereof to any person or circumstance, shall be held invalid or unenforceable to any extent, the remainder of this Article, or the application of such term or provision to persons or circumstances other than those as to which it is held invalid or unenforceable, shall not be affected thereby, and every other term and provision of this Article shall be valid and shall be enforced to the fullest extent permitted by law.

*Adopted ____/___/2016*

DRAFT

# APPENDIX C

Suffolk County Sewer Agency Resolution No. 43-2017

# SUFFOLK COUNTY SEWER AGENCY

## RESOLUTION NO. 43 - 2017

### AUTHORIZING THE CONCEPTUAL CERTIFICATION FOR THE CONNECTION OF THE VILLAGE OF WESTHAMPTON BEACH (SH-1687) TO SUFFOLK COUNTY SEWER DISTRICT NO. 24 – GABRESKI MUNICIPAL

WHEREAS, the Village of Westhampton Beach is an existing business district, located in the Town of Southampton, New York, situated on property identified on the Suffolk County Tax Map as District 0905, Section 011.00, Block 01.00, Lots 001.000 through District 0905, Section 011.00, Block 03.00, Lot 005.000 and District 0905, Section 012.00, Block 03.00, Lots 015.000 through District 0905, Section 011.00, Block 04.00, Lot 052.000, and

WHEREAS, the parcels are not located within the boundaries of Suffolk County Sewer District No. 24 – Gabreski Municipal (the "District"), or within the boundaries of any other municipal sewer district, and

WHEREAS, the Village of Westhampton Beach received a Conceptual Certification from this Agency on July 13, 2015 (Resolution 33-2015) to connect Fifty Thousand gallons per day (50,000 GPD) to the sanitary sewerage facilities of the District and that Conceptual Certification expired on July 13, 2017, and

WHEREAS, the Village of Westhampton Beach has applied for both the time extension of the Conceptual Certification granted in Resolution 33-2015 and the Conceptual Certification to discharge an additional Ten Thousand gallons per day (10,000 GPD) to the sanitary sewerage facilities of the District, bringing the total proposed flow to Sixty Thousand gallons per day (60,000 GPD), and

WHEREAS, for the proposed flow of 60,000 GPD, the District's sewage treatment plant currently has Ten Thousand gallons per day (10,000 GPD) of available capacity and will require modifications to the treatment plant to accept the additional Fifty Thousand Gallons per day (50,000 GPD) of sewage from the Village of Westhampton Beach, and

WHEREAS, the connection of the Village of Westhampton Beach to the District will be financially beneficial to the District, and environmentally beneficial to Suffolk County,

WHEREAS, inasmuch as the SEQRA process for the aforesaid connection has not been completed, this Agency cannot, at this time, approve the said connection, and

WHEREAS, in the interest of good planning, and in order to minimize potential hardship on applicants, it is the policy of this Agency, upon review of an application prior to the completion of the SEQRA process, to give applicants an indication of what method of wastewater disposal this Agency would like to see for a particular project, thereby giving applicants an indication of the action that this Agency might take if it were to pass upon the application at the time of such review, and

WHEREAS, in furtherance of such policy, this Agency is desirous of giving the Village Of Westhampton Beach an indication of the action that this Agency might take regarding the proposed connection if the SEQRA process had been completed and the modifications of the STP completed, has determined the additional capacity may be available this Agency were to pass upon the matter at this time,

NOW, THEREFORE, IT IS

1st RESOLVED, that this Agency hereby grants "Conceptual Certification" to the proposed connection of 60,000 GPD of flow from the Village of Westhampton Beach to SCSD No. 24 – Gabreski Municipal, as aforesaid, and it is further

2nd RESOLVED, that this resolution shall become null and void, and of no further force or effect, without any further action by this Agency or notice to the Village of Westhampton Beach, within two (2) years from the date of the adoption hereof if an application for Formal Approval in form and content satisfactory to the Chairman of this Agency, has not been submitted for consideration.

3rd RESOLVED, that

1. such conceptual certification is not, and is not to be construed as, final approval, which can only be granted by this Agency after the SEQRA process for the proposed connection has been completed;

2. the applicant shall return to this Agency for such final approval;

3. the granting of conceptual certification as set forth herein shall not be binding upon this Agency when final approval is sought; and

4. the granting of conceptual certification does not constitute a position by this Agency, favorable or otherwise, with respect to local land use, zoning and/or subdivision requirements.

(Suffolk County Sewer Agency Meeting August 21, 2017)

# APPENDIX D

SCDPW Approval Correspondence for proposed Gabreski STP Expansion Design

## Nicholas F. Bono

**To:** Madhav Sathe
**Subject:** RE: Village of Westhampton Beach Aqua Aerobic Systems Report.

**From:** Madhav Sathe [mailto:madhavmsathe@yahoo.com]
**Sent:** Friday, August 25, 2017 4:41 PM
**To:** Nicholas F. Bono <NBono@H2M.com>; Chris Weiss <cweiss@h2m.com>
**Cc:** Donovan John (DPW) <john.donovan@suffolkcountyny.gov>
**Subject:** Re: Village of Westhampton Beach Aqua Aerobic Systems Report.

Nick,

I think most of my comments have been addressed by the latest Process Design Report by Aqua Aerobic Systems. As you have mentioned the actual size of the blower and number of blowers can be discussed during the detailed engineering phase permitting the availability of space in the blower room.

Consider that the Report has been approved and go ahead with the preparation of your final draft Map and Plan.

Have a great weekend.

Madhav

# APPENDIX E

Preliminary Engineering Process Design Summary for Gabreski STP Expansion

AQUA-AEROBIC SYSTEMS, INC.
A Metawater Company

# Process Design Report

## WESTHAMPTON BEACH NY

Design# 148881
Option: Preliminary Design,
revised per 2017.08.02 comments

## AquaSBR®

Sequencing Batch Reactor

August 08, 2017
Designed By: Tamera Knapp

6306 N. Alpine Rd Loves Park, IL 61111
(815) 654-2501 www.aqua-aerobic.com

© 2017 Aqua-Aerobic Systems, Inc

## Pre-SBR

- Neutralization is recommended/required ahead of the SBR if the pH is expected to fall outside of 6.5-8.5 for significant durations.

- Coarse solids removal/reduction is recommended prior to the SBR.

- Elevated concentration of Hydrogen Sulfide can be detrimental to both civil and mechanical structures. If anaerobic conditions exist in the collection system, steps should be taken to eliminate Hydrogen Sulfide prior to the treatment system.

## SBR

- The maximum flow, as shown on the design, has been assumed as a hydraulic maximum and does not represent an additional organic load.

- The decanter performance is based upon a free-air discharge following the valve and immediately adjacent to the basin. Actual decanter performance depends upon the complete installation including specific liquid and piping elevations and any associated field piping losses to the final point of discharge. Modification of the high water level, low water level, centerline of discharge, and / or cycle structure may be required to achieve discharge of full batch volume based on actual site installation specifics.

## Aeration

- The aeration system has been designed to provide 1.25 lbs. O2/lb. BOD5 applied and 4.6 lbs. O2/lb. TKN applied at the design average loading conditions.

## Process/Site

- The anticipated effluent total nitrogen requirement is predicated upon an influent waste temperature of 10° C or greater. While lower temperatures may be acceptable for a short-term duration, nitrification and denitrification below 10° C can be unpredictable, requiring special operator attention.

- Sufficient alkalinity is required for nitrification, as approximately 7.1 mg alkalinity (as CaCO3) is required for every mg of NH3-N nitrified. If the raw water alkalinity cannot support this consumption, while maintaining a residual concentration of 50 mg/l, supplemental alkalinity shall be provided (by others).

## Anticipated

- The effluent Total Nitrogen (TN) limit of 10 mg/l is assumed to be comprised of 2 mg/l organic nitrogen, 7 mg/l Nox-N, and 1 mg/l NH3-N.

- The ability to meet the anticipated effluent organic nitrogen concentration is contingent upon the system's ability to hydrolyze the influent organic nitrogen to NH3-N. A certain fraction of the organic nitrogen may be refractory and, therefore, will not be biologically converted.

- In order to meet the required Total Nitrogen limit, strict operator attention will be necessary for process and operational control. It is also required that provisions be made for supplemental carbon source addition in order to facilitate denitrification (by others).

## Equipment

- The basin dimensions reported on the design have been assumed based upon the required volumes and assumed basin geometry. Actual basin geometry may be circular, square, rectangular or sloped with construction materials including concrete, steel or earthen.

- Rectangular or sloped basin construction with length to width ratios greater than 1.5:1 may require alterations in the equipment recommendation.

- The basins are not included and shall be provided by others.

- Influent is assumed to enter the reactor above the waterline, located appropriately to avoid proximity to the decanter, splashing or direct discharge in the immediate vicinity of other equipment.

- If the influent is to be located submerged below the waterline, adequate hydraulic capacity shall be made in the headworks to prevent backflow from one reactor to the other during transition of influent.

- A minimum freeboard of 1.4 ft. is recommended for diffused aeration.

- Aqua-Aerobic Systems, Inc. is familiar with various “Buy American” Acts (i.e. AIS, ARRA, Federal FAR 52.225, EXIM Bank, USAid, PA Steel Products Act, etc.). As the project develops Aqua-Aerobic Systems can work with you to ensure full compliance of our goods with various Buy American provisions if they are applicable/required for the project. When applicable, please provide us with the specifics of the project’s “Buy American” provisions.

- Scope of supply includes freight, installation supervision and start-up services.

# AquaSBR - Sequencing Batch Reactor - Design Summary

**Design#: 148881**

**Project: WESTHAMPTON BEACH NY**

**Option: Preliminary Design, revised per 2017.08.02 comments**

***Designed by Tamera Knapp on Tuesday, August 8, 2017***

AQUA-AEROBIC SYSTEMS, INC.
A Metawater Company

## DESIGN INFLUENT CONDITIONS

**Avg. Design Flow** = 0.15 MGD = 568 m3/day

**Max Design Flow** = 0.15 MGD = 568 m3/day

| DESIGN PARAMETERS | Influent | mg/l | Effluent Required | <= mg/l | Effluent Anticipated | <= mg/l |
|---|---|---|---|---|---|---|
| **Bio/Chem Oxygen Demand:** | BOD5 | 350 | BOD5 | 30 | BOD5 | 30 |
| **Total Suspended Solids:** | TSS | 320 | TSS | 10 | TSS | 10 |
| **Total Kjeldahl Nitrogen:** | TKN | 65 | TKN | 3 | TKN | 3 |
| **Ammonia Nitrogen:** | -- | -- | NH3-N | 1 | NH3-N | 1 |
| **Oxidized Nitrogen:** | -- | -- | NOx-N | 7 | NOx-N | 7 |
| **Total Nitrogen:** | -- | -- | TN | 10 | TN | 10 |
| **Total Inorganic Nitrogen:** | -- | -- | TIN | 8 | TIN | 8 |

## SITE CONDITIONS

| | Maximum | | Minimum | | Design | | Elevation (MSL) |
|---|---|---|---|---|---|---|---|
| **Ambient Air Temperatures:** | 85 F | 29.4 C | 30 F | -1.1 C | 85 F | 29.4 C | 25 ft |
| **Influent Waste Temperatures:** | 68 F | 20.0 C | 50 F | 10.0 C | 50 F | 10.0 C | 7.6 m |

## SBR BASIN DESIGN VALUES

**No./Basin Geometry:** = 2 Rectangular Basin(s)

**Freeboard:** = 1.5 ft = (0.5 m)

**Length of Basin:** = 36.0 ft = (11.0 m)

**Width of Basin:** = 24.0 ft = (7.3 m)

| | Water Depth | | Basin Vol./Basin | |
|---|---|---|---|---|
| **Min** | = 12.5 ft | = (3.8 m) | = 0.081 MG | = (305.3 m³) |
| **Avg** | = 14.8 ft | = (4.5 m) | = 0.096 MG | = (362.1 m³) |
| **Max** | = 14.8 ft | = (4.5 m) | = 0.096 MG | = (362.1 m³) |

| | | |
|---|---|---|
| **Number of Cycles:** | = 5 per Day/Basin (advances cycles beyond MDF) | |
| **Cycle Duration:** | = 4.8 Hours/Cycle | |
| **Food/Mass (F/M) ratio:** | = 0.072 lbs. BOD5/lb. MLSS-Day | |
| **MLSS Concentration:** | = 4500 mg/l @ Min. Water Depth | |
| **Hydraulic Retention Time:** | = 1.275 Days @ Avg. Water Depth (1.075 Days @ LWL) | |
| **Solids Retention Time:** | = 15.0 Days | |
| **Est. Net Sludge Yield:** | = 0.892 lbs. WAS/lb. BOD5 | |
| **Est. Dry Solids Produced:** | = 390.5 lbs. WAS/Day | = (177.1 kg/Day) |
| **Est. Solids Flow Rate:** | = 87 GPM (4682 GAL/Day) | = (17.7 m³/Day) |
| **Decant Flow Rate @ MDF:** | = 750.0 GPM (as avg. from high to low water level) | = (47.3 l/sec) |
| **LWL to CenterLine Discharge:** | = 4.5 ft | = (1.4 m) |
| **Lbs. O2/lb. BOD5** | = 1.50 | |
| **Lbs. O2/lb. TKN** | = 4.60 | |
| **Actual Oxygen Required:** | = 1031 lbs./Day | = (467.6 kg/Day) |
| **Air Flowrate/Basin:** | = 402 SCFM | = (11.4 Sm3/min) |
| **Max. Discharge Pressure:** | = 8.0 PSIG | = (55 KPA) |
| **Avg. Power Required:** | = 222.4 KW-Hrs/Day | |

## DESIGN INFLUENT CONDITIONS

**Avg. Design Flow** = 0.15 MGD = 567.8 m³/day

**Max Design Flow** = 0.15 MGD = 567.8 m³/day

| | | Conc. mg/l | Mass lb/day | kg/day |
|---|---|---|---|---|
| **Bio/Chemical Oxygen Demand:** | BOD5 | 350 | 437.9 | 198.6 |
| **Total Suspended Solids:** | TSS | 320 | 400.3 | 181.6 |
| **Total Kjeldahl Nitrogen:** | TKN | 65 | 81.3 | 36.9 |

## SITE CONDITIONS

| | Maximum | | Minimum | | Design | |
|---|---|---|---|---|---|---|
| **Ambient Air Temperatures:** | 85 F | 29.4 C | 30 F | -1.1 C | 85 F | 29.4 C |
| **Influent Waste Temperatures:** | 68 F | 20.0 C | 50 F | 10.0 C | 50 F | 10.0 C |
| **Elevation (Mean Sea Level):** | 25 ft | 8 m | | | | |

## EFFLUENT OBJECTIVES

| | | Conc. mg/l | Mass lb/day | kg/day |
|---|---|---|---|---|
| **Bio/Chemical Oxygen Demand:** | BOD5 | 30 | 37.5 | 17.0 |
| **Total Suspended Solids:** | TSS | 10 | 12.5 | 5.7 |
| **Total Kjeldahl Nitrogen:** | TKN | 3 | 3.8 | 1.7 |
| **Ammonia Nitrogen:** | NH3-N | 1 | 1.3 | 0.6 |
| **Oxidized Nitrogen:** | NOx-N | 7 | 8.8 | 4.0 |
| **Total Nitrogen:** | TN | 10 | 12.5 | 5.7 |
| **Total Inorganic Nitrogen:** | TIN | 8 | 10.0 | 4.5 |

## BASIN SIZING CALCULATIONS

1. **Mass of Bio-Solids necessary for treatment (lbs MLSS)**

   Based upon an F/M ratio of 0.072/day, the mass of mixed liquor suspended solids (MLSS) is:

   lb MLSS = (lb BOD5/day) / (F/M) = 6,053.5 lb MLSS = (2,745.8 kg)

2. **Total Reactor Volume at Low Level (Vlwl-T)**

   Based upon an MLSS concentration of 4,500 mg/l measured at the lowest water level, the total React Volume at low water level (Vlwl) is:

   Vlwl-T = lb MLSS/(MLSS mg/l x 8.34 lb/gal) = 0.161 MG-Total = 21,563.7 ft³-Total = (610.6 m³-Total)

3. **Reactor Volume for each Basin at Low Level (Vlwl/basin)**

   The AquaSBR shall utilize a 2 reactor system. The resultant unit volume for each reactor at the minimum water depth is:

   Vlwl/basin = (Vlwl-T)/(Number of Reactors) = 0.081 MG/basin = 10,781.9 ft³/basin = (305.3 m³/basin)

**4. Average Decantable Volume for each basin (ADV)**

Each AquaSBR basin shall perform treatment via 5 Cycle(s)/Day with each cycle comprising 288 Minutes (4.8 Hours). At the average daily flow (ADF) of 0.15 MGD, the batch volume at average conditions is:

ADV = ADF/(No. of Basins x No. Cycles/Day/Basin) = 15,000 gal = (56.8 m³)

**5. Reactor Volume per basin at Average Flow Conditions (Vawl/Basin)**

Vawl/Basin = Vlwl/Basin + ADV = 0.096 MG/basin = 12,787.2 ft³/basin = (362.1 m³/basin)

**6. Maximum Decantable Volume for each basin (MDV)**

The AquaSBR has been specifically designed to maintain 5 Cycle(s)/Day/Basin up to the Maximum Daily Flow stated above. Based upon the Maximum Daily Flow (MDF) of 0.2 MGD, the batch volume at maximum conditions is:

MDV = MDF/(No. of Basins x No. Cycles/Day/Basin) = 15,000 gal = (56.8 m³)

**7. Reactor Volume per basin at Maximum Flow Conditions (Vhwl/Basin)**

The maximum volume of each basin in the AquaSBR system is:

Vhwl/Basin = Vlwl/Basin + MDV = 0.096 MG/basin = 12,787 ft³/Basin = (362.1 m³/basin)

**8. Minimum Sidewater Depth (Min. SWD)**

The minimum sidewater depth (Min. SWD) must allow proper storage of sludge during the settle phase while providing a reasonable maximum water level. Based upon the design MLSS, the lowest operating water level is:

Min. SWD = 12.5 ft = (3.80 m)

**9. Selection of reactor geometry and dimensional requirements**

The AquaSBR can be configured for a variety of reactor geometries, quantities, and materials of construction. Typical construction may employ circular, square, or rectangular tanks in concrete, steel, or earthen-sloped basins. The following has been either assumed by Aqua or designated based upon supplied information:

| | | |
|---|---|---|
| Number of Basins (Nb): | = 2 | |
| Selected Reactor Geometry: | = Rectangular | |
| Length of Reactor: | = 36 ft | = (11 m) |
| Width of Reactor: | = 24 ft | = (7.3 m) |
| Minimum Water Depth: | = 12.5 ft | = (3.8 m) |
| Average Water Depth: | = 14.8 ft | = (4.5 m) |
| Maximum Water Depth: | = 14.8 ft | = (4.5 m) |
| Minimum Reactor Volume/Basin: | = 0.081 MG | = (305.310 m³) |
| Average Reactor Volume/Basin: | = 0.096 MG | = (362.096 m³) |
| Maximum Reactor Volume/Basin: | = 0.096 MG | = (362.096 m³) |

## PROCESS CALCULATIONS

### Cycle Structure

**1. Cycle Configuration**

In order to perform the necessary physical and biological treatment for the specified conditions, the following treatment phases shall be used:

| | |
|---|---|
| A.) Mixed-Fill | - True anoxic mixing, independent of aeration, with influent. |
| B.) React-Fill | - Aeration/Anoxic mixing with presence of influent. |
| C.) React | - Aeration/Anoxic mixing under true Batch conditions. |
| D.) Settle | - Quiescent solids/liquid separation. |
| E.) Decant/Idle | - Effluent withdrawal via solids excluding, dual control decanter. |
| F.) Sludge Waste | - Removal of excess biological sludge. |

**2. Cycle Times**

The following process segments have been determined specifically for this application based upon a combination of empirical data and established kinetic models adapted for the AquaSBR. The following summarizes the process conditions:

| | | | |
|---|---|---|---|
| A.) No. Of Cycles (Ncdb) | = 5 | E.) Mixing (Tmix) | = 3.47 Hours/Cycle |
| B.) Total Cycle Time (Tc) | = 4.8 Hours | F.) Settling (Tset) | = 1 Hours/Cycle |
| C.) Filling Time/Cycle (Tf) | = 2.4 Hours | G.) Decanting (Tdec) | = 0.33 Hours/Cycle |
| D.) Aeration (Tair) | = 1.8 Hours/Cycle | H.) Sludge Waste (Tsig) | = 5.4 Minutes/Cycle |

### Hydraulic Rentention Time (HRT)

**1. Hydraulic Retention @Average Design Conditions (HRT-avg)**

Based upon an average volume of 0.096 MG/Reactor and 2 reactor(s), the HRT at an average flow of 0.150 MGD is:

HRT-avg = (Vawl/Reactor x # Reactors)/ADF = 1.27 days (30.6 hours)

**2. Hydraulic Retention @ Maximum Design Conditions (HRT-mdf)**

Based upon a maximum volume of 0.096 MG/Reactor and 2 reactors, the HRT at a maximum flow of 0.150 MGD is:

HRT-mdf = (Vhwl/Reactor x # Reactors)/ADF = 1.27 days (30.6 hours)

### Sludge Production

**1. Net Sludge Yield (Yn)**

Based upon the design MLSS concentration, influent loading, and volume requirements stated above, the AquaSBR shall produce a certain quantity of sludge, as is typical of Activated Sludge Processes. The sludge yield factor, Yn is:

Yn = 0.892 lb Waste Activated Sludge/lb BOD5/Day

Please note that the calculated sludge yield, Yn, was estimated via a kinetic model which accounts for the influent organic and inorganic TSS as well as the developed Active, Endogenous, Inert-Organic, and Inert-Inorganic fractions of the MLSS.

**2. Net Sludge Production (lb WAS/Day)**

The net sludge production (dry solids basis) is:

lb WAS/Day = lb BOD5/Day x Yn = 390.5 lb WAS/day = (177.1 kg/day)

**3. Sludge Volume (Vs)**

The volume of sludge produced, assuming a settled sludge concentration of 1.00% is:

Vs = lb WAS/Day/(Sludge Conc. x 8.34) = 4682 gpd = (17.7 $m^3$/day)

4. **Mean Cell Retention Time (Ts)**

   The mean cell retention time (sludge age, Ts) of the proposed system necessary to attain the specified effluent objectives is:

   Ts = lb MLSS/(lb WAS/Day + lb TSSe/Day) = 15.0 days

5. **Oxygen Utilization Rates for Synthesis, Oxidation & Nitrification**

   Based upon a kinetic evaluation of the influent data with respect to the proposed design considerations, the estimated oxygen uptake rate (OUR) at average conditions is 46.6 mg/l/Hour. The process oxygen required is:

   OUR lb/Hour = OUR mg/l/Hour x Vawl/Basin x 8.34 = 37.1 lb O2/hr/basin = (16.8 kg/hr/basin)

## ***AERATION SYSTEM EQUIPMENT REQUIREMENTS***

**Actual Oxygen Requirement (AOR)**

1. **Oxygen Required For Organic Reduction (Rb)**

   The aeration system shall be designed to provide 1.50 lb O2 for each lb BOD5, as influent to the SBR system. This oxygen provision shall account for the oxygen utilization for synthesis, as well as endogenous respiration.

   Rb = 1.50 lb O2/lb BOD5 x lb BOD5 Applied/Day = 656.9 lb O2/day = (297.9 kg/day)

2. **Oxygen Required For Nitrification (Rn)**

   Additional oxygen may be necessary for Nitrification of TKN to NO3-N. While an effluent requirement may or may not exist, it may be difficult to prevent Nitrification from exerting an oxygen demand (when nitrogen is present in the influent). Nitrification requires 4.60 lb O2 to oxidize each lb of TKN to NO3-N.

   Rn = lb O2/lb TKN x lb TKN Applied/Day = 374.0 lb O2/day = (169.6 kg/day)

3. **Carbon Stabilized via Denitrification (Rd)**

   No credits for oxygen recovery via denitrification have been taken (Rd = 0)

4. **Total Actual Oxygen Requirement (AORt)**

   The total oxygen demand under process (field) conditions is:

   AORt = Rb + Rn – Rd = 1,030.8 lb O2/day (total) = (467.6 kg/day)

5. **Hourly Actual Oxygen Requirement (AORh)**

   Based on 1.77 hours of aeration per cycle, 5 Cycles/Day/Basin, and 2 Basin(s), the hourly AORh is:

   AORh = 58.4 lb O2/hr/basin = (26.5 kg/hr/basin)

6. **Actual Aeration Time Required To Meet Average Demand (At)**

   The aeration system has been designed to meet the design maximum oxygen requirement in 1.77 Hours/Cycle/Basin. Since average conditions will not require as much oxygen, the actual aeration time shall be adjusted to generate a power draw reflective of average conditions. The aeration time required at average conditions is:

   At = (OUR/AOR) x Design Aeration/Basin/Cycle = 1.1 hr/basin/Cycle

**Process Wastewater Conditions (FINE BUBBLE DIFFUSERS)**

1. **Field Oxygen Transfer Factor (FTF)**

While the AOR quantifies the necessary oxygen to satisfy the biochemical reactions, the process water possesses inherent characteristics that typically inhibit oxygen transfer as it compares to tap (clean) water. The FTF coefficient adjusts the oxygen transfer requirements in Field (dirty) conditions to Standard (clean) water conditions as follows:

FTF = Alpha x Theta^(T-20) x [(Beta x Csm) – Cr]/Cstm = 0.668

Where:

Alpha = Ratio of mass transfer rate of O2 in process water to clean water = 0.85

Beta = Ratio of saturation of O2 in process water to clean water = 0.95

Theta = Temperature correction factor for O2 transfer = 1.024

T = Design Reactor Temperature = 10.0 C

Cstm = Saturation DO at Mid-Depth and Standard Conditions = 10.94 mg/l

Csm = Cstm corrected for site Elevation and Temperature = 13.57 mg/l

Cr = Residual Dissolved Oxygen Concentration = 2.0 mg/l

**Standard Conditions**

1. **Standard Oxygen Requirement (SORh)**

The oxygen transferred at Standard conditions necessary to satisfy the required process oxygen demand at Field conditions is:

SORh = AORh / FTF = 87.4 lb O2/hr/basin = (39.6 kg/hr/basin)

2. **Standard Cubic Feet of Air per Minute (SCFM)**

The ability to transfer oxygen into the water under standardized conditions is:

SCFM = (SOR lb/Hour/Basin)/(60 x 0.0175 x SOTE/ft x Dsub) = 402 SCFM = (11.4 m³/M)

Where:

0.0175 = lb O2 per cubic foot of air at standard conditions.

SOTE/FT = Standard Oxygen Transfer Efficiency per foot submergence = 1.50%/ft = (4.92%/M)

Dsub= Average Diffuser Submergence = 13.8 ft = (4.2 m)

**Blower Inlet Conditions**

1. **Actual Inlet Pressure (Pa due to elevation and inlet filter/silencer/piping losses)**

Note: An assumed inlet loss due to blower fittings/piping of 0.25 psig has been assumed.

Pa = 14.696 – (Elevation, ft/2116.3) – 0.25 = 14.43 P.S.I.A. = (99.60 KPA)

2. **Blower Inlet Air Temperature in Degrees Rankine**

Ta = Ambient Air Temp (Deg F) + 460 = 545.0 Degrees R = (302.4 K)

3. **Inlet Cubic Feet of Air per Minute (ICFM)**

From the perfect gas law, the universal gas constant (MR) can relate standard conditions to inlet conditions, as:

ICFM = SCFM x (14.696 x Ta)/(Pa x 528) = 422.5 ICFM/basin = (11.9 m³/basin)

**Blower Discharge Conditions**

1. **Discharge Pressure (Pd)**

The discharge pressure includes the static pressure above the diffusers and dynamic losses from the blower discharge through the diffusers, as expressed by:

Pd = (0.4333 x Diffuser Submergence, ft) + System Losses, PSIG,

Where the assumed system losses account for 0.20 PSIG blower discharge losses, 0.50 PSIG piping losses from blower to diffuser, and 1.30 PSIG diffuser losses.

Average Discharge Pressure (Pda) = 7.98 PSIG = (55.06 KPA)
Maximum Discharge Pressure (Pdm) = 7.98 PSIG = (55.06 KPA)

**Average Blower Power Estimate**

**1. Estimated Average Power Draw (BHP)**

The following is a general equation that estimates the power draw of the blower at the average oxygen demand and average pressure. While the actual blower selection shall be made from manufacturer supplied curves, programs, or recommendations at maximum conditions, this equation shall be used to estimate the annual average aeration power. Unless stated otherwise, a blower efficiency (e) of 0.70 shall be used (typical range 0.60 to 0.70).

BHP = 0.227 x ICFM x [((Pa + Pda)/Pa)^0.283 – 1]/e = 17.9 BHP = (13.4 kW)

**2. Estimated Daily Power Required for Blowers (Pwa)**

Pwa = (BHP x 0.7457 x At x Ncdb x Nb) = 150.7 kW-hr/day

**Blower Selection**

**1. Blower Recommendation**

The actual blower and motor sizing must consider inlet conditions under operating temperature and pressure extremes. Motor size, for example, must be selected to handle inlet air at maximum density, which occurs at lowest operating temperatures. Blower size must be selected to deliver the required air volume at minimum density (maximum operating temperature) throughout the range of pressures. The following has been recommended to meet the design extremes:

| | | |
|---|---|---|
| Number of Blowers Operating/Basin: | = 1 | |
| Number of Total Blower Operating: | = 2 | |
| Number of Standby Units: | = 1 | |
| Total Number of Installed Units: | = 3 | |
| Motor Size of Each Blower: | = 30 HP | |
| Airflow Capacity of Each Blower: | = 402 SCFM | = 11.4 m³/min |
| Maximum Design Discharge Pressure: | = 8.0 PSIG | = 55.1 KPA |

## *MIXING SYSTEM EQUIPMENT REQUIREMENTS*

**1. Energy Requirements (Hp-mix)**

To provide uniform mixing of biological solids to a level typically encountered in activated sludge, approximately 25.0 HP/MG is necessary with the AquaDDM mixer. The mixing level required is:

Hp-mix = 25.0 HP/MG x Vawl/Basin = 2.4 HP = (1.8 kW)

Based upon the above approximate energy requirements, recommend: (1) - 3.0 NPHP AquaDDM Mixer(s)

**2. Reactor Turnover Time (Tm)**

To confirm the unit has been selected appropriately, the reactor contents must be completely mixed within 5 minutes. The selected mixer shall produce a recirculated flow (Qr) of 117,000 GPM, resulting in a turnover time:

Tm = Vawl/Basin x 10^6/Qr = 0.8 Minutes

**3. Average Power Estimation (Pwm)**

Pwm = NPHP x Lm x 0.7457 x Mixing hrs/cyc. x Nb x Ncdb = 71.3 kW-hr/day

Where:

Lm is the motor loading, typically 88-92% of full nameplate horsepower.

## *EFFLUENT DECANTING EQUIPMENT REQUIREMENTS*

**1. Decant Flow Rate Required at Maximum Design Flow (Qdec)**

The decanter shall remove effluent via gravity flow, reducing the water level from the maximum depth to the minimum depth in the design decant phase time (Tdec). The Decant flow required is:

Qdec = MDV/(Ncdb x Nb x Tdec) = 750 GPM = (47.3 l/sec)

The flow rate calculated above is the average rate (from high water level to low water level) at maximum design conditions. The actual decant flow rate will vary depending on the prevailing driving head, assuming the effluent valves are not throttled, flow is not pumped, or an orifice plate has not been employed. Refer to design notes for further decanter notes.

## *SLUDGE REMOVAL SYSTEM REQUIREMENTS*

**1. Sludge Flow Rate required at Average Design Flow (ADF)**

Sludge Flow Rate (Qs):

Sludge will be removed at the end of each cycle at the following rate:

Qs = Vs/(Ncdb x Nb x Tslg) = 87 GPM = (5.5 l/sec)

**2. Sludge Energy Required (Hp-sludge)**

Based upon an estimated average driving head of 15.0 ft and an assumed pump efficiency of 60%, the sludge removal energy required is:

Hp-sludge = (Flowrate x head)/(3,960 x efficiency) = 0.549 BHP = (0.41 kW)

**3. Average Power Estimation (Pws)**

Pws = BHP x Tslg x Ncdb x Nb x 0.7457 = 0.367 kW-hr/day

Note: Power estimation assumes sludge is pumped. Refer to design notes for discussion if gravity sludge wasting is employed.

## SLUDGE HOLDING BASIN DESIGN PARAMETERS

| | | |
|---|---|---|
| **Sludge Flowrate to the Digester** | = 4,683.5 gal/day | = (17.7 m³/day) |
| **Inlet Sludge Concentration** | = 1.00% | |
| **Solids Loading to the Digester** | = 390.6 lb/day | = (177.2 kg/day) |
| **Inlet Volatile Solids Fraction** | = 75.7% | |

## SLUDGE HOLDING BASIN DESIGN VALUES

| | | | | | |
|---|---|---|---|---|---|
| **No./Basin Geometry:** | = 1 Rectangular Basin(s) | | | | |
| **Length of Basin:** | = 12 ft | = (3.6 m) | | | |
| **Width of Basin:** | = 18 ft | = (5.5 m) | | | |
| **Min. Water Depth:** | = 10.3 ft | = (3.1 m) | **Min. Basin Vol. Basin:** | = 16,641.5 gal | = (61.4 m³) |
| **Max. Water Depth:** | = 14.8 ft | = (4.5 m) | **Max. Basin Vol. Basin:** | = 23,831.3 gal | = (89.1 m³) |

| | | | | | |
|---|---|---|---|---|---|
| **No./Basin Geometry:** | = 1 Rectangular Basin(s) | | | | |
| **Length of Basin:** | = 22.75 ft | = (6.9 m) | | | |
| **Width of Basin:** | = 18 ft | = (5.5 m) | | | |
| **Min. Water Depth:** | = 10.3 ft | = (3.1 m) | **Min. Basin Vol. Basin:** | = 31,549.5 gal | = (117.6 m³) |
| **Max. Water Depth:** | = 14.8 ft | = (4.5 m) | **Max. Basin Vol. Basin:** | = 45,180.4 gal | = (170.8 m³) |

## SLUDGE HOLDING PROCESS DESIGN PARAMETERS

| | | |
|---|---|---|
| **Solids Retention Time:** | = 29.6 days | |
| **Digester Design Temperature:** | = 10 C | |
| **Volatile Solids Destruction:** | = 41.3% | |
| **Digester Solids Concentration:** | = 2% | |
| **Oxygen Supplied for Digestion:** | = 2.00 lbs O2 per lb VSS Destroyed | |
| **Oxygen Distribution Per Basin:** | = 100.0% | |
| **Actual Oxygen Required:** | = 244.2 lb/day | = (110.8 kg/day) |
| **Volatile Percentage After Digestion:** | = 64.6% | |
| **Estimated Dry Solids to be Removed:** | = 268.5 lb/day | = (121.8 kg/day) |
| **Volume of Solids to be Removed:** | = 1,609.6 gal/day | = (6.09 m³/day) |
| **Estimated Supernatant Volume:** | = 20,586.5 gal/basin | = (77.93 m³/basin) |
| **Assumed Supernatant Duration:** | = 180 minutes | |
| **Calculated Supernatant Flow:** | = 114.4 gpm | = (7.2 l/sec) |

1. The Volatile Solids Destruction listed above shall be used for determination of the oxygen demand during summer conditions. It should be noted that the actual VSS destruction will be dependant upon digester inlet condition, temperature, and operating conditions.
2. The Digester Solids Concentration is reflected as an average concentration, assuming the operations include frequent settling and supernating practices.

## AquaSBR

### Influent Valves

**2 Existing Influent Valve(s) will be used as follows:**

- 6 inch electrically operated valve(s).

### Mixers

**2 AquaDDM Direct Drive Mixer(s) will be provided as follows:**

- 3 HP Aqua-Aerobic Systems Endura Series Model FSS DDM Mixer(s).
- Unit will be factory wet tested and checked for vibration not to exceed: 5.0 mils for 900 RPM units, 4.0 mils for 1200 RPM units, or 3.0 mils for 1800 RPM units.

### Mixer Mooring

**2 Mixer cable mooring system(s) consisting of:**

- #12 AWG-four conductor electrical service cable(s).
- Aerial support tie(s).
- Electrical cable strain relief grip(s), 2 eye, wire mesh.
- 304 stainless steel mooring cable(s).
- Maintenance mooring cable loop(s).
- Stainless steel mooring spring(s).

### Decanters

**2 Decanter Assembly(ies) consisting of:**

- 6x4 Aqua-Aerobics decanter(s) with fiberglass float, 304 stainless steel weir, 304 stainless steel restrained mooring frame, and painted steel power section with #14-10 conductor power cable.
- 8 inch diameter decant hose assembly.
- 4" schedule 40 304 stainless steel restrained mooring post(s) with base plate.
- 8 inch DeZurik electrically operated butterfly valve(s) with Limitorque actuator.

**2 Valve Extension(s) will be provided as follows:**

- Valve extension(s) stainless steel.

### Transfer Pumps/Valves

**2 Existing pump assembly(ies) will be reused:**

- Existing Pump(s) and accessories.

### Retrievable Fine Bubble Diffusers

**4 Retrievable Fine Bubble Diffuser Assembly(ies) consisting of:**

- 20 diffuser tubes consisting of two flexible EPDM porous membrane sheaths mounted on a rigid support pipe with 304 stainless steel band clamps.
- 304 stainless steel manifold weldment.
- 304 stainless steel leveling angles.
- 304 stainless steel leveling studs.
- 304 stainless steel vertical support beam.
- 304 stainless steel vertical air column assembly.
- Galvanized upper vertical beam and pulley assembly.

- Galvanized top support bracket.
- 3" EPDM flexible air line with ny-glass quick disconnect end fittings.
- Galvanized threaded flange.
- 3" manual isolation butterfly valve with cast iron body, EPDM seat, aluminum bronze disk and one-piece steel shaft.
- Ny-glass quick disconnect cam lock adapter.
- 304 stainless steel adhesive anchors.
- Brace angles.

**1 Diffuser Electric Winch(es) will be provided as follows:**

- Portable electric winch.

**Positive Displacement Blowers**

**3 Positive Displacement Blower Package(s), with each package consisting of:**

- Aerzen 30HP Rotary Positive Displacement Blower(s).
- 6" manual butterfly valve(s).

**Misc/Spare Parts**

**1 Set(s), Spare Parts will be provided as follows:**

- (1) Decanter linear actuator.
- (1) Decanter linear actuator capacitor.
- Limit switch(es).
- (1) Limit switch arm.
- Input card(s)
- Output card(s).
- Analog input card(s).
- Analog output card(s).
- (40) Diffuser sleeve(s).
- Hose clamp(s).
- (1) Diffuser clamp installation tool.
- 6 inch Inlet Filter(s)
- Set(s), 30 HP Blower V-Belts.
- Spare fuses
- Lens spares consisting of (3) amber, (3) red, (3) yellow, (3) green, (3) blue, and (3) white.
- Level sensing pressure transducer(s).
- Selector switch(es).
- Tube(s) grease.
- Blower synthetic lubricant supply(ies) for one year
- Pump seal leak relay(s).
- Operator interface.
- Power supply(s).
- Allen Bradley Compactlogix programmable controller.
- Control relay(s).
- One (1) gallon Series N69 Hi-Build Epoxoline paint.
- DO probe(s).

**1 Set of Equipment Tags consisting of the following:**

- Equipment tags.

## Controls

**Controls wo/Starters**

**1 Controls Package(s) will be provided as follows:**

- NEMA 12 panel enclosure suitable for indoor installation and constructed of painted steel.
- Fuse(s) and fuse block(s).
- Transient eliminator TE/110.
- Uninterupted power supply.
- Allen Bradley Compactlogix programmable controller.
- Operator interface.
- Selector switch(es).
- Push-To-Test pilot light(s).
- Alarm horn and silence button.
- Internal control panel light.
- Chart recorder(s).
- Remote Access Ethernet Modem.
- Panel will be UL listed and labeled.

# APPENDIX F

Expanded Environmental Assessment, Prepared by Cameron Engineering and Associates, LLC.

*Expanded Environmental Assessment*

*For:*

# Village of Westhampton Beach Sewer System

Village of Westhampton Beach
Suffolk County, New York

October 2017

**Cameron Engineering & Associates, LLP**

# TABLE OF CONTENTS

**1. EXECUTIVE SUMMARY ..... 1-1**
1.1. PROJECT DESCRIPTION ..... 1-1
*1.1.1. Background ..... 1-1*
*1.1.2. Purpose, Public Benefits, and Operation ..... 1-3*
*1.1.3. Location ..... 1-4*
1.2. POTENTIAL IMPACTS AND PROPOSED MITIGATION ..... 1-5
*1.2.1. Impact on Land ..... 1-5*
*1.2.2. Impact on Water ..... 1-6*
*1.2.3. Impact on Air ..... 1-6*
*1.2.4. Impact on Plants and Animals ..... 1-7*
*1.2.5. Impact on Agricultural Land Resources ..... 1-7*
*1.2.6. Impact on Aesthetic Resources ..... 1-7*
*1.2.7. Impact on Cultural and Historic Resources ..... 1-7*
*1.2.8. Impact on Critical Environmental Areas ..... 1-8*
*1.2.9. Impact on Transportation ..... 1-8*
*1.2.10. Impact on Energy ..... 1-8*
*1.2.11. Noise and Odor Impacts ..... 1-8*
*1.2.12. Impact on Public Health ..... 1-8*
*1.2.13. Impact on Growth and Character of Community or Neighborhood ..... 1-8*
*1.2.14. Need for Additional Community Services ..... 1-11*
1.3. CONCLUSIONS ..... 1-12
**2. PROJECT DESCRIPTION ..... 2-1**
2.1. INTRODUCTION ..... 2-1
2.2. LOCATION ..... 2-2
2.3. REGULATORY/APPROVAL PROCESS ..... 2-2
*2.3.1. New York State ..... 2-2*
*2.3.2. Suffolk County ..... 2-3*
*2.3.3. Town of Southampton ..... 2-3*
*2.3.4. Village of Westhampton Beach ..... 2-3*
2.4. CONSTRUCTION SCHEDULE ..... 2-3
**3. ANALYSIS OF POTENTIAL ENVIRONMENTAL IMPACTS ..... 3-1**
3.1. IMPACT ON LAND ..... 3-1
*3.1.1. Geology ..... 3-1*
*3.1.2. Soils and Topography ..... 3-1*
*3.1.3. Construction Impacts ..... 3-2*
3.2. IMPACT ON WATER ..... 3-4
*3.2.1. Groundwater ..... 3-4*
*3.2.2. Flooding and Flood Zones ..... 3-6*
*3.2.3. Stormwater Collection, Treatment, and Recharge ..... 3-6*
3.3. IMPACT ON PLANTS AND ANIMALS ..... 3-7
3.4. IMPACT ON AGRICULTURAL LAND RESOURCES ..... 3-7
3.5. IMPACT ON AESTHETIC RESOURCES ..... 3-7
3.6. IMPACT ON CRITICAL ENVIRONMENTAL AREAS ..... 3-8
3.7. NOISE AND ODOR IMPACTS ..... 3-8
3.8. IMPACT ON PUBLIC HEALTH ..... 3-8
3.9. IMPACT ON CULTURAL AND HISTORIC RESOURCES ..... 3-8
3.10. IMPACT ON GROWTH AND CHARACTER OF COMMUNITY OR NEIGHBORHOOD ..... 3-9
*3.10.1. Land Use ..... 3-9*
*3.10.2. Zoning ..... 3-9*
*3.10.3. Growth-Inducing Aspects of the Proposed Project ..... 3-10*
*3.10.4. Demand for Additional Community Services ..... 3-12*

# TABLE OF TABLES

Table 3-1: Potential Impacts on Groundwater Quality ..... 3-5
Table 3-2: Land Uses within the Proposed Sewer District ..... 3-9

# TABLE OF FIGURES

(Figures are found at the end of each chapter)

Figure 2-1: Sewer District Service Area Boundary Map
Figure 2-2: Preliminary Collection System Layout Map Area Plan

# 1. Executive Summary

## *1.1. Project Description*

### 1.1.1. Background

The proposed project involves the establishment of the Incorporated Village of Westhampton Beach Sewer System. The proposed Map and Plan for the District is separated into four phases. Phase 1 focuses on the area surrounding Main Street and includes the Moniebogue Bay watershed – which has been identified by the New York State Department of Environmental Conservation (NYSDEC) as an impaired waterbody. Moniebogue Bay is also the only water body that is located fully within the Village's watershed. Phase 2 (north of Main Street) and Phase 3 (centered on Montauk Highway/CR 80) have been identified as future sewer service areas within the Village. Phase 4 comprises all tax parcels located within the Village that are not located within the Phase 1, 2 or 3 Service Areas and would be served by innovative advanced on-site nitrogen removal systems.

The proposed Phase 1 Sewer Service Area is approximately 31.29 acres in total area. While over 70% of the proposed Phase 1 Service Area is residential land, the service area also includes the Main Street commercial district (approximately 27.8% of land in the service area). In total, the proposed Phase 1 Service Area comprises 88 residential properties and 68 commercial properties.

The proposed Phase 1 sewer system will consist of a combination of gravity and low pressure sewers, two conventional pump stations and two force mains. The properties within the Phase 1 Service Area that abut Main Street will be serviced by gravity sewers. The proposed gravity sewer trunk-lines will be routed behind the tax lots that abut both the north and south side of Main Street through either municipally-owned parking lots and/or easements on private property.

The existing Gabreski Airport Sewage Treatment Plant (STP) has been identified as the preferred treatment location for sewage flow from the proposed service area. The Gabreski Airport STP would be modified to provide the additional capacity to support the Village's flow for its Phase 1 Service Area. It is anticipated that existing equipment at the facility would be replaced to increase capacity without requiring expansion outside of the footprint of the facility or any additional tankage. It is anticipated that following construction of the proposed Phase 1 Sewer System, the

new sewer service area would become part of the existing Suffolk County Sewer District No. 24 - Gabreski-Municipal.

A 24-month construction period is anticipated for the Phase 1 sewers, pump stations, force mains and treatment facility improvements. This schedule anticipates multiple contracts being performed simultaneously. It has been determined by the Village that the collection system construction activities will be suspended during the summer season, between Memorial Day to Labor Day, to avoid significant disruption to business and available parking during this high traffic time of year.

This Environmental Assessment will focus on the potential impacts of the proposed Phase 1 Service Area, as the preliminary design and the identification of funding sources have been completed for this area. In particular, this Expanded Environmental Assessment examines the existing conditions, potentially significant adverse impacts that might result from the implementation of Phase 1 of the proposed project, and mitigation of the construction and operation of the proposed sewer district. A Full Environmental Assessment Form (EAF) is provided in Appendix A.

While Phases 2, 3 and 4 have been included in the Map and Plan to show the overall plan for future sewer service/nitrogen reduction in the Village, these future phases have yet to be designed or appropriated for funding. For example, although the Gabreski Airport STP is capable of providing additional capacity to support the sewage flow for the Phase 1 Service Area, it is anticipated that expansion of the existing footprint of the Gabreski Airport STP would be required to accommodate the Phase 2 and 3 Service Areas of the proposed sewer system. A plan to accommodate the sewage flow for Phases 2 and 3, and the implementation of those phases has not been determined by the Board of Trustees as yet. Due to these outstanding questions regarding their design and funding, there are no current plans to implement Phases 2 and 3 of the project. As such, the information on these potential future phases is too speculative to properly analyze the environmental impacts of Phases 2 and 3 at this time.

The Village is currently looking at options for the implementation of Phase 4 of the proposed project, which consists of the installation of innovative advanced on-site nitrogen removal systems. In the past year, some local municipalities have adopted, or are considering adopting, code changes that would require the installation of such systems under certain circumstances. If the Village decides to consider similar code changes, those aspects of Phase 4 would have no functional connection with Phase 1

and would instead be implemented separately, through regulations and grant programs adopted by Suffolk County, the Town of Southampton, and/or the Village of Westhampton Beach, regarding the installation of the type of innovative systems contemplated by Phase 4.[1] While portions of Phase 4 are expected to proceed simultaneously with Phase 1 of the proposed project, the Village will conduct an independent SEQRA analysis once a program is identified that may suit the Village's needs. Likewise, at such time as the Village seeks to implement Phases 2 or 3 of the proposed project at some point in the future, the Village will conduct a SEQRA analysis once designs are completed and funding sources are identified.

Although this Environmental Assessment does not address Phases 2, 3 or 4 of the proposed project, all of these phases are expected to have only beneficial environmental impacts, and no adverse impacts at all. The main purpose of the proposed sewer system and the use of advanced denitrification systems is to reduce nitrogen loading into local waterbodies in order to improve water quality within the Village. Accordingly, focusing the subject review on the potential environmental impacts of Phase 1 is appropriate and will not be any less protective of the environment than if the cumulative impacts of all four phases were considered simultaneously.

### 1.1.2. Purpose, Public Benefits, and Operation

The purpose of the proposed project is to establish a municipal sewer system within the Incorporated Village of Westhampton Beach. The proposed sewer service area is centered on the Village's Downtown Central Business District. The proposed Phase 1 Service Area includes 156 individual tax lots which are currently served by on-site septic systems. The use of individual on-site septic systems, along with the area's shallow groundwater, are key contributors to poor water quality in local waterbodies – particularly Moniebogue Bay, which is the only local waterbody wholly located within the Village's watershed. Given these existing conditions, NYSDEC classifies Moniebogue Bay as an impaired waterbody. In addition, based on a three year observation period (2014-2016) of 28 Long Island waterbodies by the Gobler Laboratory, Moniebogue Bay was ranked as the worst location for water clarity and had the highest levels of brown tide out of all the sites. Moniebogue Bay was also the

[1] The applicable sanitary regulations and grant programs adopted by Suffolk County and the Town of Southampton are codified under Suffolk County Code Chapter 839, Article I ("Residential Innovative and Alternative On-Site Wastewater Treatment System Grant Assistance Program"), Southampton Town Code Chapter 123, Article VIII ("Innovative and Alternative On-Site Wastewater Treatment Systems") and Southampton Town Code Chapter 177 ("Septic System Rebate and Incentive Program").

second-worst site in terms of chlorophyll concentration (a proxy for the biomass of microalgae).

Based upon the University of Chicago Marine Biological Laboratory's nitrogen loading model, it is estimated that wastewater accounts for 89% (6,909 kg/year) of the total external nitrogen load within Moniebogue Bay.[2] The installation of sewers within the proposed Phase 1 Service Area would result in a 30% reduction in total external nitrogen loads within Moniebogue Bay – a decrease of approximately 5,000 pounds of nitrogen per year.[3]

While other areas must also be addressed to improve the water quality of these waterbodies (i.e., stormwater management, vegetation/wildlife management), the proposed sewer system will significantly reduce nitrogen loading to contributing groundwater within the Moniebogue Bay watershed.

Following construction, the proposed Village of Westhampton Beach Sewer System would be operated and maintained by Suffolk County (SCSD 24 – Gabreski-Municipal).

### 1.1.3. Location

The proposed Phase 1 Service Area is located within the Village of Westhampton Beach. It encompasses the central portion of the Main Street commercial district and spans from just west of Sunset Avenue/Mitchell Road to just east of Mill Avenue/Library Avenue. The northern boundary of the service area is located just north of Main Street with the southern boundary running along Stevens Lane. Total area of the tax parcels within the proposed sewer service area (Phase 1) is 31.29 acres.

[2] The Marine Biological Laboratory, University of Chicago. *Nitrogen Loading Model*. 2017. <http://nload.mbl.edu/>

[3] Gobler, Christopher J., *Quantifying Nitrogen Loading To From Village Of Westhampton Beach To Surrounding Water Bodies And Their Mitigation By Creating A Sewer District*. Stony Brook University School of Marine and Atmospheric Sciences. June 2017.

## *1.2. Potential Impacts and Proposed Mitigation*

### 1.2.1. Impact on Land

**Soils and Topography**

*Potential Impacts* – The project area is relatively flat (approximately 95% of the proposed service area has a slope of less than 10%. Stormwater runoff during and following construction could lead to minor erosion and off-site sedimentation if not properly controlled.

*Proposed Mitigation* – See construction mitigation below.

**Construction Impacts**

*Potential Impacts of Proposed Project* – Like any construction project, the construction of the Village of Westhampton Beach Sewer System would have short-term environmental impacts. They could include soil erosion, noise, traffic disruption, and dust.

*Proposed Mitigation* – Since the proposed sewer system will be entirely within the boundary of the Village of Westhampton Beach, the Village will coordinate with contractors to determine the appropriate timing/location of trucks arriving to the area. The Village could also use its municipal lots to accommodate construction and workers' vehicles.

It is anticipated that a stormwater pollution prevention plan (SWPPP) will be required as part of the Phase 1 Service Area contract since more than one acre of land area will be disturbed during work. However, provisions for storm water management associated with the collection and conveyance system may not be necessary and only erosion and sediment control may be required since this project is for the installation of underground utilities (underground utility projects only require erosion and sediment controls as per NYSDEC regulations). While the components of the SWPPP will be determined during the design phase of the project; it is anticipated that silt fencing and inlet protection to storm water catch basins throughout the project area would be required.

Weekday construction activities would be confined to the hours of 7 AM to 6 PM. Weekend construction activities would be restricted to the hours of 8 AM to 5 PM. There would be no construction activity on holidays. In addition, the Village has

determined to suspend construction activities during from Memorial Day to Labor Day to minimize impacts on local roadways and parking lots during the summer peak season.

### 1.2.2. Impact on Water

**Groundwater**

*Potential Impacts* – The proposed project will reduce the impacts of nutrient loading on the area's groundwater. By replacing individual, on-site septic systems with a municipal sewer system, impacts to groundwater would be minimal and generally confined to the construction phase of the project.

Depth to groundwater within the Phase 1 Service Area is quite low – ranging from two (2) feet to 12 feet. Currently, there are no USGS groundwater monitoring wells within the project area. Potential impacts to groundwater include the effects from stormwater runoff (addressed in the following section). Water consumption by the parcels within the proposed Phase 1 Service Area is roughly equivalent to the estimated sewage flows - approximately 60,000 gallons per day (see section on Utilities).

*Proposed Mitigation* – No mitigation is proposed as no significant adverse impacts are anticipated. The proposed sewer system will work to reduce nutrient loading which will to help to protect contributing groundwater within the Moniebogue Bay watershed.

**Stormwater**

*Potential Impacts* – The proposed project would not result in any new impervious surfaces within the Village.

*Proposed Mitigation* – No mitigation is proposed as no significant adverse impacts are anticipated. As discussed in Section 1.2.1, it is anticipated that a stormwater pollution prevention plan (SWPPP) will be required for the collection and conveyance system contract, however provisions for stormwater management may not be required (only erosion and sediment control measures may be required).

### 1.2.3. Impact on Air

*Potential Impacts of Proposed Project* – Potential impacts to air quality are anticipated to be minimal.

*Proposed Mitigation* – No mitigation is proposed as no significant adverse impacts are anticipated.

### 1.2.4. Impact on Plants and Animals

*Potential Impacts of Proposed Project* – The proposed service area is nearly fully developed.

*Proposed Mitigation* – No mitigation is proposed as no significant adverse impacts are anticipated.

### 1.2.5. Impact on Agricultural Land Resources

There are no agricultural land resources within the proposed service area.

### 1.2.6. Impact on Aesthetic Resources

*Potential Impacts of Proposed Project* – The visual character of the service area would change slightly as a result of the proposed pump stations associated with Phase 1. The two proposed pump stations would be located on existing Village easements (7 Glovers Lane and 77 Main Street).

*Proposed Mitigation* – No mitigation is proposed as no significant adverse impacts are anticipated. Both easements are located in existing public parking lots, both of which are buffered from nearby properties and roads by existing trees and vegetation.

### 1.2.7. Impact on Cultural and Historic Resources

*Potential Impacts of Proposed Project* – By letter dated October 13, 2017, the New York State Office of Parks, Recreation and Historic Preservation (OPRHP) stated that the U.S. Post Office on Main Street is listed on the State and National Registers of Historic Places and that St. Mark's Church at 40 Main Street is eligible for listing on the State and National Register of Historic Places. The OPHRP letter further opined that, based upon the project description and area of potential effect, the proposed work will have no adverse impact upon historic resources.

Based upon consultation with OPHRP, there are no other protected cultural, historic or archeological resources within the proposed Phase 1 Service Area.

*Proposed Mitigation* – No mitigation is proposed as no significant adverse impacts are anticipated.

### 1.2.8. Impact on Critical Environmental Areas

There are no critical environmental areas within the proposed service area.

### 1.2.9. Impact on Transportation

*Potential Impacts of Proposed Project* – The traffic generated by the proposed project will have no perceptible impact on the level of service on the surrounding roadway network. There is ample parking in the vicinity to support temporary construction worker parking and equipment storage needs.

*Proposed Mitigation* – No mitigation is proposed as no significant adverse impacts are anticipated. It is anticipated that the Village will coordinate construction activities to minimize impacts on local roadways and parking lots during the summer peak season.

### 1.2.10. Impact on Energy

*Potential Impacts of Proposed Project* – A slight increase in energy consumption would occur as a result of the proposed project (electrical systems for the pump stations).

*Proposed Mitigation* – No mitigation is proposed as no significant adverse impacts are anticipated.

### 1.2.11. Noise and Odor Impacts

*Potential Impacts of Proposed Project* – As the proposed project would utilize an existing sewage treatment plant (Gabreski Airport STP) that is located outside of the Phase 1 Service Area, noise and odor impacts within the service area are anticipated to be minimal. The two proposed pump stations are unlikely to produce noise or odor that would exceed the existing ambient levels.

*Proposed Mitigation* – No mitigation is proposed as no significant adverse impacts are anticipated.

### 1.2.12. Impact on Public Health

There would be no adverse impact on public health from the proposed project.

### 1.2.13. Impact on Growth and Character of Community or Neighborhood

*Potential Impacts of Proposed Project* – Based on the planned system design capacity, the proposed Phase 1 collection system will not introduce any additional

capacity to this area. Current wastewater flow is estimated at 60,000 gpd, which is equivalent to the design flow for this portion of the project. The main purpose of the sewer system project is not to increase flow capacity in the Village but to re-direct sewage flow that is currently being disposed of via on-site septic systems to the proposed sewer system, thereby decreasing nitrogen loading in local waterbodies. As no significant flow capacity is planned at this time, overall development potential within the service area would remain similar to existing conditions.

Zoning was first adopted in the Village in 1953, and has been amended from time to time over the years to implement recommendations resulting from the adoption of comprehensive planning studies prepared for the Village. The existing zoning designations within the Phase 1 Service Area consist of B-1 (Business District 1), HC (Hamlet Commercial) and MF-20 (Multi-Family Residence) districts. The density contemplated for both residential and non-residential development in these zoning categories was considered as part of the previously adopted comprehensive plans. In fact the most recently adopted comprehensive plan, the 2006 Business District Comprehensive Plan Update, recognized that the lack of adequate wastewater treatment in the Village prevents the implementation of many of the identified goals and objectives of said plan.

The Village is not contemplating any zoning changes in association with the sewer system project, either in terms of dimensional, use, density, or parking requirements. To the extent that the actual sewerage use in the Phase 1 Service Area turns out to be less than the estimated/allotted design flow capacity of 60,000 gpd, the excess capacity would merely provide more flexibility under the existing zoning scheme by facilitating a larger spectrum of the uses already contemplated thereunder. For example, any excess capacity could be used to accommodate certain desirable and already-permitted uses that require adequate wastewater flow, such as second floor apartments, new restaurant uses and/or increased seating capacity in existing restaurants. All of these uses are already permitted by special exception permit in the subject HC and B-1 zoning districts.

Similarly, even without any excess capacity, the installation of the proposed sewer system could result in the substitution of certain existing uses for these types of more desirable uses. Thus, while the proposed sewer system will create the infrastructure for the existing zoning scheme and facilitate more flexibility within that scheme, it will not result in any additional uses or any increases in density, parking or dimensional requirements that are not already contemplated by the existing zoning.

Furthermore, any changes that result from this increased flexibility are expected to be minimal in nature given that little excess sewerage capacity above the estimated/allotted 60,000 gpd is expected to become available.

In addition to the sewer system project, the Village Board of Trustees is in the process of implementing a proposed "Main Street Reconstruction Project" focusing on infrastructure improvements that will enhance safety and circulation (both pedestrian and vehicular) as well as the beautification of the Village's downtown area. To that end, the Main Street Reconstruction project contemplates the replacement of existing storm drains and sidewalks, repaving the street, upgrading light fixtures and landscaping, and redesigning certain intersections in the downtown area. While the location of the work associated with the Main Street Reconstruction Project will overlap with a portion of the Phase I Service Area for the sewer system project, the two projects are entirely independent from one another. The Village is conducting a separate SEQRA review for the Main Street Reconstruction Project, and there are not expected to be any adverse environmental impacts resulting from that project, nor will the Main Street Reconstruction Project include any actions that would result in further development or growth-inducing changes.

In addition to these two projects, the Village Board of Trustees has commissioned a study that will provide an independent review of the business zoning districts in the Village and formulate a master plan for uses within the business districts, with a primary focus on the B-2 zoning district. This study is similarly unrelated to the proposed sewer system project, and while the Village may ultimately adopt certain zoning amendments based on the findings of the study, said changes will primarily concern the B-2 zoning district, which is outside of the Phase 1 Service Area. To the extent there may be certain changes within the B-1 zoning district, they are anticipated to be only minor tweaks that will not include any zoning changes, triggers for further development, growth-inducing aspects, or intensification of the permitted uses within the B-1 district. And while the Village will also conduct an independent SEQRA review for the proposed business district study, the Village is still in the preliminary planning stages for that project and has not formulated a proposal or action for SEQRA purposes at this time. Moreover, even at this stage of the planning process, the items under consideration that may affect the B-1 district are not the types of changes that would be expected to have any adverse environmental impacts.

Accordingly, the proposed sewer system, Main Street Reconstruction Project, and business district master plan study are separate, unrelated projects to be undertaken by the Village. These projects are not interdependent, will not have any cumulative adverse impacts, and do not require a cumulative environmental impact review.

*Proposed Mitigation* – No mitigation is proposed as no significant adverse impacts are anticipated. The Village is not proposing or contemplating any zoning changes in association with, or as a result of, the proposed sewer system, and therefore the existing zoning requirements with respect to use, density, parking and dimensional requirements will remain in effect. Any changes facilitated by this project are therefore consistent with the applicable zoning and the Village's adopted comprehensive plan, and would be viewed as a positive impact that has been planned for by, and beneficial to, the Village. Each significant development application would require individual review and approval from the Village of Westhampton Beach. In particular, uses that generate the largest amounts of wastewater are regulated by the issuance of Special Exception permits from the Village Board of Trustees. It is anticipated that the Village will require specific mitigation measures for any new development application. The type and quantity of mitigation is highly variable based upon what specific property owners will build on their properties within the allowable uses and densities of the zoning code. The impacts of each new development would be assessed by a site-specific SEQRA review of each application

1.2.14. Need for Additional Community Services

**Emergency Services**

*Potential Impacts of Proposed Project* – The proposed project is not anticipated to generate significant additional demand for emergency medical services, fire, and police protection.

*Proposed Mitigation* – No mitigation is proposed as no significant adverse impacts are anticipated.

**Utilities**

*Potential Impacts of Proposed Project* – The proposed pump stations are expected to consume a maximum rate of approximately 550 kW-hr of electricity per day. Potable water usage is expected to be insignificant.

*Proposed Mitigation* – No mitigation is proposed as no significant adverse impacts are anticipated.

### *1.3. Conclusions*

Installation of a sewer system within the Village of Westhampton Beach is not anticipated to create any significant adverse environmental impacts within the proposed service area or surrounding area. The proposed service area has been identified and analyzed by both Suffolk County and the Village of Westhampton Beach as a target area for sewering that would result in significant environmental and public health benefits, as well as eliminate an identified barrier to the Village implementing the vision, goals and objectives for it's central business district.

# 2. Project Description

## *2.1. Introduction*

The proposed project involves the construction of Phase 1 of the Incorporated Village of Westhampton Beach Sewer System (approx. 31.29 acres), which encompasses much of the Village's Main Street Business District. The proposed collection system will be a hybrid system comprised of a combination of low pressure and gravity sewers. The system design features are explained in further detail in the proposed Map and Plan for the Formation of the Village of Westhampton Beach Sewer System prepared by the Village's consultants, H2M.

The gravity sewers located on the north side of Main Street will be comprised of approximately 1,300 linear feet of 8" DR-18 PVC sewer and 700 linear feet of 10" DR-18 PVC sewer with 33 manholes. The "north" gravity sewers will drain to a conventional wet well pump station sited in a municipal parking lot located on the west side of Glovers Lane. The gravity sewers located on the south side of Main Street will be comprised of approximately 800 linear feet of 8" DR-18 PVC sewer and 700 linear feet of 10" DR-18 PVC sewer with 33 manholes. The "south" gravity sewers will drain to a conventional wet well pump station sited in a private parking lot located on the east side of Moniebogue Lane. The "south" gravity sewers will also intercept flow from two low pressure sewer lines that are proposed to extend south down Mitchell Road and Library Avenue. The two low pressure sewer lines will collect flow from the high density residential properties located along each of the respective streets. The low pressure sewers were selected as the preferred conveyance technology for these parts of the sewer service area due to shallow ground water conditions and topography not conducive for gravity flow north to the proposed interceptor.

The conventional wet well pump station located on the south side of Main Street will pump flow north and discharge to the pump station located on the north side of Main Street. The force main from the south pump station will be comprised of approximately 1,200 linear feet of 4" DR-9 HDPE pipe. The pump station located on the north side of Main Street will pump all of the flow from the Phase 1 service area up to the Gabreski Sewage Treatment Plant. The force main from the north pump station will be routed north along Glovers Lane to Mill Road, where it will continue northwest along Mill Road and turn north onto Oak Street. The force main will continue north on Oak Street, crossing Montauk Highway onto Old Riverhead Road, where it will continue north and cross the Long Island Railroad tracks and turn east onto S. Perimeter Road and continue onto the Gabreski Airport property and discharge to the existing STP. The force main from the north pump station

will be comprised of approximately 12,500 linear feet of parallel 4" DR-9 HDPE pipe. Parallel pipes will be installed to provide operational flexibility and also additional capacity should the need arise in the future.

It is anticipated that following construction of the proposed Phase 1 Sewer System, the new sewer service area would become part of the existing Suffolk County Sewer District No. 24 - Gabreski-Municipal.

This Expanded Environmental Assessment examines the existing conditions, potentially significant adverse impacts that might result from the proposed project, and mitigation of the construction and operation of the proposed sewer service area. A Full Environmental Assessment Form (EAF) is provided in Appendix A.

A Location/Aerial Map is provided in Figure 2-1. The environmental impacts associated with the proposed project are not expected to be significant and are described below.

### *2.2. Location*

The proposed Phase 1 Service Area is located within the Village of Westhampton Beach. It encompasses the central portion of the Main Street commercial district and spans from just west of Sunset Avenue/Mitchell Road to just east of Mill Avenue/Library Avenue. The northern boundary of the service area is located just north of Main Street with the southern boundary running along Stevens Lane. Total area of the parcels within the proposed sewer service area (Phase I) is 31.29 acres.

### *2.3. Regulatory/Approval Process*

The following regulations must be met to permit the construction of the Incorporated Village of Westhampton Beach Sewer System:

2.3.1. New York State

1. State Environmental Quality Review Act (SEQRA) compliance

3. New York State Department of Environmental Conservation (NYS DEC)

- State Pollutant Discharge Elimination System (SPDES) permitting
- Stormwater Pollution Prevention Plan (SWPPP)
- Engineering Design Report review
- Dewatering Permit

4. New York State Environmental Facilities Corporation (NYS EFC) funding approval

2.3.2. Suffolk County

1. Suffolk County Department of Health Services (SC DHS), Engineering Design Report review

2. Suffolk County Department of Public Works (SC DPW), Division of Highways road opening permits

3. Suffolk County Sewer Infrastructure Program funding approval

4. Out of District connection to Gabreski Airport STP

2.3.3. Town of Southampton

1. Road opening permits

2.3.4. Village of Westhampton Beach

1. Lead Agency - State Environmental Quality Review Act (SEQRA) process

2. Village Board approval

3. Road opening permits

### *2.4. Construction Schedule*

Following the bid phase and contract execution, construction is estimated to extend approximately 24 months, subject to weather-related delays and other unforeseen events. Per Village of Westhampton Beach Code §110-3 Subsection E - The operation of any construction device or the performance or engagement in construction work, building, demolition, excavating, pile driving, hoisting, demolishing, dredging, hammering, or sawing within the limits of the Village of Westhampton Beach, other than between the hours of 7:00 a.m. and 6:00 p.m. on Monday through Friday and between the hours of 8:00 a.m. and 5:00 p.m. on Saturday and Sunday. While construction activities are already prohibited on Sundays during July and August, the Village has decided to suspend all construction activities from Memorial Day to Labor Day to minimize impacts on local businesses and roadways. There will be no construction activities during any holidays.

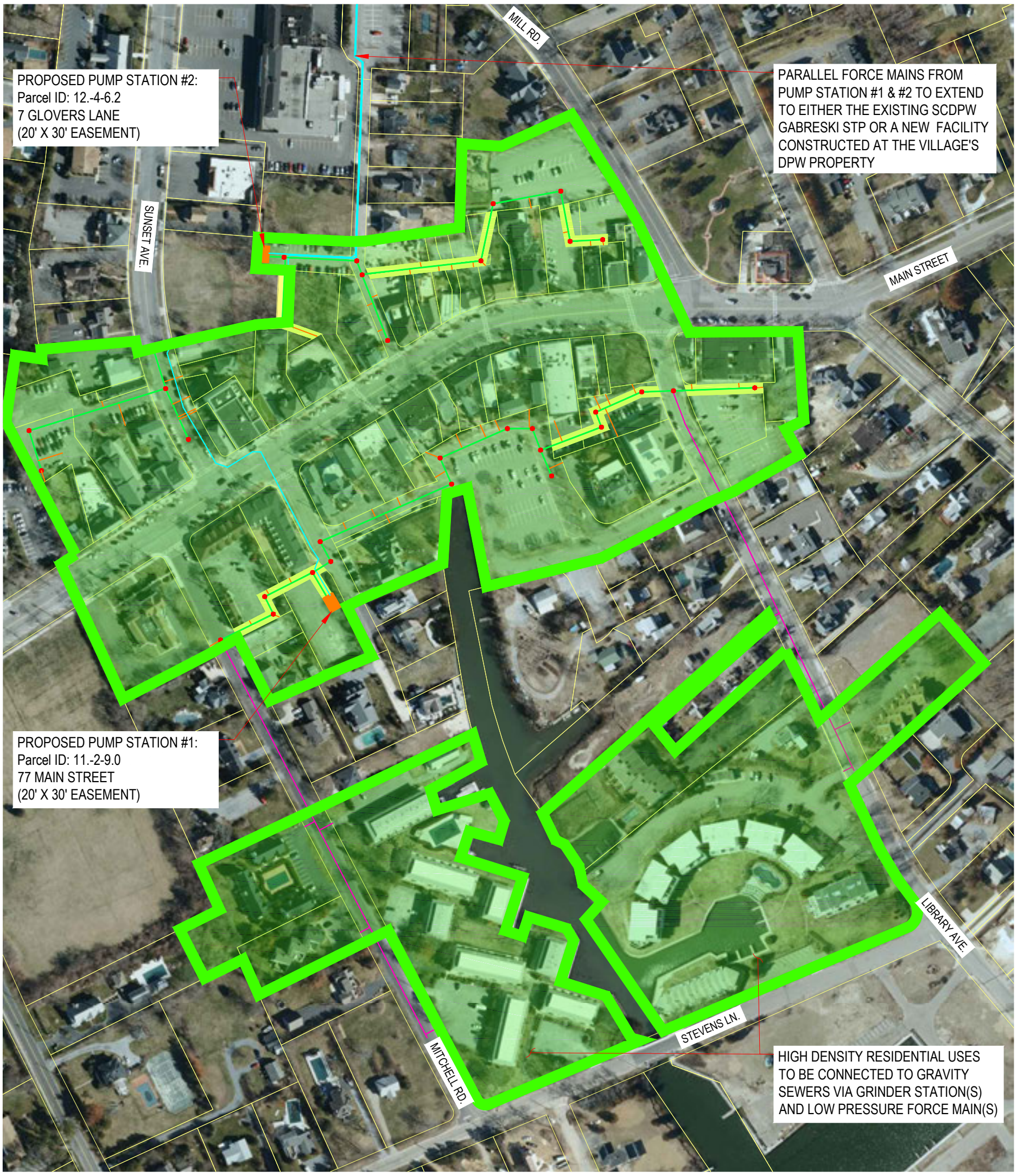


# Phase 1 Sewer Service Area Map

SCALE: NTS

N

* AERIAL BACKGORUND IMAGERY WAS OBTAINED FROM THE NEW YORK STATE GIS CLEARINGHOUSE WEBSITE:http://gis.ny.gov/gateway/mg/

Sanitary Flow Projection based on SCWA usage records: (ADF approx. 60,000 gpd)

| NYS Land Use | Description | Area | | Tax Parcels | Existing Sanitary Flow | | Existing Sanitary Flow | |
|---|---|---|---|---|---|---|---|---|
| | | Acerage | % Acreage | Tax Parcel Count | SCWA - summer | % SCWA Flow | SCWA - winter | % SCWA Flow |
| 100 | Agricultural | 0.00 ac. | 0.0% | 0 parcels | 0 gpd | 0.0% | 0 gpd | 0.0% |
| 200 | Residential | 21.95 ac. | 70.2% | 88 parcels | 33,440 gpd | 55.7% | 5,580 gpd | 9.3% |
| 300 | Vacant Land | 0.34 ac. | 1.1% | 1 parcels | 400 gpd | 0.7% | 400 gpd | 0.7% |
| 400 | Commercial | 8.70 ac. | 27.8% | 66 parcels | 24,400 gpd | 40.7% | 11,200 gpd | 18.7% |
| 500 | Recreation & Entertainment | 0.00 ac. | 0.0% | 0 parcels | 0 gpd | 0.0% | 0 gpd | 0.0% |
| 600 | Community Services | 0.30 ac. | 1.0% | 1 parcels | 1,760 gpd | 2.9% | 300 gpd | 0.5% |
| 700 | Industrial | 0.00 ac. | 0.0% | 0 parcels | 0 gpd | 0.0% | 0 gpd | 0.0% |
| 800 | Public Services | 0.00 ac. | 0.0% | 0 parcels | 0 gpd | 0.0% | 0 gpd | 0.0% |
| 900 | Wild, Forested, Conservation Lands & Public Parks | 0.00 ac. | 0.0% | 0 parcels | 0 gpd | 0.0% | 0 gpd | 0.0% |
| | TOTAL . . . | 31.29 ac. | 100% | 156 parcels | 60,000 gpd | 100.0% | 17,480 gpd | 100.0% |

LEGEND:

- SCTM PARCEL BOUNDARIES
- PROPOSED GRAVITY SEWER MAIN HOLE
- PROPOSED 3" Ø LPS MAIN
- PROPOSED SEWER SERVICE AREA
- PROPOSED SEWER SERVICE LATERAL
- PROPOSED SEWER SYSTEM EASEMENT LOCATIONS (20' WIDE)
- PROPOSED GRAVITY SEWER MAIN
- PROPOSED PUMP STATION SITE
- PROPOSED FORCE MAIN

CLIENT

**Incorporated Village of Westhampton Beach**

PROJECT #: WHBV 16-01

DATE: 7/14/2016

H2M architects + engineers

Melville, NY New City, NY Albany, NY Parsippany, NJ

C:\Users\nbono\appdata\local\temp\AcPublish_692\Sewer Service Area Map_DRAFT.dwg Last Modified: Oct 13, 2017 - 12:45pm Plotted on: Oct 13, 2017 - 1:01pm By nbono

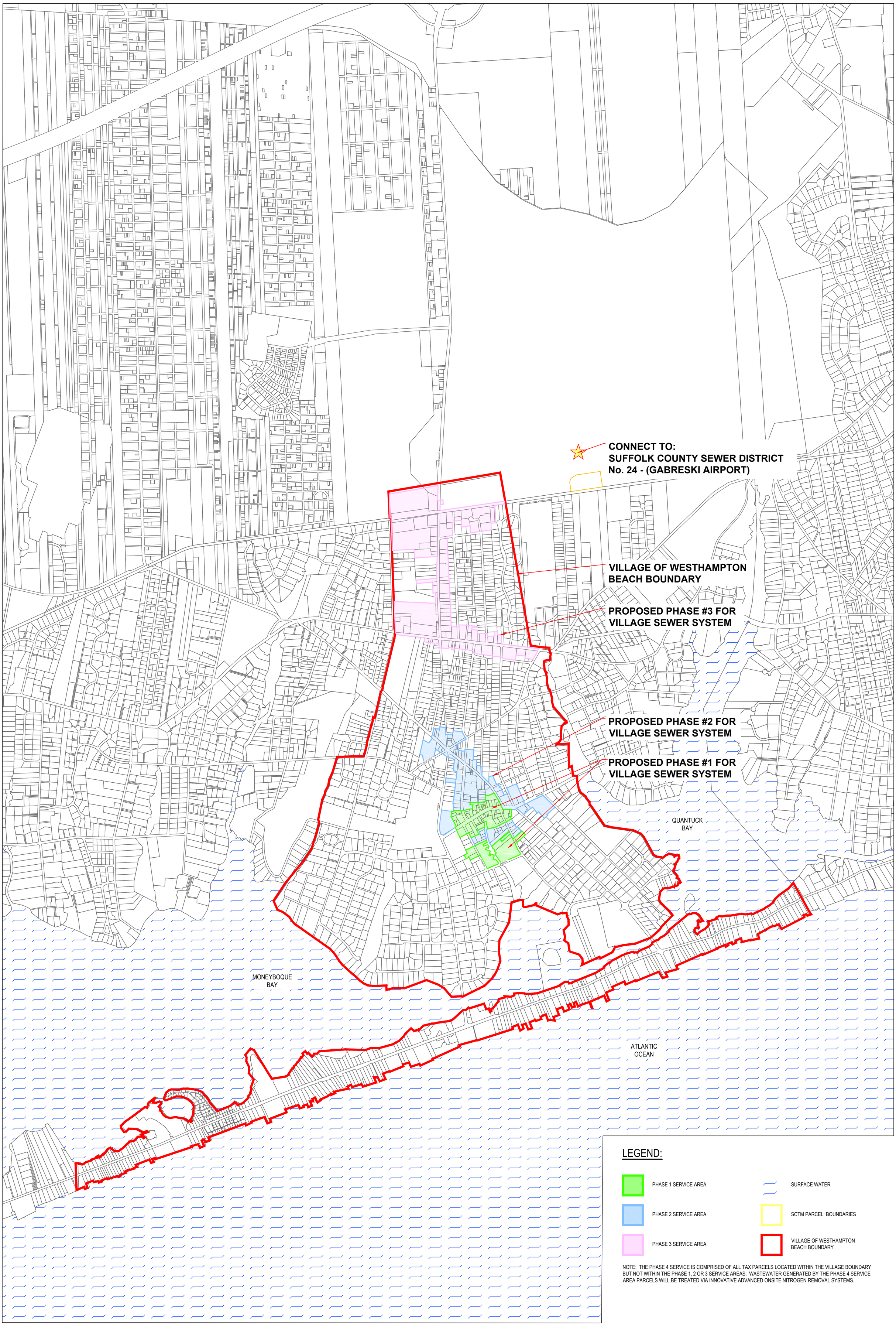


NOTE: THE PHASE 4 SERVICE IS COMPRISED OF ALL TAX PARCELS LOCATED WITHIN THE VILLAGE BOUNDARY BUT NOT WITHIN THE PHASE 1, 2 OR 3 SERVICE AREAS. WASTEWATER GENERATED BY THE PHASE 4 SERVICE AREA PARCELS WILL BE TREATED VIA INNOVATIVE ADVANCED ONSITE NITROGEN REMOVAL SYSTEMS.

# Village of Westhampton Beach Sewer System Overview Map

SCALE: 1" = 1000'-0"

N

H2M architects + engineers
Melville, NY 11747 | New City, NY 10956
Albany, NY 12205 | Parsippany, NJ 07054
White Plains, NY 10601 | Howell, NJ 07731

# 3. Analysis of Potential Environmental impacts

## *3.1. Impact on Land*

### 3.1.1. Geology

*Existing Conditions* - Long Island's geology is especially important as it relates to the population's source of drinking water. Because all of Nassau and Suffolk County drinking water is derived from groundwater, the geological formations that retain that water are referred to collectively as a sole-source aquifer. These aquifers are recharged by rainfall and consequently all activities that occur at the surface have the potential to impact the quantity and quality of the aquifers' recharge. Long Island ultimately rests on bedrock, impermeable rock composed of schist and gneiss.

The Lloyd Aquifer rests on the bedrock and is isolated from the shallower Magothy Aquifer by a 100-foot thick layer of clay. The Lloyd aquifer and overlying clay are part of the Raritan Formation, fine to coarse-grained sand and gravel.

The Magothy Formation is separated from the Raritan Formation by the Raritan clay layer. The Magothy Formation consists of sand, silt, and clay fluvial deposits with scattered clay lenses.

Sand and gravel from the last Ice Age of 15,000 years ago were deposited on top of the Magothy Formation. Most shallow private wells and some municipal wells draw from the Glacial Aquifer.

*Potential Impacts of Proposed Project* – Only the surface glacial deposits would be impacted by the sewer system installation. Deeper geological layers would not be impacted by the proposed project.

*Proposed Mitigation* – No mitigation is proposed as no significant adverse impacts are anticipated.

### 3.1.2. Soils and Topography

*Existing Conditions* – The proposed Phase 1 Service Area is gently sloped, with over 95% of the service area having a slope of less than 10%. Approximately 3% of the proposed service area land has a slope of 10-15% and 2% of the land has a slope greater than 15%. Based on the most recent USGS LIDAR digital elevation model (DEM), the minimum elevation of the service area is approximately two (2) feet (located at the rear of a residential parcel on Library Avenue) and the maximum elevation is approximately 14 feet.

The United States Department of Agriculture (USDA) Web Soil Survey[4] provides the most current soil information for Suffolk County and is useful as a general evaluation of the existing soils. According to the Web Soil Survey, the proposed service area comprises two different types of soils. The most prevalent type of soil within the proposed service area (approximately 31 acres/89% of total area) is *Riverhead sandy loam, 0 to 3 percent slopes* (RdA). Riverhead sandy loam is a well-drained soil with most nearly level slopes. The remaining area is classified as *Cut and fill land, gently sloping* (CuB) and occupies approximately 3 acres/9% of total area). The remaining area within the proposed service area is classified as *Water* by the Web Soil Survey (approximately one acre/2% of total area). This water area comprises dock/canal space within the proposed service area.

*Potential Impacts of Proposed Project* – Relatively minor excavation work would be required the installation of the sewer mains and pump stations.

*Proposed Mitigation* – See construction impacts section below.

### 3.1.3. Construction Impacts

*Potential Impacts of Proposed Project* – The construction of the proposed sewer system, like any construction project, would have short-term impacts on the environment related strictly to the process itself. These could include soil erosion, noise, traffic disruption, and dust. Construction of the hybrid sewer system and two pump stations is estimated to extend approximately 24 months, subject to weather-related delays and other unforeseen events. Construction equipment required to complete the project includes: excavator(s), front loader(s), dump truck(s), directional drilling equipment, roadway milling equipment, vibratory pavement roller(s), saw-cutting equipment, miscellaneous hand tools, and surveying equipment.

Trenches will be required to install gravity sewers and sewer lateral connections. Low pressure sewer main lines will be installed via direction drilling; low pressure sewer building connections will require trenching. It is estimated that trench depths will vary between less than 4 feet below grade to greater than 10 feet below grade depending on location. Trench widths will also vary between 8 feet to 10 feet. The actual trench widths may be greater or less than anticipated based on the means and methods deployed by the installing contractor.

[4] Soil Survey Staff, Natural Resources Conservation Service, United States Department of Agriculture. Web Soil Survey. Available online at http://websoilsurvey.nrcs.usda.gov/. Accessed [05/05/2015].

During the trench work phase of the project, it is anticipated that a minimum of five (5) trucks will be necessary to support the active work area assuming the contractor will be working within one section of the service area at a time and not spread throughout. Trench locations will be determined during the detailed design phase to minimize conflicts with existing below grade utilities and minimize temporary roadway closures and temporary traffic pattern alterations. In total, there would be 4,700 linear feet (LF) of piping throughout the Phase 1 Service Area and 12,500 LF of piping running from the north pump station to the Gabreski Airport STP.

Excavated materials generated during sewer installation are anticipated to be used for backfill. Very little of the excavated material is anticipated to be removed from the site. The materials excavated during sewer installation are expected to be temporarily staged alongside the trench during daily activities and backfilled before the end of work activities on each day to eliminate the need to stockpile materials. Unsuitable materials will be hauled offsite when encountered and suitable materials will be trucked in and used as needed.

The number of construction workers would be highly dependent on the contractors schedule and planned production rate (i.e. more workers required if higher rate of production is planned). It is anticipated that all contracts (sewers, pump stations and treatment plant retrofits) would progress concurrently. Staging areas for all contracts would be finalized during the detailed design phase; it is anticipated that the staging/parking areas for workers of all contracts will be located on existing Village and/or County properties.

Per Village of Westhampton Beach Code §110-3 Subsection E - Construction activities are only permitted between 7:00 a.m. and 6:00 p.m. on Monday through Friday and between 8:00 a.m. and 5:00 p.m. on Saturday and Sunday. While construction activities are already prohibited on Sundays during July and August, the Village has decided to suspend all construction activities from Memorial Day to Labor Day to minimize impacts on local businesses and roadways. There will be no construction activities during any holidays.

*Proposed Mitigation* – It is anticipated that a Stormwater Pollution Prevention Plan (SWPPP) will be required for the collection and conveyance system contract, however, provisions for storm water management may not be necessary and only erosion and sediment control may be required since this project is for the installation of underground utilities (underground utility projects only require erosion and sediment controls as per NYSDEC regulations). The final components of the SWPPP

will be determined during the design phase of the project. It is anticipated that silt fencing and inlet protection to storm water catch basis throughout the project area will be required. Additional requirements may be necessary following detailed design.

## *3.2. Impact on Water*

### 3.2.1. Groundwater

*Existing Conditions* – While the proposed sewer service area is not located in a Special Groundwater Protection Area (SGPA) as designated by the Suffolk County Department of Health Services and Long Island Comprehensive Special Groundwater Protection Area Plan, the existing Gabreski Airport STP is located within the Central Suffolk SGPA. An SGPA is defined by the Long Island Regional Planning Board[5] as a "*recharge watershed area within a designated sole source area contained within counties having a population of one million or more which is particularly important for the maintenance of large volumes of high quality groundwater for long periods of time*."

The proposed Phase 1 Service Area is located in Hydrogeological Zone IV and the existing Gabreski Airport STP is located in Zone III. Both Zones are considered sensitive areas due to limited aquifer size. Article 6 of the Suffolk County Sanitary Code (SCSC) established these Groundwater Management Zones in an effort to limit groundwater nitrogen concentrations to 6 mg/L in Zone IV and 4 mg/L in Zone III. As such, Article 6 restricts residential density to 20,000 SF within Zone IV and 40,000 SF within Zone III, unless the area is served by a community sewage treatment plant.

Nitrates from lawn fertilizers and discharges from on-site wastewater disposal systems have contaminated portions of these Zones. Additional contamination has also occurred in parts of these Zones from synthetic organic chemicals derived from industrial and other activities.

The three (3) major aquifers or saturated water-bearing strata beneath the surface of Nassau and Suffolk Counties are the Upper Glacial, Magothy, and Lloyd aquifers. The upper glacial and Magothy aquifers are the major sources of drinking water for Long Island (see section on Geology). Groundwater below the site generally flows horizontally toward the shore where it discharges to the bays and the Atlantic Ocean.

[5] L. E. Koppelman, A. Kunz, E. Tanenbaum, and D. Davies. The Long Island Comprehensive Special Groundwater Protection Area Plan, Long Island Regional Planning Board, 1992.

As a result, the protection of groundwater is important to both public drinking and surface water quality. Depth to groundwater within the Phase 1 Service Area is quite low – ranging from two (2) feet to 12 feet. Currently, there are no USGS groundwater monitoring wells within the project area.

The existing buildings in the project area are unsewered and utilize on-site septic systems. Article 6 of the Suffolk County Sanitary Code limits nitrogen concentration in groundwater to 10 mg/L. It is estimated that the nitrogen concentration from existing on-site septic systems is equivalent to approximately 37.4 mg/L.

*Potential Impacts of Proposed Project* – Impacts to groundwater include those related to withdrawals and others related to infiltration. Depending upon future development patterns, the proposed project could result in an increase in withdrawal of groundwater from Suffolk County Water Authority wells. Current water consumption within the proposed service area is estimated to be approximately 60,000 gallons per day (gpd), based upon Suffolk County Water Authority service records.

As discussed earlier, nitrogen concentration from existing on-site septic systems is approximately 37.4 mg/L. This concentration is roughly 3.7 times greater than the groundwater discharge limit of 10 mg/l. The proposed collection and treatment system would reduce nitrogen concentration discharge level to 10 mg/L. Table 3-1 below provides a comparison between existing nitrogen discharge loading and nitrogen discharge loading following the completion of the proposed project.

**Table 3-1: Potential Impacts on Groundwater Quality**

| | **Existing Conditions** | **Proposed Project** |
|---|---|---|
| Estimated Wastewater Flow (gallons per day) | 60,000 gpd | 60,000 gpd |
| Estimated Nitrogen Concentration in septic discharge (milligrams per liter) | 37.4 mg/L | 10 mg/L |
| Total Amount of Nitrogen (pounds) | 22.5 lbs. | 5.0 lbs. |

The SUNY Stony Brook Report prepared by Dr. Chris Gobler (See Appendix B) indicated that Phase 1 of the sewering project would remove nearly 5,000 pounds of nitrogen from Moniebogue Bay Watershed or approximately 22% of current loading.

*Proposed Mitigation* – No mitigation is proposed as no significant adverse impacts are anticipated.

### 3.2.2. Flooding and Flood Zones

*Existing Conditions* – Due to its proximity to Moniebogue Bay, most of the proposed Phase 1 service area is located within the "AE" zone (100-year floodplain) on the Federal Emergency Management Agency flood zone map. A smaller area of the proposed service area falls within the "X" zone, which is referred to as having "0.2% Annual Chance of Flooding" (500-year floodplain).

*Potential Impacts of Proposed Project* – After completion, the flooding potential of the proposed service area would be unchanged.

*Proposed Mitigation* – No mitigation is proposed as no significant adverse impacts are anticipated.

### 3.2.3. Stormwater Collection, Treatment, and Recharge

*Existing Conditions* – Stormwater from the existing project service area drains primarily through pervious land cover, which comprises primarily landscaped areas. Private drywells also provide drainage for many of the existing buildings. Based upon the National Land Cover Database 2011 (NLCD 2011), the most recent national land cover product created by the Multi-Resolution Land Characteristics (MRLC) Consortium, the entire Phase 1 Service Area is classified as 'Developed'. Under this general classification, there are four land cover classes represented within the proposed service area:

***Developed, Open Space (Approximately 5% of Phase 1 Service Area)*** *- Areas with a mixture of some constructed materials, but mostly vegetation in the form of lawn grasses. Impervious surfaces account for less than 20% of total cover. These areas most commonly include large-lot single-family housing units, parks, golf courses, and vegetation planted in developed settings for recreation, erosion control, or aesthetic purposes.*

***Developed, Low Intensity (Approximately 17% of Phase 1 Service Area)*** *-Areas with a mixture of constructed materials and vegetation. Impervious surfaces account for 20% to 49% percent of total cover. These areas most commonly include single-family housing units.*

***Developed, Medium Intensity (Approximately 59% of Phase 1 Service Area)*** *- Areas with a mixture of constructed materials and vegetation. Impervious surfaces account for 50% to 79% of the total cover. These areas most commonly include single-family housing units.*

***Developed High Intensity (Approximately 19% of Phase 1 Service Area)*** *- Highly developed areas where people reside or work in high numbers. Examples include apartment complexes, row houses and commercial/industrial. Impervious surfaces account for 80% to 100% of the total cover.*

*Potential Impacts of Proposed Project* – The proposed project would not alter the existing land cover or drainage characteristics of the service area.

*Proposed Mitigation* – It is anticipated that a stormwater pollution prevention plan (SWPPP) will be required for the collection and conveyance system contract, however, provisions for storm water management may not be necessary and only erosion and sediment control may be required since this project is for the installation of underground utilities (underground utility projects only require erosion and sediment controls as per NYSDEC regulations). The components of the SWPPP will be determined during the design phase of the project; currently, it is anticipated that silt fencing and inlet protection to storm water catch basis throughout the project area.

### *3.3. Impact on Plants and Animals*

*Existing Conditions* – The proposed service area is nearly fully developed. Based on data provided by NYSDEC, there are no rare plant or animal habitats located within the proposed Phase 1 Service Area.

*Potential Impacts of Proposed Project* – The proposed service area would remain fully developed.

*Proposed Mitigation* – No mitigation is proposed as no significant adverse impacts are anticipated.

### *3.4. Impact on Agricultural Land Resources*

There are no agricultural land resources within the proposed service area.

### *3.5. Impact on Aesthetic Resources*

*Existing Conditions* – The proposed service area is centered on the Village Business District, which is currently developed with predominately residential and commercial land uses. The northern section of Moniebogue Bay runs through the center of the proposed service area.

*Potential Impacts of Proposed Project* - The visual character of the service area would change slightly as a result of the proposed pump stations associated with Phase 1. The two

proposed pump stations would be located on existing Village easements (7 Glovers Lane and 77 Main Street).

*Proposed Mitigation* – No mitigation is proposed as no significant adverse impacts are anticipated. Both easements are located in existing public parking lots, both of which are buffered from nearby properties and roads by existing trees and vegetation.

### *3.6. Impact on Critical Environmental Areas*

There are no critical environmental areas within or in the vicinity of the proposed service area.

### *3.7. Noise and Odor Impacts*

*Existing Conditions* – There are currently minor noise levels and odors associated with the existing commercial and residential uses.

*Potential Impacts of Proposed Project* – As the proposed project would utilize an existing sewage treatment plant (Gabreski Airport STP) that is located outside of the Phase 1 Service Area, noise and odor impacts within the service area are anticipated to be minimal. The two proposed pump stations are unlikely to produce noise or odor that would exceed the existing ambient levels.

*Proposed Mitigation* – No mitigation is proposed as no significant adverse impacts are anticipated.

### *3.8. Impact on Public Health*

The installation of municipal sanitary sewer system would not involve adverse impacts to public health.

### *3.9. Impact on Cultural and Historic Resources*

*Existing Conditions* – By letter dated October 13, 2017, the New York State Office of Parks, Recreation and Historic Preservation (OPRHP) stated that the U.S. Post Office on Main Street is listed on the State and National Registers of Historic Places and that St. Mark's Church at 40 Main Street is eligible for listing on the State and National Register of Historic Places. The OPHRP letter further opined that, based upon the project description and area of potential effect, the proposed work will have no adverse impact upon historic resources.

Based upon consultation with OPHRP, there are no other protected cultural, historic or archeological resources within the proposed Phase 1 Service Area.

*Potential Impacts of Proposed Project* – No adverse impacts are anticipated.

*Proposed Mitigation* – No mitigation is proposed as no significant adverse impacts are anticipated.

## *3.10. Impact on Growth and Character of Community or Neighborhood*

### 3.10.1. Land Use

*Existing Conditions* – Land uses within the proposed Phase 1 Service Area are primarily residential and commercial. The table below summarizes the various land use classes, including acreage and percentage of total area within the proposed service area boundaries.

**Table 3-2: Land Uses within the Proposed Sewer District**

| Land Use Class | Acreage | Percent |
|---|---|---|
| Residential | 21.95 | 70.2% |
| Commercial | 8.70 | 27.8% |
| Vacant Land | 0.34 | 1.1% |
| Community Services | 0.30 | 1.0% |
| **Total** | **31.29** | **100.00%** |

*Potential Impacts of Proposed Project* - The proposed project would not directly change the land uses existing within the proposed Phase 1 Service Area. However, the installation of a sanitary sewer system could potentially permit a wider range of uses already permitted under the existing zoning scheme, such as second floor apartments and restaurants with larger seating capacities (if granted as a special exception use).

*Mitigation Required* - There is no mitigation required as the proposed project would not alter the existing land uses within the proposed service area. Potential impacts of future growth scenarios are discussed below in *Section 3.10.3*.

### 3.10.2. Zoning

*Existing Conditions* – The proposed Phase 1 Service Area is located entirely within the Village of Westhampton Beach and includes the following zoning districts: B-1 (Business District 1), HC (Hamlet Commercial) and MF-20 (Multi-Family Residence).

*Potential Impacts of Proposed Project* – The proposed project will not change the zoning within the Village of Westhampton Beach, and the Village has no plans to modify the existing zoning within the Phase 1 Service Area in association with, or as a result of, the proposed project.

*Proposed Mitigation* – No mitigation is proposed as no significant adverse impacts are anticipated.

### 3.10.3. Growth-Inducing Aspects of the Proposed Project

*Existing Conditions* – The proposed project area currently functions as the Village of Westhampton Beach downtown central business district, which is developed primarily with commercial uses along Main Street, surrounded primarily by residential uses.

*Potential Impacts of Proposed Project* – Based on the planned system design capacity, the proposed Phase 1 collection system will not introduce any additional capacity to this area. Current wastewater flow is estimated at 60,000 gpd, which would also serve as the design flow for this portion of the project. The main purpose of the sewer system project is not to increase flow capacity in the Village but to re-direct sewage flow that is currently being disposed of via on-site septic systems to the proposed sewer system, thereby decreasing nitrogen loading in local waterbodies. As minimal additional flow capacity is planned at this time, overall development potential within the service area would remain similar to existing conditions.

Zoning was first adopted in the Village in 1953, and has been amendment from time to time over the years to implement recommendations resulting from the adoption of comprehensive planning studies prepared for the Village. The existing zoning designations within the Phase 1 Service Area consist of B-1 (Business District 1), HC (Hamlet Commercial) and MF-20 (Multi-Family Residence) districts. The density contemplated for both residential and non-residential development in these zoning categories where consider as part of the previously adopted comprehensive plans. In fact the most recently adopted comprehensive plan, the 2006 Business District Comprehensive Plan Update, recognized that the lack of adequate wastewater treatment in the Village prevents the implementation of many of the identified goals and objectives of said plan.

The Village is not contemplating any zoning changes in association with the sewer system project, either in terms of dimensional, use, density, or parking requirements. To the extent that the actual sewerage use in the Phase 1 Service Area turns out to be

less than the estimated/allotted design flow capacity of 60,000 gpd, the excess capacity would merely provide more flexibility under the existing zoning scheme by facilitating a larger spectrum of the uses already contemplated thereunder. For example, any excess capacity could be used to accommodate certain desirable uses that generate additional wastewater flow, such as second floor apartments, new restaurants and/or increased seating capacity in existing restaurants, all of which are already permitted by special exception permit in the subject HC and B-1 zoning districts.

Similarly, even without any excess capacity, the installation of the proposed sewer system could result in the substitution of certain existing uses for these types of more desirable uses. Thus, while the proposed sewer system will create the infrastructure for the existing zoning scheme and facilitate more flexibility within that scheme, it will not result in any additional uses or any increases in density, parking or dimensional requirements that are not already contemplated by the existing zoning. Furthermore, any changes that result from this increased flexibility are expected to be minimal in nature given that little excess sewerage capacity above the estimated/allotted 60,000 gpd is expected to become available.

In general, the types of uses that could introduce significant wastewater flow (i.e., restaurants, apartments, hotels) all require a special exception (SE) permit from the Village Board of Trustees. For these uses, the permit review process would entail an individual analysis of each new development or change in use, specifically analyzing impacts on: water use/sewage flow, traffic/trip generation, parking, emergency services, solid waste, energy, tax revenues, and several other parameters. The review process would also allow the Village to control the timing and phasing of any new development, which would reduce the potential for cumulative impacts from multiple new projects. As a result, any new development or significant changes in use will likely occur over a relatively long period of time.

Without an increase in design flow, it is not anticipated that any significant amount of development would occur within the proposed service area (due to both existing Suffolk County wastewater regulations in Groundwater Management Zone IV and the control of SE permits by the Board of Trustees). Furthermore, it is anticipated that future development would occur incrementally over time, with each new development subject to further site-specific SEQRA review.

*Proposed Mitigation* – None required. Each significant development application would require individual review and approval from the Village of Westhampton

Beach. The Village is not proposing or contemplating any zoning changes in association with, or as a result of, the proposed sewer system, and therefore the existing zoning requirements with respect to use, density, parking and dimensional requirements will remain in effect. Any growth induced by this project is therefore consistent with the applicable zoning and the Village's adopted comprehensive plan, and would be viewed as a positive impact that has been planned for, and beneficial to the Village. Any growth-inducing aspects of this project are further limited by the fact that the design flow for the Phase 1 Service Area will be equivalent to the current estimated wastewater flow of 60,000 gpd, thus precluding any significant increases in the development potential for the Phase 1 Service Area, Furthermore, it is anticipated that Village will require specific mitigation measures for any new development application. The type and quantity of mitigation is highly variable based upon what specific property owners will build on their properties within the allowable uses and densities of the zoning code, the impacts of each new development would be assessed by a site-specific SEQRA review of each application.

### 3.10.4. Demand for Additional Community Services

**Emergency Services**

*Existing Conditions* – Police protection is provided by the Westhampton Beach Police Department, located at 165 Mill Road, Westhampton Beach, New York, 11978. Fire protection is the responsibility of the Westhampton Beach Fire Department, located at 92 Sunset Avenue, Westhampton Beach, New York, 11978. Ambulance service is provided by the Westhampton War Memorial Ambulance Association, located at 3 Hazelwood Ave, Westhampton Beach, New York, 11978. Health care is available at the Peconic Bay Medical Center, located at 201 Montauk Highway, Westhampton Beach, New York, 11798.

*Potential Impacts of Proposed Project* – The proposed project is not anticipated to generate additional demand for emergency services, other than the potential for limited new growth as addressed in Section 3.10.3.

*Proposed Mitigation* – No mitigation is proposed as no significant adverse impacts are anticipated.

**Utilities**

Water

*Existing Conditions* – The Town of Southampton Water District provides water service to the existing uses within the proposed service area.

*Potential Impacts of Proposed Project* – The proposed project would not create additional demand for water within the service area, other than the potential for limited new growth as addressed in Section 3.10.3.

*Proposed Mitigation* – No mitigation is proposed as no significant adverse impacts are anticipated.

Sewage Disposal

*Existing Conditions* – Properties within the proposed sewer district are served by on-site septic systems. Based on the existing flow data obtained from the Suffolk County Water Authority, the 156 parcels within the Phase 1 Service Area have a water consumption rate of approximately 60,000 gallons per day. This equates to an average sanitary flow density of 1,917.5 gpd/acre within the proposed service area. Without wastewater treatment infrastructure in place, Suffolk County Sanitary Code restricts sanitary flow density to 600 gpd/acre in Groundwater Management Zone IV.

*Potential Impacts of Proposed Project* – The installation of a sanitary sewer system will help to reduce wastewater impacts to groundwater, which has been identified as the primary driver behind poor water quality within Moniebogue Bay (as well as the area's surrounding waterbodies).

*Proposed Mitigation* – No mitigation is proposed as no significant adverse impacts are anticipated.

Solid Waste Disposal

*Existing Conditions* – Solid waste is currently generated by the existing uses within the proposed service area.

*Potential Impacts of Proposed Project* – The proposed project would not result in a significant increase in the amount of solid waste generated within the Phase 1 Service Area, other than the potential for limited new growth as addressed in Section 3.10.3.

*Proposed Mitigation* – No mitigation is proposed as no significant adverse impacts are anticipated.

Electricity

*Existing Conditions* – PSEG currently supplies energy to the existing commercial and residential uses within the project area and would continue to provide electricity to the area following the installation of the proposed hybrid sewer system.

*Potential Impacts of Proposed Project* – A slight increase in energy consumption would occur particularly for the operation of the proposed pump stations. In addition, any potential limited new development could require additional energy, as discussed in Section 3.10.3.

*Proposed Mitigation* – Modern energy efficient systems would be incorporated into the design of the pump stations.

# APPENDICES INFORMATION

Appendix A - Full Environmental Assessment Form

Appendix B - Quantifying Nitrogen Loading to/from Village Of Westhampton Beach to Surrounding Water Bodies and Their Mitigation by Creating a Sewer District

# APPENDIX A

# ENVIRONMENTAL ASSESSMENT FORM

## Instructions for Completing Part 1

**Part 1 is to be completed by the applicant or project sponsor.** Responses become part of the application for approval or funding, are subject to public review, and may be subject to further verification.

Complete Part 1 based on information currently available. If additional research or investigation would be needed to fully respond to any item, please answer as thoroughly as possible based on current information; indicate whether missing information does not exist, or is not reasonably available to the sponsor; and, when possible, generally describe work or studies which would be necessary to update or fully develop that information.

Applicants/sponsors must complete all items in Sections A & B. In Sections C, D & E, most items contain an initial question that must be answered either "Yes" or "No". If the answer to the initial question is "Yes", complete the sub-questions that follow. If the answer to the initial question is "No", proceed to the next question. Section F allows the project sponsor to identify and attach any additional information. Section G requires the name and signature of the project sponsor to verify that the information contained in Part 1is accurate and complete.

**A. Project and Sponsor Information.**

| | | |
|---|---|---|
| Name of Action or Project:<br>Village of Westhampton Beach Sewer System | | |
| Project Location (describe, and attach a general location map):<br>Project is centered in the Main Street Commercial District/Moniebogue Bay Watershed, Village of Westhampton Beach, NY (see attached location map) | | |
| Brief Description of Proposed Action (include purpose or need):<br>The proposed project involves the establishment of the Village of Westhampton Beach Sewer System and the installation of sewer infrastructure to serve the Village's Main Street commercial district. The total proposed area to be sewered is approximately 35 acres (total area of the tax parcels within the proposed sewer service area is 31.29 acres) and comprises 89 residential properties and 67 commercial properties. The project would install a combination of gravity and low pressure sewer mains within the 35-acre service area, with two pump stations to pump sewage to the existing Gabreski Airport Sewage Treatment Plant (STP). Modification to the existing STP would be performed within the existing building footprint. Parallel force mains would extend from the two pump stations, along Oak Street, to the Gabreski STP.<br><br>Project area includes he central portion of the Main Street commercial district and spans from just west of Sunset Avenue/Mitchell Road to just east of Mill Avenue/Library Avenue. The northern boundary of the service area is located just north of Main Street with the southern boundary running along Stevens Lane. | | |
| Name of Applicant/Sponsor:<br>Village of Westhampton Beach | Telephone: 631-288-1654<br>E-Mail: info@westhamptonbeach.org | |
| Address: 165 Mill Road | | |
| City/PO: Westhampton Beach | State: New York | Zip Code: 11978 |
| Project Contact (if not same as sponsor; give name and title/role): | Telephone:<br>E-Mail: | |
| Address: | | |
| City/PO: | State: | Zip Code: |
| Property Owner (if not same as sponsor): | Telephone:<br>E-Mail: | |
| Address: | | |
| City/PO: | State: | Zip Code: |

**B. Government Approvals**

**B. Government Approvals, Funding, or Sponsorship.** ("Funding" includes grants, loans, tax relief, and any other forms of financial assistance.)

| Government Entity | If Yes: Identify Agency and Approval(s) Required | Application Date (Actual or projected) |
|---|---|---|
| a. City Council, Town Board, or Village Board of Trustees ☐ Yes ☐ No | Village Board of Trustees - SEQRA determination; DPW - road opening permits | 10/2017 |
| b. City, Town or Village Planning Board or Commission ☐ Yes ☐ No | | |
| c. City Council, Town or Village Zoning Board of Appeals ☐ Yes ☐ No | | |
| d. Other local agencies ☐ Yes ☐ No | Town of Southampton - Town Board; Highway Dept. - road opening permits | TBD |
| e. County agencies ☐ Yes ☐ No | Dept. of Econ. Dev/Plan. - Funding; SCDHS -Eng Design Review, SCPC Referral, DPW - roads | TBD (following SEQRA determination) |
| f. Regional agencies ☐ Yes ☐ No | | |
| g. State agencies ☐ Yes ☐ No | SHPO - (arch/hist); EFC - Funding; DEC - Eng. Design Review; Comptroller - SD ; MTA; NYSDOH | SHPO - in progress. Others - TBD (following SEQRA determination) |
| h. Federal agencies ☐ Yes ☐ No | | |

i. Coastal Resources.

*i.* Is the project site within a Coastal Area, or the waterfront area of a Designated Inland Waterway? ☐ Yes ☐ No

*ii.* Is the project site located in a community with an approved Local Waterfront Revitalization Program? ☐ Yes ☐ No

*iii.* Is the project site within a Coastal Erosion Hazard Area? ☐ Yes ☐ No

**C. Planning and Zoning**

**C.1. Planning and zoning actions.**

Will administrative or legislative adoption, or amendment of a plan, local law, ordinance, rule or regulation be the only approval(s) which must be granted to enable the proposed action to proceed? ☐ Yes ☐ No

- **If Yes,** complete sections C, F and G.
- **If No,** proceed to question C.2 and complete all remaining sections and questions in Part 1

**C.2. Adopted land use plans.**

a. Do any municipally- adopted (city, town, village or county) comprehensive land use plan(s) include the site where the proposed action would be located? ☐ Yes ☐ No

If Yes, does the comprehensive plan include specific recommendations for the site where the proposed action would be located? ☐ Yes ☐ No

b. Is the site of the proposed action within any local or regional special planning district (for example: Greenway Brownfield Opportunity Area (BOA); designated State or Federal heritage area; watershed management plan; or other?) ☐ Yes ☐ No

If Yes, identify the plan(s):

c. Is the proposed action located wholly or partially within an area listed in an adopted municipal open space plan, or an adopted municipal farmland protection plan? ☐ Yes ☐ No

If Yes, identify the plan(s):

Open Space Acquisition Policy Plan for Suffolk County, Town of Southampton Community Preservation Plan

**C.3. Zoning**

a. Is the site of the proposed action located in a municipality with an adopted zoning law or ordinance. ☐ Yes ☐ No
If Yes, what is the zoning classification(s) including any applicable overlay district?
B-1 (Business District 1), HC (Hamlet Commercial) and MF-20 (Multi-Family Residence).

b. Is the use permitted or allowed by a special or conditional use permit? ☐ Yes ☐ No

c. Is a zoning change requested as part of the proposed action? ☐ Yes ☐ No
If Yes,
*i.* What is the proposed new zoning for the site? _____

**C.4. Existing community services.**

a. In what school district is the project site located? Westhampton Beach UFSD

b. What police or other public protection forces serve the project site?
Westhampton Beach Police

c. Which fire protection and emergency medical services serve the project site?
Westhampton Beach Fire District/Westhampton War Memorial Ambulance Association, Inc.

d. What parks serve the project site?
The Great Lawn, Village Marina

**D. Project Details**

**D.1. Proposed and Potential Development**

a. What is the general nature of the proposed action (e.g., residential, industrial, commercial, recreational; if mixed, include all components)? Formation of the Westhampton Beach Sewer District and installation of a sewer system

b. a. Total acreage of the site of the proposed action? 35 acres
b. Total acreage to be physically disturbed? 8 (Phase 1) acres
c. Total acreage (project site and any contiguous properties) owned or controlled by the applicant or project sponsor? N/A acres

**Note: 10+ acres disturbed with potential future Phases 2, 3 & 4**

c. Is the proposed action an expansion of an existing project or use? ☐ Yes ☐ No
*i.* If Yes, what is the approximate percentage of the proposed expansion and identify the units (e.g., acres, miles, housing units, square feet)? % _____ Units: _____

d. Is the proposed action a subdivision, or does it include a subdivision? ☐ Yes ☐ No
If Yes,
*i.* Purpose or type of subdivision? (e.g., residential, industrial, commercial; if mixed, specify types)
_____
*ii.* Is a cluster/conservation layout proposed? ☐ Yes ☐ No
*iii.* Number of lots proposed? _____
*iv.* Minimum and maximum proposed lot sizes? Minimum _____ Maximum _____

e. Will proposed action be constructed in multiple phases? ☐ Yes ☐ No
*i.* If No, anticipated period of construction: _____ months
*ii.* If Yes:
- Total number of phases anticipated 4
- Anticipated commencement date of phase 1 (including demolition) 10 month 2018 year
- Anticipated completion date of final phase TBD month TBD year
- Generally describe connections or relationships among phases, including any contingencies where progress of one phase may determine timing or duration of future phases: _____

This EAF focuses on the formation of the sewer district and the installation of the Phase 1 Service Area. Phase 2 (north of Main Street) and Phase 3 (centered on Montauk Highway/CR 80) have been identified as future sewer service areas within the Village. Phase 4 comprises all tax parcels located within the Village that are not located within the Phase 1, 2 or 3 Service Areas and would be served by innovative advanced on-site nitrogen removal systems. Phases 2, 3 and 4 are contingent upon additional funding and extensive upgrades to the Gabreski STP (or construction of a new facility).

f. Does the project include new residential uses? ☐ Yes ☐ No
If Yes, show numbers of units proposed.

| | One Family | Two Family | Three Family | Multiple Family (four or more) |
|---|---|---|---|---|
| Initial Phase | _____ | _____ | _____ | _____ |
| At completion of all phases | _____ | _____ | _____ | _____ |

g. Does the proposed action include new non-residential construction (including expansions)? ☐ Yes ☐ No
If Yes,
*i.* Total number of structures ____2____
*ii.* Dimensions (in feet) of largest proposed structure: ____TBD____ height; ____TBD____ width; and ____TBD____ length
*iii.* Approximate extent of building space to be heated or cooled: ____N/A (two pump stations)____ square feet

h. Does the proposed action include construction or other activities that will result in the impoundment of any liquids, such as creation of a water supply, reservoir, pond, lake, waste lagoon or other storage? ☐ Yes ☐ No
If Yes,
*i.* Purpose of the impoundment: _____
*ii.* If a water impoundment, the principal source of the water: ☐ Ground water ☐ Surface water streams ☐ Other specify:
_____
*iii.* If other than water, identify the type of impounded/contained liquids and their source.
_____
*iv.* Approximate size of the proposed impoundment. Volume: _____ million gallons; surface area: _____ acres
*v.* Dimensions of the proposed dam or impounding structure: _____ height; _____ length
*vi.* Construction method/materials for the proposed dam or impounding structure (e.g., earth fill, rock, wood, concrete):
_____

**D.2. Project Operations**

a. Does the proposed action include any excavation, mining, or dredging, during construction, operations, or both? ☐ Yes ☐ No
(Not including general site preparation, grading or installation of utilities or foundations where all excavated materials will remain onsite)
If Yes:
*i* .What is the purpose of the excavation or dredging? _____
*ii.* How much material (including rock, earth, sediments, etc.) is proposed to be removed from the site?
- Volume (specify tons or cubic yards): _____
- Over what duration of time? _____

*iii.* Describe nature and characteristics of materials to be excavated or dredged, and plans to use, manage or dispose of them.
_____
_____
*iv.* Will there be onsite dewatering or processing of excavated materials? ☐ Yes ☐ No
If yes, describe. _____
_____
*v.* What is the total area to be dredged or excavated? _____acres
*vi.* What is the maximum area to be worked at any one time? _____ acres
*vii.* What would be the maximum depth of excavation or dredging? _____ feet
*viii.* Will the excavation require blasting? ☐ Yes ☐ No
*ix.* Summarize site reclamation goals and plan: _____
_____
_____

b. Would the proposed action cause or result in alteration of, increase or decrease in size of, or encroachment into any existing wetland, waterbody, shoreline, beach or adjacent area? ☐ Yes ☐ No
If Yes:
*i.* Identify the wetland or waterbody which would be affected (by name, water index number, wetland map number or geographic description): _____
_____

*ii.* Describe how the proposed action would affect that waterbody or wetland, e.g. excavation, fill, placement of structures, or alteration of channels, banks and shorelines. Indicate extent of activities, alterations and additions in square feet or acres:

_____

*iii.* Will proposed action cause or result in disturbance to bottom sediments? ☐ Yes ☐ No

If Yes, describe: _____

*iv.* Will proposed action cause or result in the destruction or removal of aquatic vegetation? ☐ Yes ☐ No

If Yes:

- acres of aquatic vegetation proposed to be removed: _____
- expected acreage of aquatic vegetation remaining after project completion: _____
- purpose of proposed removal (e.g. beach clearing, invasive species control, boat access): _____
- proposed method of plant removal: _____
- if chemical/herbicide treatment will be used, specify product(s): _____

*v.* Describe any proposed reclamation/mitigation following disturbance: _____

c. Will the proposed action use, or create a new demand for water? ☐ Yes ☐ No

If Yes:

*i.* Total anticipated water usage/demand per day: (existing) 60,000 gallons/day

*ii.* Will the proposed action obtain water from an existing public water supply? ☐ Yes ☐ No

If Yes:

- Name of district or service area: Southampton
- Does the existing public water supply have capacity to serve the proposal? ☐ Yes ☐ No
- Is the project site in the existing district? ☐ Yes ☐ No
- Is expansion of the district needed? ☐ Yes ☐ No
- Do existing lines serve the project site? ☐ Yes ☐ No

*iii.* Will line extension within an existing district be necessary to supply the project? ☐ Yes ☐ No

If Yes:

- Describe extensions or capacity expansions proposed to serve this project: _____
- Source(s) of supply for the district: _____

*iv.* Is a new water supply district or service area proposed to be formed to serve the project site? ☐ Yes ☐ No

If, Yes:

- Applicant/sponsor for new district: _____
- Date application submitted or anticipated: _____
- Proposed source(s) of supply for new district: _____

*v.* If a public water supply will not be used, describe plans to provide water supply for the project: _____

*vi.* If water supply will be from wells (public or private), maximum pumping capacity: _____ gallons/minute.

d. Will the proposed action generate liquid wastes? ☐ Yes ☐ No

If Yes:

*i.* Total anticipated liquid waste generation per day: (existing) 60,000 gallons/day **conveyed to STP in-lieu of septic systems**

*ii.* Nature of liquid wastes to be generated (e.g., sanitary wastewater, industrial; if combination, describe all components and approximate volumes or proportions of each): _____

sanitary wastewater

*iii.* Will the proposed action use any existing public wastewater treatment facilities? ☐ Yes ☐ No

If Yes:

- Name of wastewater treatment plant to be used: Gabreski Airport STP
- Name of district: Suffolk County Sewer District No. 24 - Gabreski-Municipal
- Does the existing wastewater treatment plant have capacity to serve the project? ☐ Yes ☐ No
- Is the project site in the existing district? ☐ Yes ☐ No
- Is expansion of the district needed? ☐ Yes ☐ No

**Note: Project seeks to establish new Village Sewer District**

- Do existing sewer lines serve the project site? ☐ Yes ☐ No
- Will line extension within an existing district be necessary to serve the project? ☑ Yes ☐ No

  If Yes:
  - Describe extensions or capacity expansions proposed to serve this project: _____

Line extension would be required to connect the proposed service area to the existing Gabreski STP. Approx. 12,500 LF of parallel 4" pipe would be utilized. STP equipment would be replaced to increase capacity without requiring expansion outside of the footprint of the facility or any additional tankage.

*iv.* Will a new wastewater (sewage) treatment district be formed to serve the project site? ☐ Yes ☐ No

If Yes:
- Applicant/sponsor for new district: Village of Westhampton Beach
- Date application submitted or anticipated: 2018 (anticipated)
- What is the receiving water for the wastewater discharge? Groundwater

*v.* If public facilities will not be used, describe plans to provide wastewater treatment for the project, including specifying proposed receiving water (name and classification if surface discharge, or describe subsurface disposal plans):

Existing Gabreski Airport STP will be utilized.

*vi.* Describe any plans or designs to capture, recycle or reuse liquid waste: _____

N/A

e. Will the proposed action disturb more than one acre and create stormwater runoff, either from new point sources (i.e. ditches, pipes, swales, curbs, gutters or other concentrated flows of stormwater) or non-point source (i.e. sheet flow) during construction or post construction? ☐ Yes ☐ No

**Note: No change in stormwater runoff as all disturbed areas will be restored to prior condition (landscaped or paved)**

If Yes:

*i.* How much impervious surface will the project create in relation to total size of project parcel?

_____ Square feet or 0 acres (impervious surface) **See note above - No increase in impervious surfaces**

_____ Square feet or 35 acres (parcel size) **Size of Proposed Phase 1 Service Area**

*ii.* Describe types of new point sources. None

*iii.* Where will the stormwater runoff be directed (i.e. on-site stormwater management facility/structures, adjacent properties, groundwater, on-site surface water or off-site surface waters)?

Any construction-related stormwater runoff will be managed through provisions outlined in the project's SWPPP. Following construction, no stormwater runoff is anticipated as there will not be an increase in impervious surface/new point sources.

- If to surface waters, identify receiving water bodies or wetlands: _____

  N/A
- Will stormwater runoff flow to adjacent properties? ☐ Yes ☐ No

*iv.* Does proposed plan minimize impervious surfaces, use pervious materials or collect and re-use stormwater? ☐ Yes ☐ No

f. Does the proposed action include, or will it use on-site, one or more sources of air emissions, including fuel combustion, waste incineration, or other processes or operations? ☐ Yes ☐ No

If Yes, identify:

*i.* Mobile sources during project operations (e.g., heavy equipment, fleet or delivery vehicles)

Intermittent deliveries to the sewage treatment plant

*ii.* Stationary sources during construction (e.g., power generation, structural heating, batch plant, crushers)

N/A

*iii.* Stationary sources during operations (e.g., process emissions, large boilers, electric generation)

Wastewater process emissions (hydrogen sulfide likely, methanogenesis is not occurring within the aerobic treatment tanks and sludge holding tanks)

g. Will any air emission sources named in D.2.f (above), require a NY State Air Registration, Air Facility Permit, or Federal Clean Air Act Title IV or Title V Permit? ☐ Yes ☐ No

If Yes:

*i.* Is the project site located in an Air quality non-attainment area? (Area routinely or periodically fails to meet ambient air quality standards for all or some parts of the year) ☐ Yes ☐ No

*ii.* In addition to emissions as calculated in the application, the project will generate:
- _____Tons/year (short tons) of Carbon Dioxide ($CO_2$)
- _____Tons/year (short tons) of Nitrous Oxide ($N_2O$)
- _____Tons/year (short tons) of Perfluorocarbons (PFCs)
- _____Tons/year (short tons) of Sulfur Hexafluoride ($SF_6$)
- _____Tons/year (short tons) of Carbon Dioxide equivalent of Hydroflourocarbons (HFCs)
- _____Tons/year (short tons) of Hazardous Air Pollutants (HAPs)

h. Will the proposed action generate or emit methane (including, but not limited to, sewage treatment plants, landfills, composting facilities)? ☐ Yes ☐ No

If Yes:

*i.* Estimate methane generation in tons/year (metric): _____

*ii.* Describe any methane capture, control or elimination measures included in project design (e.g., combustion to generate heat or electricity, flaring): _____

i. Will the proposed action result in the release of air pollutants from open-air operations or processes, such as quarry or landfill operations? ☐ Yes ☐ No

If Yes: Describe operations and nature of emissions (e.g., diesel exhaust, rock particulates/dust):

_____

j. Will the proposed action result in a substantial increase in traffic above present levels or generate substantial new demand for transportation facilities or services? ☐ Yes ☐ No

If Yes:

*i.* When is the peak traffic expected (Check all that apply): ☐ Morning ☐ Evening ☐ Weekend ☐ Randomly between hours of _____ to _____.

*ii.* For commercial activities only, projected number of semi-trailer truck trips/day: _____

*iii.* Parking spaces: Existing _____ Proposed _____ Net increase/decrease _____

*iv.* Does the proposed action include any shared use parking? ☐ Yes ☐ No

*v.* If the proposed action includes any modification of existing roads, creation of new roads or change in existing access, describe:

_____

*vi.* Are public/private transportation service(s) or facilities available within ½ mile of the proposed site? ☐ Yes ☐ No

*vii* Will the proposed action include access to public transportation or accommodations for use of hybrid, electric or other alternative fueled vehicles? ☐ Yes ☐ No

*viii.* Will the proposed action include plans for pedestrian or bicycle accommodations for connections to existing pedestrian or bicycle routes? ☐ Yes ☐ No

k. Will the proposed action (for commercial or industrial projects only) generate new or additional demand for energy? ☐ Yes ☐ No

If Yes:

*i.* Estimate annual electricity demand during operation of the proposed action: _____

550 kW-hr of electricity per day

*ii.* Anticipated sources/suppliers of electricity for the project (e.g., on-site combustion, on-site renewable, via grid/local utility, or other):

Grid/Local utility (PSEG)

*iii.* Will the proposed action require a new, or an upgrade to, an existing substation? ☐ Yes ☑ No

l. Hours of operation. Answer all items which apply. **Note: All construction will suspended from Memorial Day to Labor Day**

*i.* During Construction:

- Monday - Friday: 7 AM - 6 PM
- Saturday: 8 AM - 5 PM
- Sunday: 8 AM - 5 PM
- Holidays: No Construction Activity

*ii.* During Operations:

- Monday - Friday: 24 hrs/day
- Saturday: 24 hrs/day
- Sunday: 24 hrs/day
- Holidays: 24 hrs/day

m. Will the proposed action produce noise that will exceed existing ambient noise levels during construction, operation, or both? ☐ Yes ☐ No

If yes:

*i.* Provide details including sources, time of day and duration:

Construction activities may temporarily produce noise exceeding existing ambient levels but would be restricted to the hours/seasons specified above.

*ii.* Will proposed action remove existing natural barriers that could act as a noise barrier or screen? ☐ Yes ☐ No

Describe: _____

n.. Will the proposed action have outdoor lighting? ☐ Yes ☐ No

If yes:

*i.* Describe source(s), location(s), height of fixture(s), direction/aim, and proximity to nearest occupied structures:

_____

*ii.* Will proposed action remove existing natural barriers that could act as a light barrier or screen? ☐ Yes ☐ No

Describe: _____

o. Does the proposed action have the potential to produce odors for more than one hour per day? ☐ Yes ☐ No

If Yes, describe possible sources, potential frequency and duration of odor emissions, and proximity to nearest occupied structures: _____

p. Will the proposed action include any bulk storage of petroleum (combined capacity of over 1,100 gallons) or chemical products 185 gallons in above ground storage or any amount in underground storage? ☐ Yes ☐ No

If Yes:

*i.* Product(s) to be stored _____

*ii.* Volume(s) _____ per unit time _____ (e.g., month, year)

*iii.* Generally describe proposed storage facilities: _____

q. Will the proposed action (commercial, industrial and recreational projects only) use pesticides (i.e., herbicides, insecticides) during construction or operation? ☐ Yes ☐ No

If Yes:

*i.* Describe proposed treatment(s):

_____

*ii.* Will the proposed action use Integrated Pest Management Practices? ☐ Yes ☐ No

r. Will the proposed action (commercial or industrial projects only) involve or require the management or disposal of solid waste (excluding hazardous materials)? ☐ Yes ☐ No

If Yes:

*i.* Describe any solid waste(s) to be generated during construction or operation of the facility:

- Construction: _____ tons per _____ (unit of time)
- Operation : _____ tons per _____ (unit of time)

*ii.* Describe any proposals for on-site minimization, recycling or reuse of materials to avoid disposal as solid waste:

- Construction: _____
- Operation: _____

*iii.* Proposed disposal methods/facilities for solid waste generated on-site:

- Construction: _____
- Operation: _____

s. Does the proposed action include construction or modification of a solid waste management facility? ☐ Yes ☐ No

If Yes:

*i.* Type of management or handling of waste proposed for the site (e.g., recycling or transfer station, composting, landfill, or other disposal activities): _____

*ii.* Anticipated rate of disposal/processing:

- _____ Tons/month, if transfer or other non-combustion/thermal treatment, or
- _____ Tons/hour, if combustion or thermal treatment

*iii.* If landfill, anticipated site life: _____ years

t. Will proposed action at the site involve the commercial generation, treatment, storage, or disposal of hazardous waste? ☐ Yes ☐ No

If Yes:

*i.* Name(s) of all hazardous wastes or constituents to be generated, handled or managed at facility: _____

*ii.* Generally describe processes or activities involving hazardous wastes or constituents: _____

*iii.* Specify amount to be handled or generated _____ tons/month

*iv.* Describe any proposals for on-site minimization, recycling or reuse of hazardous constituents: _____

*v.* Will any hazardous wastes be disposed at an existing offsite hazardous waste facility? ☐ Yes ☐ No

If Yes: provide name and location of facility: _____

If No: describe proposed management of any hazardous wastes which will not be sent to a hazardous waste facility: _____

**E. Site and Setting of Proposed Action**

**E.1. Land uses on and surrounding the project site**

a. Existing land uses.

*i.* Check all uses that occur on, adjoining and near the project site.

☐ Urban ☐ Industrial ☑ Commercial ☑ Residential (suburban) ☐ Rural (non-farm)
☐ Forest ☐ Agriculture ☐ Aquatic ☐ Other (specify): _____

*ii.* If mix of uses, generally describe:

Phase 1 project area includes the Main Street commercial district and includes 89 residential properties and 67 commercial properties.

b. Land uses and covertypes on the project site.

| Land use or Covertype | Current Acreage | Acreage After Project Completion | Change (Acres +/-) |
|---|---|---|---|
| • Roads, buildings, and other paved or impervious surfaces | 8 (Phase 1); 10+ (Ph. 2, 3 & 4) | 8 (Phase 1);10+ (Ph. 2, 3 & 4) | 0 |
| • Forested | | | |
| • Meadows, grasslands or brushlands (non-agricultural, including abandoned agricultural) | | | |
| • Agricultural (includes active orchards, field, greenhouse etc.) | | | |
| • Surface water features (lakes, ponds, streams, rivers, etc.) | | | |
| • Wetlands (freshwater or tidal) | | | |
| • Non-vegetated (bare rock, earth or fill) | | | |
| • Other Describe: Landscaped Area | | | |

c. Is the project site presently used by members of the community for public recreation? ☐ Yes ☐ No

*i.* If Yes: explain: The Great Lawn and Village Marina are located just outside of the proposed service area. Water quality at Marina will improve.

d. Are there any facilities serving children, the elderly, people with disabilities (e.g., schools, hospitals, licensed day care centers, or group homes) within 1500 feet of the project site? ☐ Yes ☐ No

If Yes,

*i.* Identify Facilities:

Family Counseling Services (40 Main St. Westhampton Beach, NY)

e. Does the project site contain an existing dam? ☐ Yes ☐ No

If Yes:

*i.* Dimensions of the dam and impoundment:

- Dam height: _____ feet
- Dam length: _____ feet
- Surface area: _____ acres
- Volume impounded: _____ gallons OR acre-feet

*ii.* Dam's existing hazard classification: _____

*iii.* Provide date and summarize results of last inspection:

_____

f. Has the project site ever been used as a municipal, commercial or industrial solid waste management facility, or does the project site adjoin property which is now, or was at one time, used as a solid waste management facility? ☐ Yes ☐ No

If Yes:

*i.* Has the facility been formally closed? ☐ Yes ☐ No

- If yes, cite sources/documentation: _____

*ii.* Describe the location of the project site relative to the boundaries of the solid waste management facility:

_____

*iii.* Describe any development constraints due to the prior solid waste activities: _____

g. Have hazardous wastes been generated, treated and/or disposed of at the site, or does the project site adjoin property which is now or was at one time used to commercially treat, store and/or dispose of hazardous waste? ☐ Yes ☐ No

If Yes:

*i.* Describe waste(s) handled and waste management activities, including approximate time when activities occurred:

_____

h. Potential contamination history. Has there been a reported spill at the proposed project site, or have any remedial actions been conducted at or adjacent to the proposed site? ☐ Yes ☐ No

If Yes:

*i.* Is any portion of the site listed on the NYSDEC Spills Incidents database or Environmental Site Remediation database? Check all that apply: ☐ Yes ☐ No

☐ Yes – Spills Incidents database Provide DEC ID number(s): _____

☐ Yes – Environmental Site Remediation database Provide DEC ID number(s): _____

☐ Neither database

*ii.* If site has been subject of RCRA corrective activities, describe control measures: _____

*iii.* Is the project within 2000 feet of any site in the NYSDEC Environmental Site Remediation database? ☐ Yes ☐ No

If yes, provide DEC ID number(s): _____

*iv.* If yes to (i), (ii) or (iii) above, describe current status of site(s):

_____

*v.* Is the project site subject to an institutional control limiting property uses? ☐ Yes ☐ No

- If yes, DEC site ID number: _____
- Describe the type of institutional control (e.g., deed restriction or easement): _____
- Describe any use limitations: _____
- Describe any engineering controls: _____
- Will the project affect the institutional or engineering controls in place? ☐ Yes ☐ No
- Explain: _____

**E.2. Natural Resources On or Near Project Site**

a. What is the average depth to bedrock on the project site? Greater than 100 feet

b. Are there bedrock outcroppings on the project site? ☐ Yes ☐ No
If Yes, what proportion of the site is comprised of bedrock outcroppings? _____%

c. Predominant soil type(s) present on project site:

| | |
|---|---|
| Riverhead sandy loam, 0-3% (RdA) | 89 % |
| Cut & fill land, gently sloping (CuB) | 9 % |
| | % |

d. What is the average depth to the water table on the project site? Average: 6 feet

e. Drainage status of project site soils:
- ☑ Well Drained: 100 % of site
- ☐ Moderately Well Drained: _____% of site
- ☐ Poorly Drained _____% of site

f. Approximate proportion of proposed action site with slopes:
- ☑ 0-10%: 95 % of site
- ☑ 10-15%: 3 % of site
- ☑ 15% or greater: 2 % of site

g. Are there any unique geologic features on the project site? ☐ Yes ☐ No
If Yes, describe: _____

h. Surface water features.

*i.* Does any portion of the project site contain wetlands or other waterbodies (including streams, rivers, ponds or lakes)? ☐ Yes ☐ No

*ii.* Do any wetlands or other waterbodies adjoin the project site? **Note: No construction in these areas** ☐ Yes ☐ No

If Yes to either *i* or *ii*, continue. If No, skip to E.2.i.

*iii.* Are any of the wetlands or waterbodies within or adjoining the project site regulated by any federal, state or local agency? ☐ Yes ☐ No

*iv.* For each identified regulated wetland and waterbody on the project site, provide the following information:

- Streams: Name 923-66 Classification SC
- Lakes or Ponds: Name _____ Classification _____
- Wetlands: Name Federal Waters Approximate Size Tidal Wetlands (LZ)
- Wetland No. (if regulated by DEC) _____

*v.* Are any of the above water bodies listed in the most recent compilation of NYS water quality-impaired waterbodies? ☐ Yes ☐ No

If yes, name of impaired water body/bodies and basis for listing as impaired: _____
Name - Pollutants - Uses:Quantuck Canal/Moneybogue Bay – Pathogens – Shellfishing

i. Is the project site in a designated Floodway? ☐ Yes ☐ No

j. Is the project site in the 100 year Floodplain? ☐ Yes ☐ No

k. Is the project site in the 500 year Floodplain? ☐ Yes ☐ No

l. Is the project site located over, or immediately adjoining, a primary, principal or sole source aquifer? ☐ Yes ☐ No
If Yes:

*i.* Name of aquifer: Sole Source Aquifer Names:Nassau-Suffolk SSA

m. Identify the predominant wildlife species that occupy or use the project site: _____
N/A - Project Area nearly fully developed _____ _____
_____ _____ _____

n. Does the project site contain a designated significant natural community? ☐ Yes ☐ No
If Yes:
*i.* Describe the habitat/community (composition, function, and basis for designation): _____
Marine Eelgrass Meadow
*ii.* Source(s) of description or evaluation: NYS DEC
*iii.* Extent of community/habitat:
- Currently: 1597.81 acres
- Following completion of project as proposed: 1597.81 acres **Note: No construction in this area**
- Gain or loss (indicate + or -): 0 acres

o. Does project site contain any species of plant or animal that is listed by the federal government or NYS as endangered or threatened, or does it contain any areas identified as habitat for an endangered or threatened species? ☐ Yes ☐ No

p. Does the project site contain any species of plant or animal that is listed by NYS as rare, or as a species of special concern? ☐ Yes ☐ No

q. Is the project site or adjoining area currently used for hunting, trapping, fishing or shell fishing? ☐ Yes ☐ No
If yes, give a brief description of how the proposed action may affect that use: _____
Moniebogue Bay has historically been used for fishing/shellfishing but suffers from chronic pollution (classified as impaired by NYS DEC). Proposed action will significantly reduce nitrogen loading associated with wastewater, which is the largest contributor to poor water quality in Moniebogue Bay.

**E.3. Designated Public Resources On or Near Project Site**

a. Is the project site, or any portion of it, located in a designated agricultural district certified pursuant to Agriculture and Markets Law, Article 25-AA, Section 303 and 304? ☐ Yes ☐ No
If Yes, provide county plus district name/number: _____

b. Are agricultural lands consisting of highly productive soils present? ☐ Yes ☐ No
*i.* If Yes: acreage(s) on project site? _____
*ii.* Source(s) of soil rating(s): _____

c. Does the project site contain all or part of, or is it substantially contiguous to, a registered National Natural Landmark? ☐ Yes ☐ No
If Yes:
*i.* Nature of the natural landmark: ☐ Biological Community ☐ Geological Feature
*ii.* Provide brief description of landmark, including values behind designation and approximate size/extent: _____
_____
_____

d. Is the project site located in or does it adjoin a state listed Critical Environmental Area? ☐ Yes ☐ No
If Yes:
*i.* CEA name: _____
*ii.* Basis for designation: _____
*iii.* Designating agency and date: _____

e. Does the project site contain, or is it substantially contiguous to, a building, archaeological site, or district which is listed on, or has been nominated by the NYS Board of Historic Preservation for inclusion on, the State or National Register of Historic Places? ☐ Yes ☐ No

**Note: Historic Resources are located outside of project area**

If Yes:

*i.* Nature of historic/archaeological resource: ☐ Archaeological Site ☑ Historic Building or District

*ii.* Name: US Post Office--Westhampton Beach, Foster-Meeker House

*iii.* Brief description of attributes on which listing is based:

Post Office - Colonial Revival Arch./WPA Project, Foster-Meeker House - 1735 shingled Cape-Cod residence.

f. Is the project site, or any portion of it, located in or adjacent to an area designated as sensitive for archaeological sites on the NY State Historic Preservation Office (SHPO) archaeological site inventory? ☐ Yes ☐ No

g. Have additional archaeological or historic site(s) or resources been identified on the project site? ☐ Yes ☐ No

If Yes:

*i.* Describe possible resource(s): _____

*ii.* Basis for identification: _____

h. Is the project site within fives miles of any officially designated and publicly accessible federal, state, or local scenic or aesthetic resource? ☐ Yes ☐ No

If Yes:

*i.* Identify resource: The Great Lawn, Village Marina/Moniebogue Bay

*ii.* Nature of, or basis for, designation (e.g., established highway overlook, state or local park, state historic trail or scenic byway, etc.): Local Parks/Recreational Facilities

*iii.* Distance between project and resource: 0.10 miles.

i. Is the project site located within a designated river corridor under the Wild, Scenic and Recreational Rivers Program 6 NYCRR 666? ☐ Yes ☐ No

If Yes:

*i.* Identify the name of the river and its designation: _____

*ii.* Is the activity consistent with development restrictions contained in 6NYCRR Part 666? ☐ Yes ☐ No

**F. Additional Information**

Attach any additional information which may be needed to clarify your project.

If you have identified any adverse impacts which could be associated with your proposal, please describe those impacts plus any measures which you propose to avoid or minimize them.

**G. Verification**

I certify that the information provided is true to the best of my knowledge.

Applicant/Sponsor Name David Tepper Date 9/29/2017

Signature David Tepper Title Planner, AICP (Cameron Engineering & Associates, LLP)

PRINT FORM

# APPENDIX G

SHPO Letter

NEW YORK STATE OF OPPORTUNITY. | Parks, Recreation, and Historic Preservation

**ANDREW M. CUOMO**
Governor

**ROSE HARVEY**
Commissioner

October 13, 2017

Mr. Anthony Pasca
Village Attorney
Village of Westhampton Beach
165 Mill Road
Westhampton Beach, NY 11978

Re: DEC
Village of Westhampton Beach Sewer System
Glovers Lane at Main Street, Westhampton Beach, NY
17PR06335

Dear Mr. Pasca:

Thank you for requesting the comments of the Division for Historic Preservation of the Office of Parks, Recreation and Historic Preservation (OPRHP). We have reviewed the submitted materials in accordance with the New York State Historic Preservation Act of 1980 (section 14.09 of the New York Parks, Recreation and Historic Preservation Law). These comments are those of the Division for Historic Preservation and relate only to Historic/Cultural resources. They do not include potential environmental impacts to New York State Parkland that may be involved in or near your project. Such impacts must be considered as part of the environmental review of the project pursuant to the State Environmental Quality Review Act (New York Environmental Conservation Law Article 8) and its implementing regulations (6NYCRR Part 617).

We note that the U.S. Post office on Main Street is listed on the State and National Registers of Historic Places and that St. Mark's Church at 40 Main Street is eligible for listing on the State and National Register of Historic Places. Both properties appear to be near the proposed Sewer System. As such, we ask that care be taken for any work at or near these historic structures.

Based upon the project description and area of potential effect, it is OPHRP's opinion that eh proposed work will have No Adverse Impact upon historic resources. If the propose work will involve the two noted historic properties, consultation with our office should resume.

If you have any questions, I can be reached at 518-268-2181.

Sincerely,

Beth A. Cumming
Senior Historic Site Restoration Coordinator
e-mail: beth.cumming@parks.ny.gov

via e-mail only

cc: D. Tepper, N. Bono

**H2M architects + engineers**
538 Broad Hollow Rd, 4th Floor East, Melville, NY 11747
tel 631.756.8000 fax 631.694.4122
www.h2m.com

# EXHIBIT D

SCSA Resolution 51-2017

# SUFFOLK COUNTY SEWER AGENCY

## RESOLUTION NO. 51 - 2017

### GRANTING FORMAL APPROVAL
### FOR THE CONNECTION OF THE
### VILLAGE OF WESTHAMPTON BEACH (SH-1687)
### TO SUFFOLK COUNTY SEWER DISTRICT NO. 24 – GABRESKI MUNICIPAL

WHEREAS, the Village of Westhampton Beach is an existing business district, located in the Town of Southampton, New York, situated on property identified on the Suffolk County Tax Map as District 0905, Section 011.00, Block 01.00, Lots 001.000 through District 0905, Section 011.00, Block 03.00, Lot 005.000 and District 0905, Section 012.00, Block 03.00, Lots 015.000 through District 0905, Section 012.00, Block 04.00, Lot 052.000, and

WHEREAS, the parcels are not located within the boundaries of Suffolk County Sewer District No. 24 – Gabreski Municipal (the "District"), or within the boundaries of any other municipal sewer district, and

WHEREAS, the Village of Westhampton Beach (the "Village") received a Conceptual Certification from this Agency on August 21, 2017 (Resolution 43-2017) to connect Sixty Thousand gallons per day (60,000 GPD) to the sanitary sewerage facilities of the District, and

WHEREAS, for the proposed flow of Sixty Thousand Gallons per day (60,000 GPD), the District's sewage treatment plant currently has Ten Thousand gallons per day (10,000 GPD) of available capacity and will require modifications to the treatment plant to accept the additional Fifty Thousand Gallons per day (50,000 GPD) of sewage from the Village of Westhampton Beach, and

WHEREAS, the connection fee for the proposed flow of 60,000 GPD will be used by the District to offset the cost of the future modifications to the District's sewage treatment plant required to create the additional 50,000 GPD of District's capacity, and

WHEREAS, the connection of the Village of Westhampton Beach to the District will be financially beneficial to the District, and environmentally beneficial to Suffolk County, and

WHEREAS, pursuant to Title 6 NYCRR Part 617.5(c) (11) and (20), this project involves the extension of utility distribution facilities, including gas, electric, telephone, cable, water and sewer connections to render service in approved subdivisions or in connection with any action on this list; and routine or continuing agency administration and management, not including new programs or major reordering of priorities that may affect the environment. No further action under SEQRA should be taken by the Sewer Agency,

NOW, THEREFORE, IT IS

1st RESOLVED, that SEQRA requirements for this project have been met, and the Board of Trustees of the Village of Westhampton Beach has adopted a resolution establishing the action as Type 1 with negative declaration under SEQRA, and requires no further action, now, therefore, be it further

2nd RESOLVED, that the Village of Westhampton Beach be permitted to connect to the sanitary sewerage facilities of the District, upon such terms and conditions as the Administrative Head of the District may impose, subject to the terms and conditions hereof, and it is further

3rd RESOLVED, that Sixty Thousand gallons per day (60,000 GPD) of capacity in the District's sewage treatment plant be allocated to the Village of Westhampton Beach, and it is further

4th RESOLVED, that the connection authorized herein is subject to the approval of the Suffolk County Legislature and the New York State Department of Environmental Conservation, and it is further

5th RESOLVED, that the connection authorized herein is subject to the execution of an agreement (the "Connection Agreement") between the Village of Westhampton Beach, the District, the Suffolk County Department of Public Works ("DPW"), the Suffolk County Department of Health Services, the County of Suffolk, and this Agency, which agreement shall contain such terms and conditions as the Administrative Head of the District shall determine, and it is further

6th RESOLVED, that the connection fee to be paid by the Village of Westhampton Beach shall be paid upon the execution of the Connection Agreement at the rate of $30.00 per gallon of flow per day for a total of One Million Eight Hundred Thousand Dollars ($1,800,000.00), and it is further

7th RESOLVED, that if the cost of the future modifications to the District's sewage treatment plant required to create the additional 50,000 GPD of District's capacity exceeds the aforementioned amount of connection fee to be paid by the Village of Westhampton Beach (i.e., $1,800,000.00), the Village will be required to pay the difference, and it is further

8th RESOLVED, that the Village shall, at his sole cost, expense and effort, construct a sewage collection facility for the Village of Westhampton Beach and shall offer to dedicate the said facility to this Agency, or to this Agency's nominee, at no charge, and it is further

9th RESOLVED, that the Village shall furnish a Letter of Credit, in form, wording and amount, and on such terms and conditions, as determined by this Agency's staff, as security for the construction of the sewage collection facility for the Village of Westhampton Beach, as well as for all of the Village's obligations under the Connection Agreement, and it is further

10th RESOLVED, that this resolution shall become null and void, and of no further force or effect, without any further action by this Agency or notice to the Village of Westhampton Beach if, within one (1) year from the date of the adoption hereof, an agreement in furtherance of the authorization granted herein (the Connection Agreement), in form and content satisfactory to the Chairman of this Agency, has not been negotiated and fully executed by all parties thereto.

(Suffolk County Sewer Agency Meeting December 18, 2017)

# APPENDIX A

Inc. Village of Westhampton Beach Audited Financial Report

# APPENDIX B

Collection System Equipment Cuts

# NP 3153 HT 3~ 454

## Technical specification

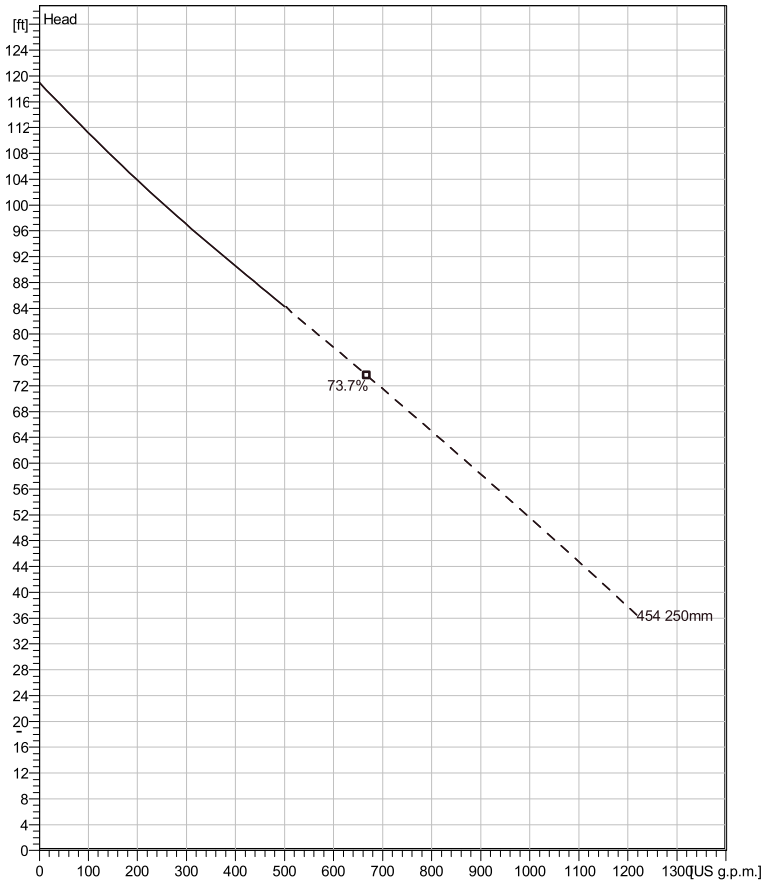


*Water, pure* *Curve ISO*

*Note: Picture might not correspond to the current configuration.*

### General

Patented self cleaning semi-open channel impeller, ideal for pumping in waste water applications. Possible to be upgraded with Guide-pin® for even better clogging resistance. Modular based design with high adaptation grade.

### Impeller

| | |
|---|---|
| Impeller material | Stainless steel |
| Discharge Flange Diameter | 3 15/16 inch |
| Suction Flange Diameter | 3 15/16 inch |
| Impeller diameter | 250 mm |
| Number of blades | 2 |

### Motor

| | |
|---|---|
| Motor # | N3153.660 21-15-4AA-W 15hp Standard |
| Stator variant | 4 |
| Frequency | 60 Hz |
| Rated voltage | 200 V |
| Number of poles | 4 |
| Phases | 3~ |
| Rated power | 15 hp |
| Rated current | 44 A |
| Starting current | 246 A |
| Rated speed | 1755 rpm |
| Power factor | |
| 1/1 Load | 0.85 |
| 3/4 Load | 0.80 |
| 1/2 Load | 0.70 |
| Motor efficiency | |
| 1/1 Load | 87.2 % |
| 3/4 Load | 88.6 % |
| 1/2 Load | 88.6 % |

### Configuration

**Installation: P - Semi permanent, Wet**

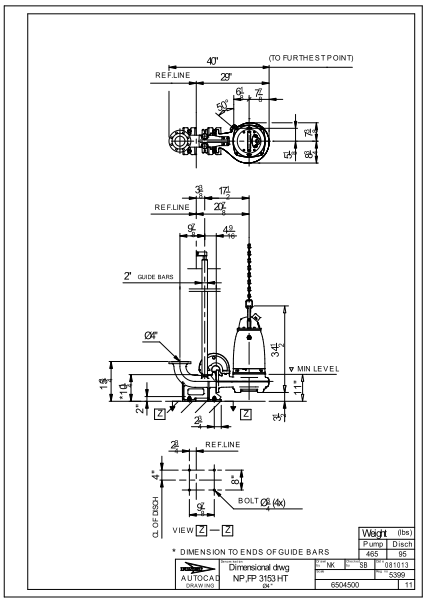


| Project | Project ID | Created by | Created on | Last update |
|---|---|---|---|---|
| | | | 7/6/2018 | |

# NP 3153 HT 3~ 454

## Performance curve

### Pump

| | |
|---|---|
| Discharge Flange Diameter | 3 15/16 inch |
| Suction Flange Diameter | 100 mm |
| Impeller diameter | $9^{13}/_{16}$" |
| Number of blades | 2 |

### Motor

| | |
|---|---|
| Motor # | N3153.660 21-15-4AA-W 15hp |
| Stator variant | 4 |
| Frequency | 60 Hz |
| Rated voltage | 200 V |
| Number of poles | 4 |
| Phases | 3~ |
| Rated power | 15 hp |
| Rated current | 44 A |
| Starting current | 246 A |
| Rated speed | 1755 rpm |

| Power factor | |
|---|---|
| 1/1 Load | 0.85 |
| 3/4 Load | 0.80 |
| 1/2 Load | 0.70 |

| Motor efficiency | |
|---|---|
| 1/1 Load | 87.2 % |
| 3/4 Load | 88.6 % |
| 1/2 Load | 88.6 % |

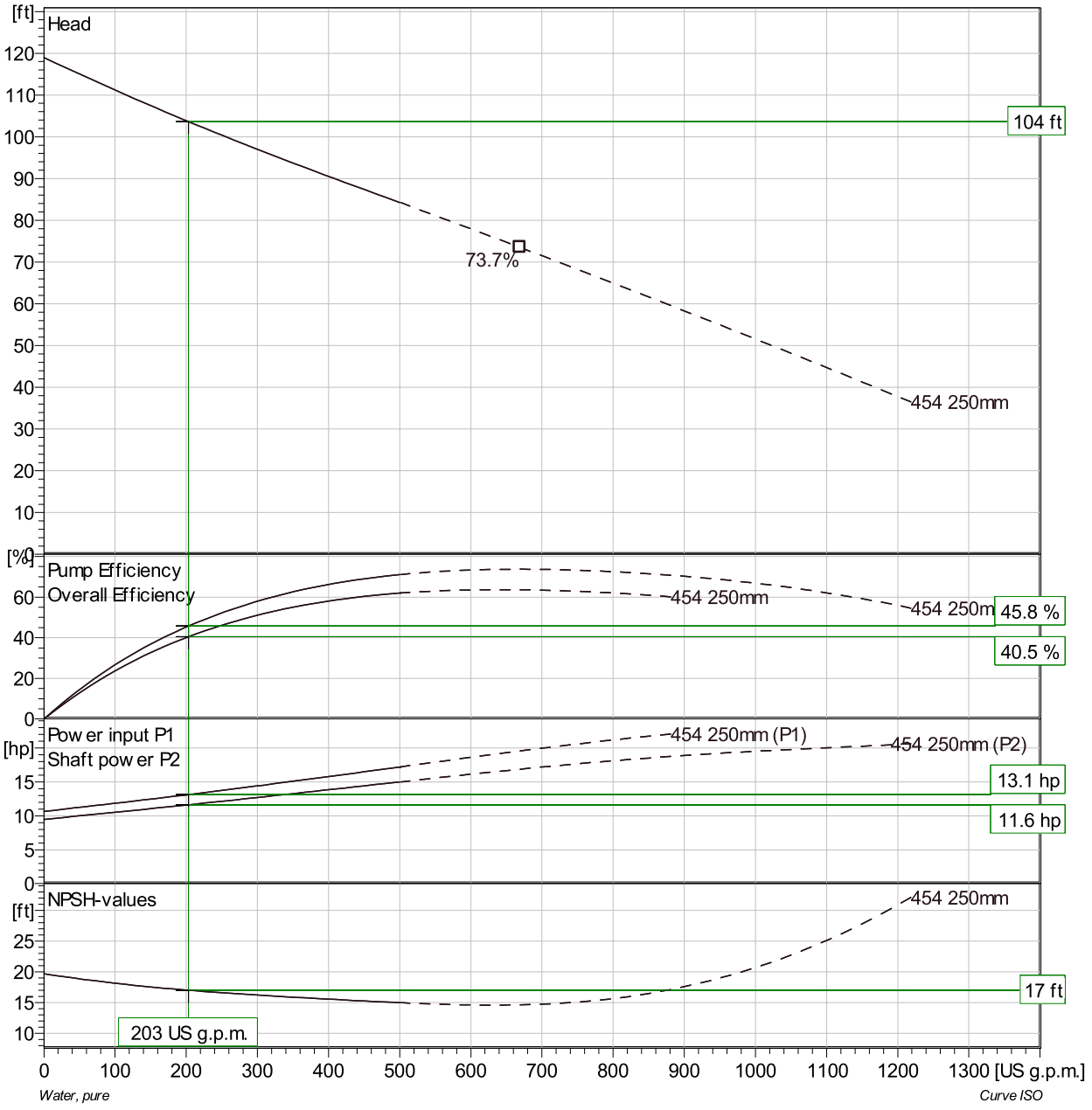


| Project | Project ID | Created by | Created on | Last update |
|---|---|---|---|---|
| | | | 7/6/2018 | |

# NP 3153 HT 3~ 454

## Duty Analysis

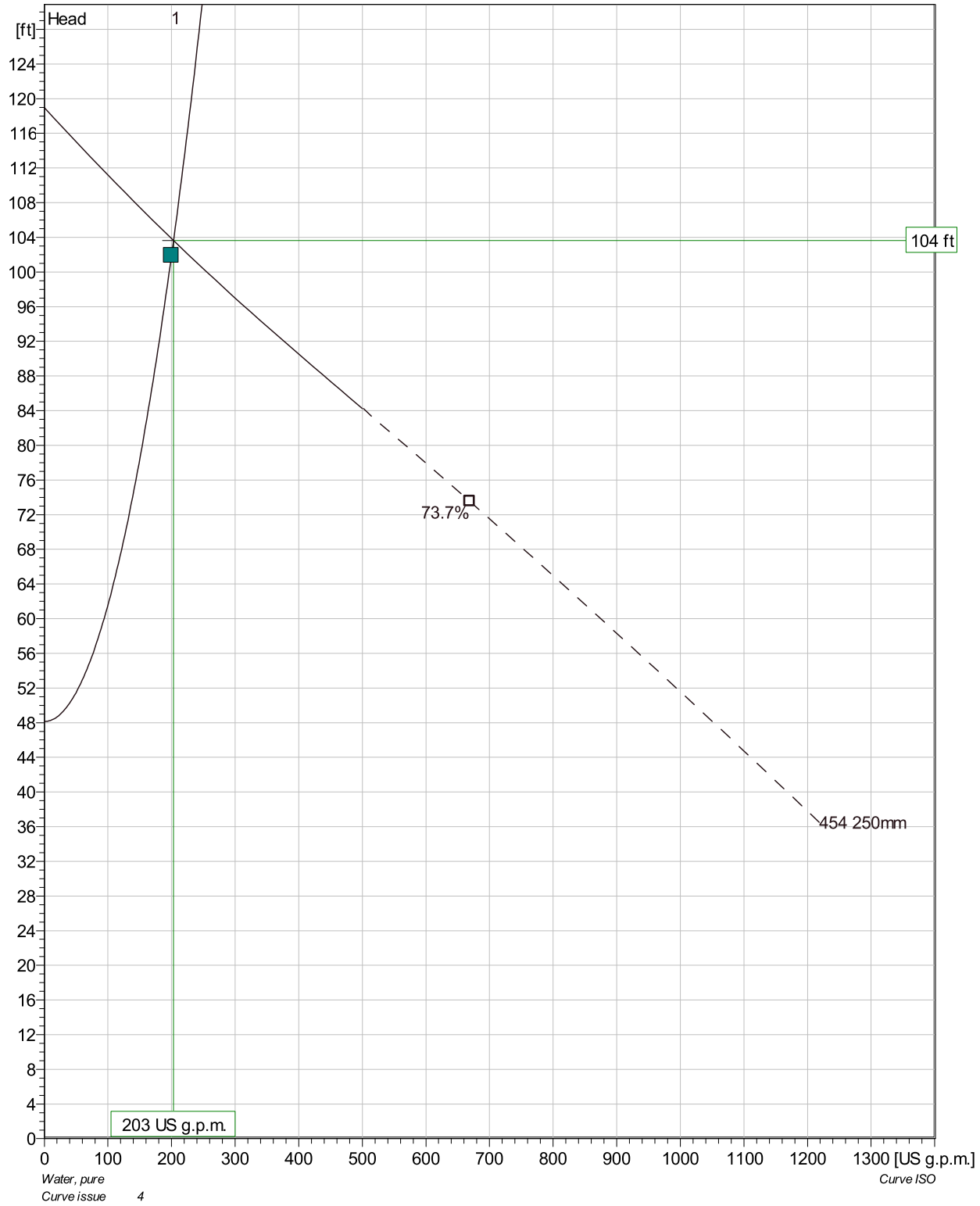


| Pumps running /System | Individual pump Flow | Head | Shaft power | Total Flow | Head | Shaft power | Pump eff. | Specific energy | NPSHre |
|---|---|---|---|---|---|---|---|---|---|
| 1 | 203 US g.p.m. | 104 ft | 11.6 hp | 203 US g.p.m. | 104 ft | 11.6 hp | 45.8 % | 804 kWh/US MG | 17 ft |

| Project | Project ID | Created by | Created on | Last update |
|---|---|---|---|---|
| | | | 7/6/2018 | |

# NP 3153 HT 3~ 454

## VFD Curve

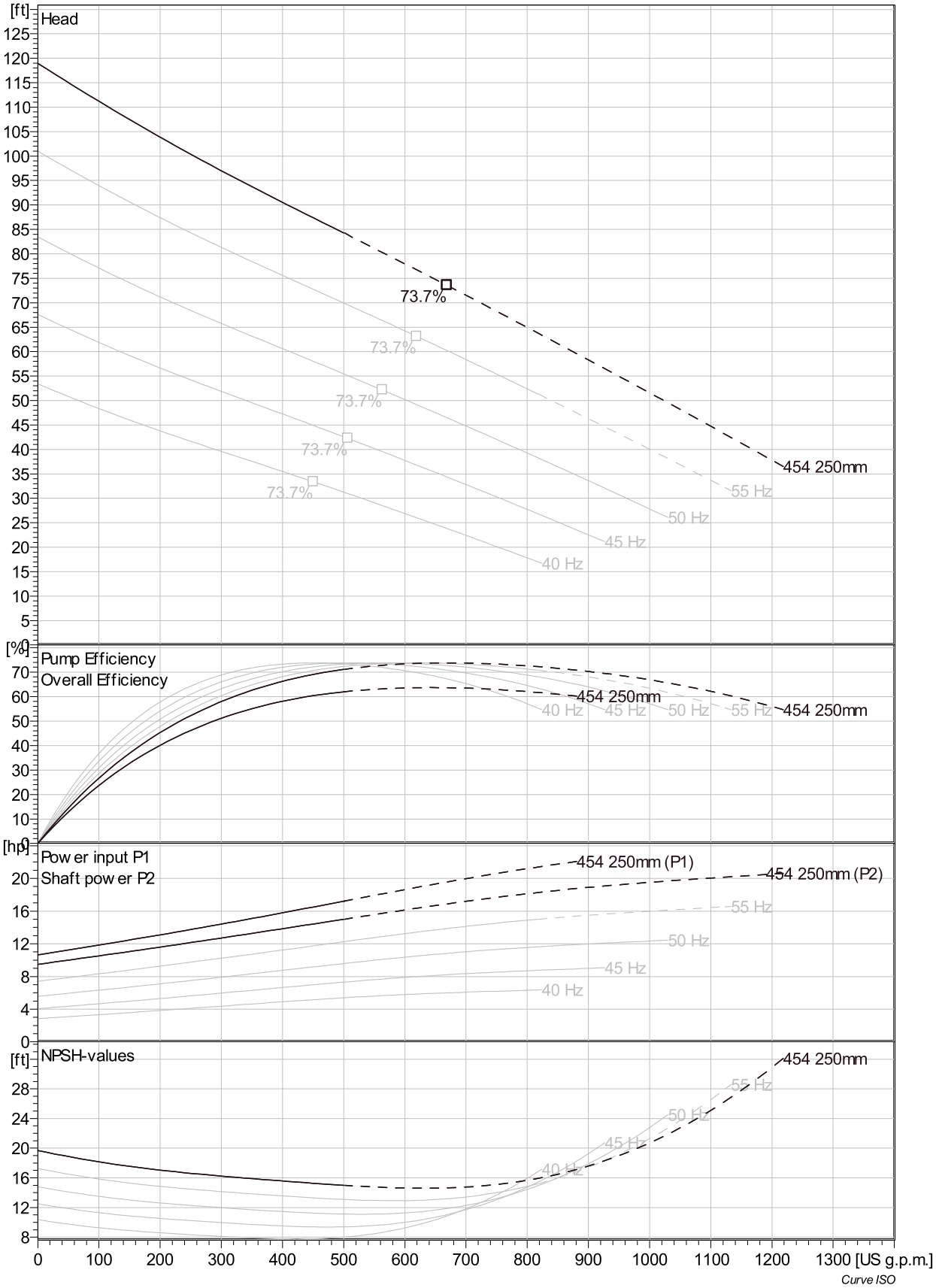


| Project | Project ID | Created by | Created on | Last update |
|---|---|---|---|---|
| | | | 7/6/2018 | |

# NP 3153 HT 3~ 454

## VFD Analysis

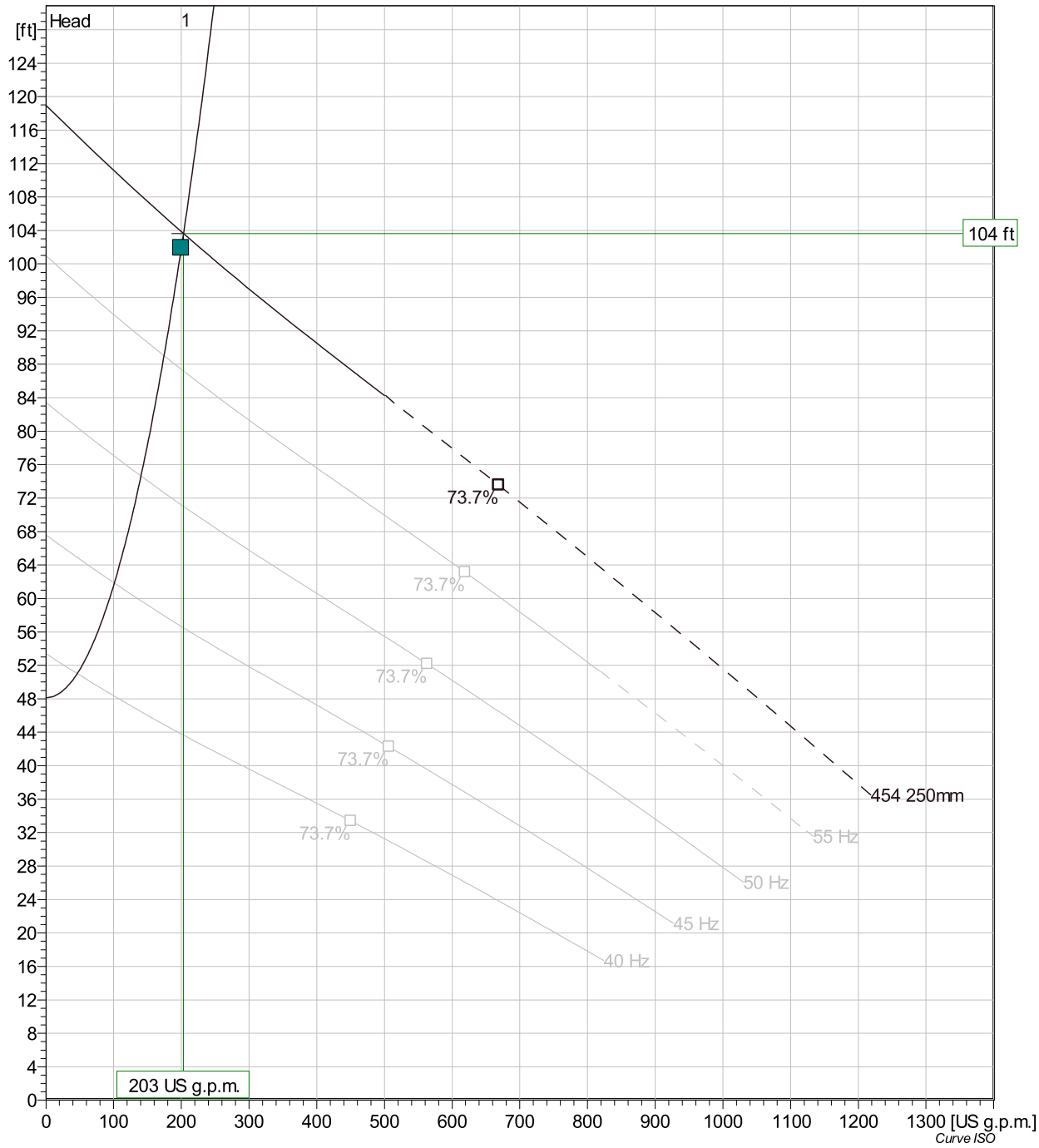


| Pumps running /System | Frequency | Flow | Head | Shaft power | Flow | Head | Shaft power | Hyd eff. | Specific energy | NPSHre |
|---|---|---|---|---|---|---|---|---|---|---|
| 1 | 59.7 Hz | 203 US g.p.m. | 104 ft | 11.6 hp | 203 US g.p.m. | 104 ft | 11.6 hp | 45.8 % | 804 kWh/US MG | 17 ft |
| 1 | 55 Hz | 174 US g.p.m. | 89 ft | 9.01 hp | 174 US g.p.m. | 89 ft | 9.01 hp | 43.6 % | 723 kWh/US MG | 15.1 ft |
| 1 | 50 Hz | 140 US g.p.m. | 74.7 ft | 6.63 hp | 140 US g.p.m. | 74.7 ft | 6.63 hp | 40 % | 665 kWh/US MG | 13.1 ft |
| 1 | 45 Hz | 101 US g.p.m. | 61.8 ft | 4.68 hp | 101 US g.p.m. | 61.8 ft | 4.68 hp | 33.8 % | 666 kWh/US MG | 11.3 ft |
| 1 | 40 Hz | 46.4 US g.p.m. | 51 ft | 3.07 hp | 46.4 US g.p.m. | 51 ft | 3.07 hp | 19.5 % | 1000 kWh/US MG | 9.8 ft |

| Project | Project ID | Created by | Created on | Last update |
|---|---|---|---|---|
| | | | 7/6/2018 | |

# NP 3153 HT 3~ 454

## Dimensional drawing

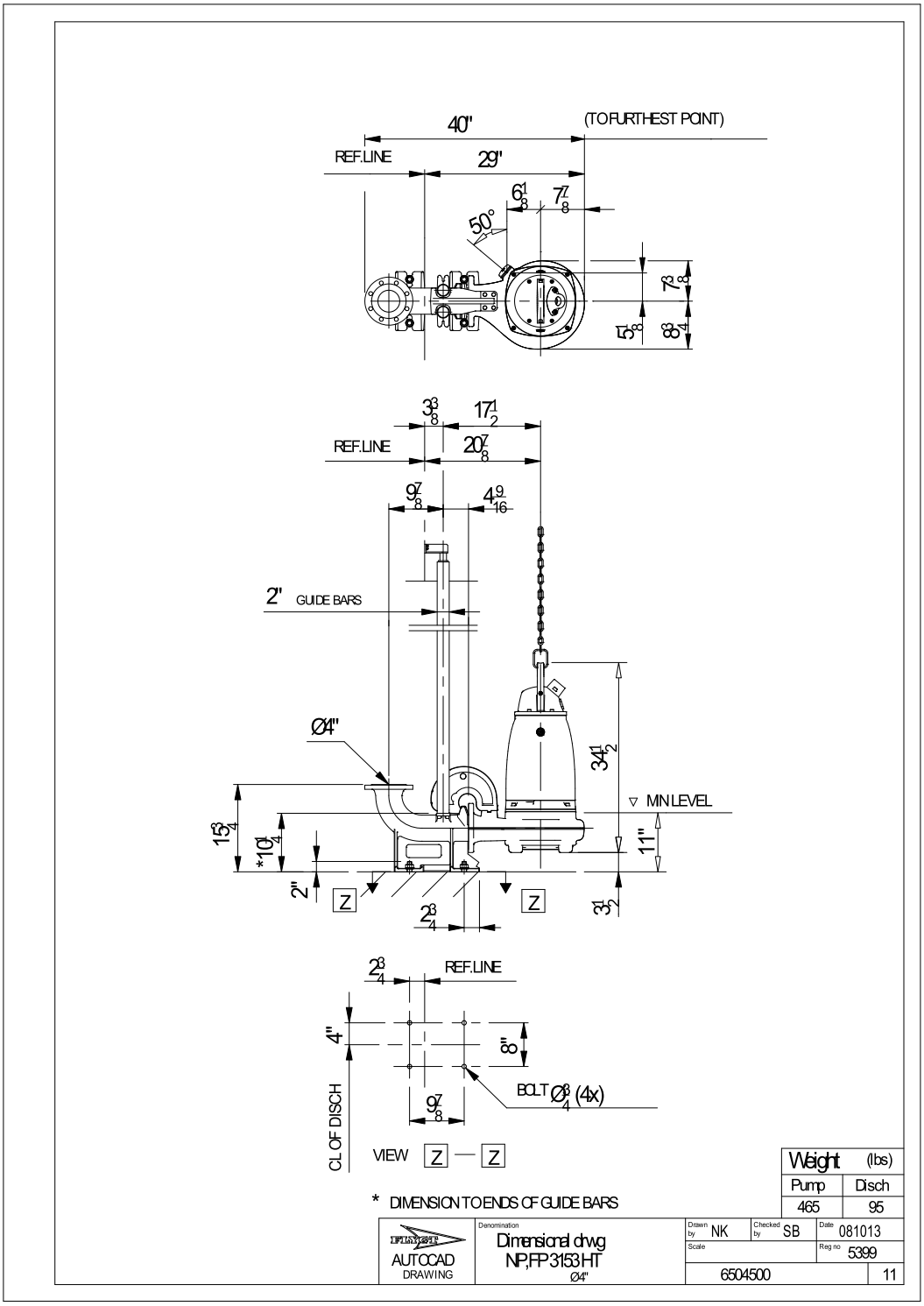


| Project | Project ID | Created by | Created on | Last update |
|---|---|---|---|---|
| | | | 7/6/2018 | |

# NP 3153 HT 3~ 454

## Life cycle costs (LCC)

| | | | |
|---|---|---|---|
| Total lifetime | 15 | Inflation rate (rate of price increases) | 2 % |
| Annual operating time | 5600 | Interest rate (for investment) | 3 % |
| Energy cost per kWh | 0.00 USD | | |
| Power input P1 | | | |

### Total costs

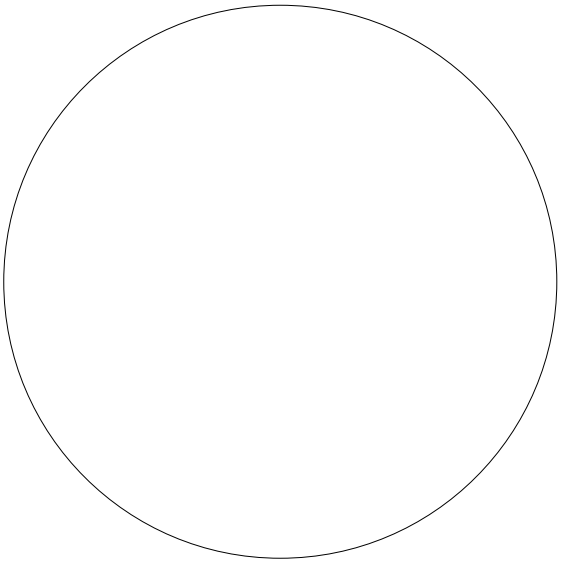

**0.00 USD**

| | | |
|---|---|---|
| 0% | **0.00 USD** | Energy |
| 0% | **0.00 USD** | Investment costs |
| 0% | **0.00 USD** | Installation & commissioning |
| 0% | **0.00 USD** | Operating cost |
| 0% | **0.00 USD** | Maintenance & repair |
| 0% | **0.00 USD** | Downtime |
| 0% | **0.00 USD** | Environmental |
| 0% | **0.00 USD** | Decommissioning |

### First year costs

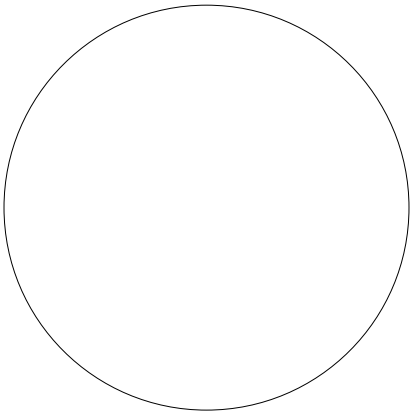

**0.00 USD**

| | | |
|---|---|---|
| 0% | **0.00 USD** | Energy (1st year) |
| 0% | **0.00 USD** | Investment costs (1st year) |
| 0% | **0.00 USD** | Installation & commissioning (1st year) |
| 0% | **0.00 USD** | Operating cost (1st year) |
| 0% | **0.00 USD** | Maintenance & repair (1st year) |
| 0% | **0.00 USD** | Downtime (1st year) |
| 0% | **0.00 USD** | Environmental (1st year) |
| 0% | **0.00 USD** | Decommissioning (1st year) |

*Disclaimer: The calculations and the results are based on user input values and general assumptions and provide only estimated costs for the input data. Xylem inc can therefore not guarantee that the estimated savings will actually occur.*

| Project | Project ID | Created by | Created on | Last update |
|---|---|---|---|---|
| | | | **7/6/2018** | |

# NP 3102 SH 3~ Adaptive 455

## Technical specification

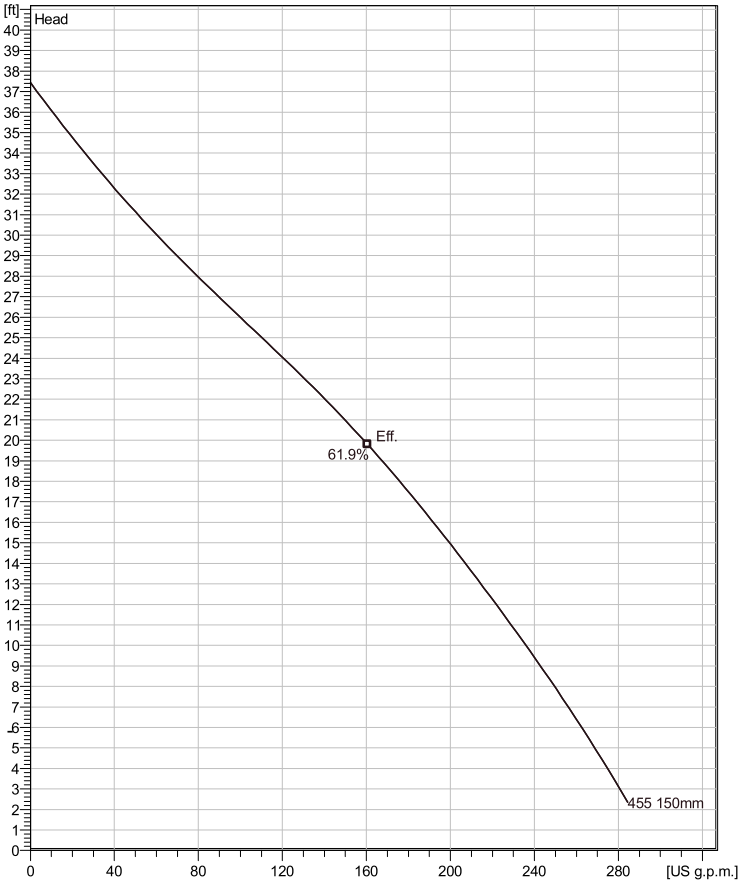


*Water, pure* *Curve ISO*

*Note: Picture might not correspond to the current configuration.*

**Installation: P - Semi permanent, Wet**

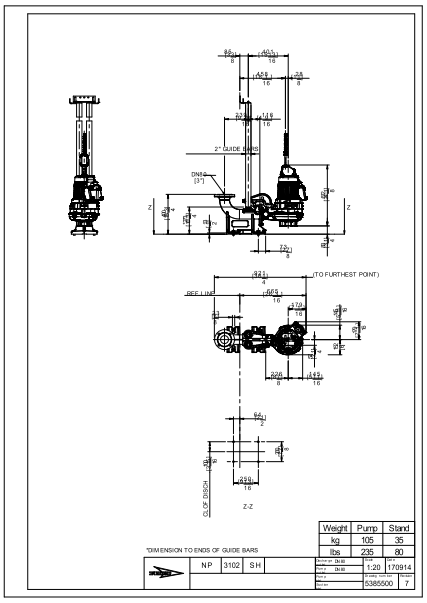


### General

Patented self cleaning semi-open channel impeller, ideal for pumping in waste water applications. Possible to be upgraded with Guide-pin® for even better clogging resistance. Modular based design with high adaptation grade.

### Impeller

| | |
|---|---|
| Impeller material | Stainless steel |
| Discharge Flange Diameter | 3 1/8 inch |
| Suction Flange Diameter | 3 1/8 inch |
| Impeller diameter | 150 mm |
| Number of blades | 2 |

### Motor

| | |
|---|---|
| Motor # | N3102.760 18-11-4AL-W 5hp Standard |
| Stator variant | 1 |
| Frequency | 60 Hz |
| Rated voltage | 460 V |
| Number of poles | 4 |
| Phases | 3~ |
| Rated power | 5 hp |
| Rated current | 6.8 A |
| Starting current | 42 A |
| Rated speed | 1745 rpm |
| Power factor | |
| 1/1 Load | 0.81 |
| 3/4 Load | 0.75 |
| 1/2 Load | 0.63 |
| Motor efficiency | |
| 1/1 Load | 85.1 % |
| 3/4 Load | 85.3 % |
| 1/2 Load | 83.6 % |

### Configuration

| Project | Project ID | Created by | Created on | Last update |
|---|---|---|---|---|
| | | | 7/6/2018 | |

# NP 3102 SH 3~ Adaptive 455

## Performance curve

### Pump

| | |
|---|---|
| Discharge Flange Diameter | 3 1/8 inch |
| Suction Flange Diameter | 80 mm |
| Impeller diameter | 5 7/8" |
| Number of blades | 2 |

### Motor

| | |
|---|---|
| Motor # | N3102.760 18-11-4AL-W 5hp |
| Stator variant | 1 |
| Frequency | 60 Hz |
| Rated voltage | 460 V |
| Number of poles | 4 |
| Phases | 3~ |
| Rated power | 5 hp |
| Rated current | 6.8 A |
| Starting current | 42 A |
| Rated speed | 1745 rpm |

| Power factor | |
|---|---|
| 1/1 Load | 0.81 |
| 3/4 Load | 0.75 |
| 1/2 Load | 0.63 |

| Motor efficiency | |
|---|---|
| 1/1 Load | 85.1 % |
| 3/4 Load | 85.3 % |
| 1/2 Load | 83.6 % |

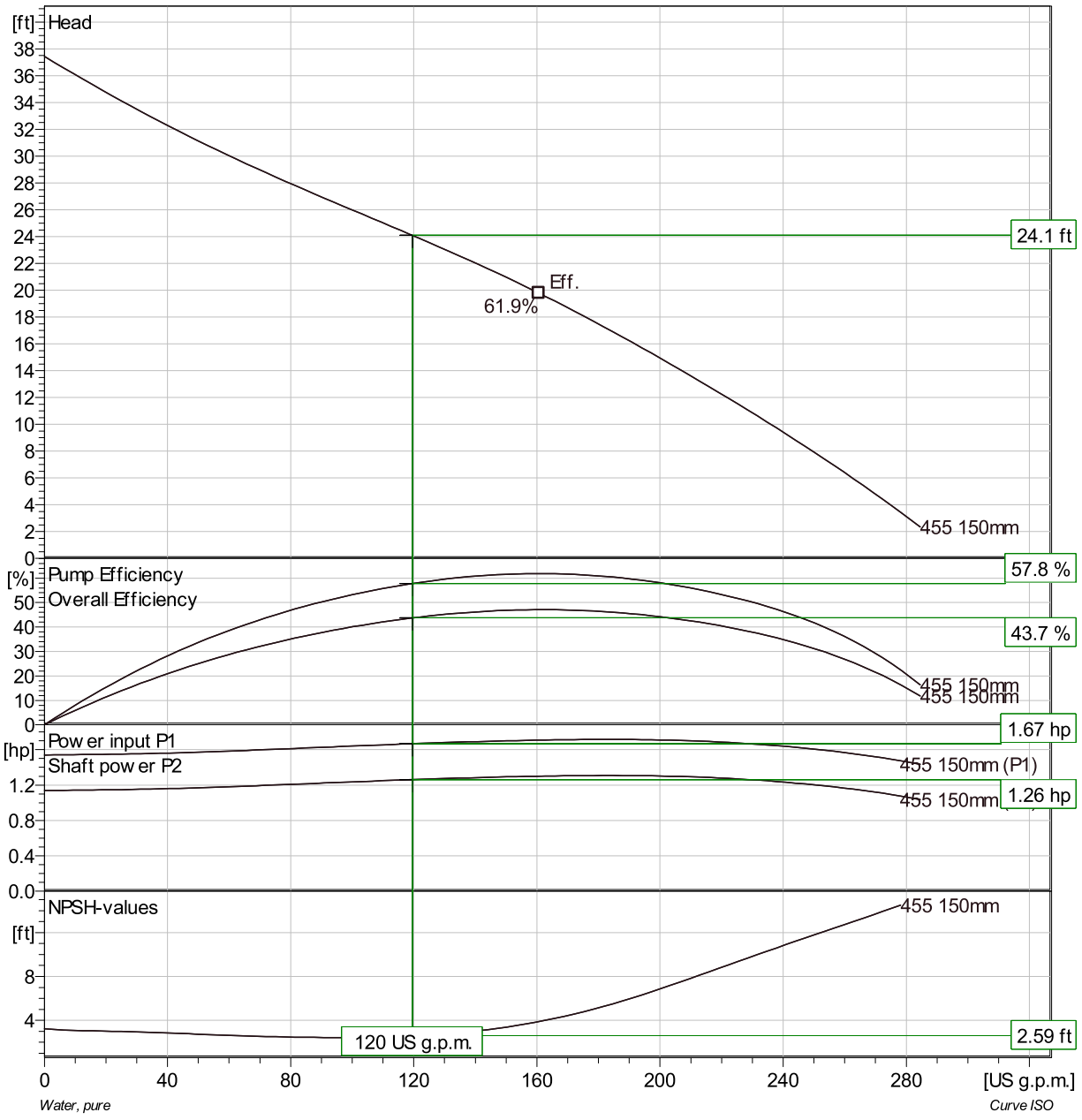


| Project | Project ID | Created by | Created on | Last update |
|---|---|---|---|---|
| | | | 7/6/2018 | |

# NP 3102 SH 3~ Adaptive 455

## Duty Analysis

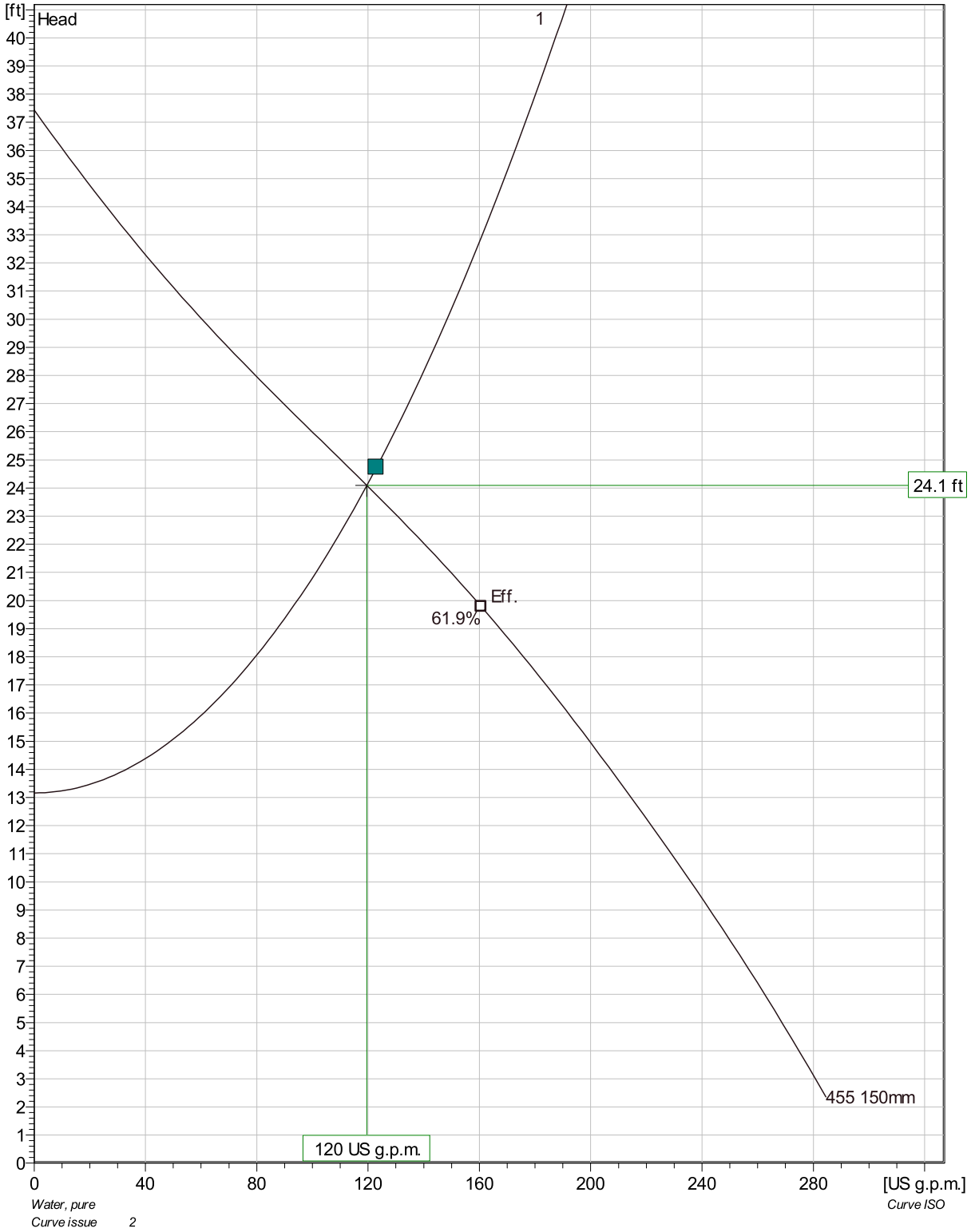


| Pumps running /System | Individual pump Flow | Head | Shaft power | Total Flow | Head | Shaft power | Pump eff. | Specific energy | NPSHre |
|---|---|---|---|---|---|---|---|---|---|
| 1 | 120 US g.p.m. | 24.1 ft | 1.26 hp | 120 US g.p.m. | 24.1 ft | 1.26 hp | 57.8 % | 173 kWh/US MG | 2.59 ft |

| Project | Project ID | Created by | Created on | Last update |
|---|---|---|---|---|
| | | | 7/6/2018 | |

# NP 3102 SH 3~ Adaptive 455

## VFD Curve

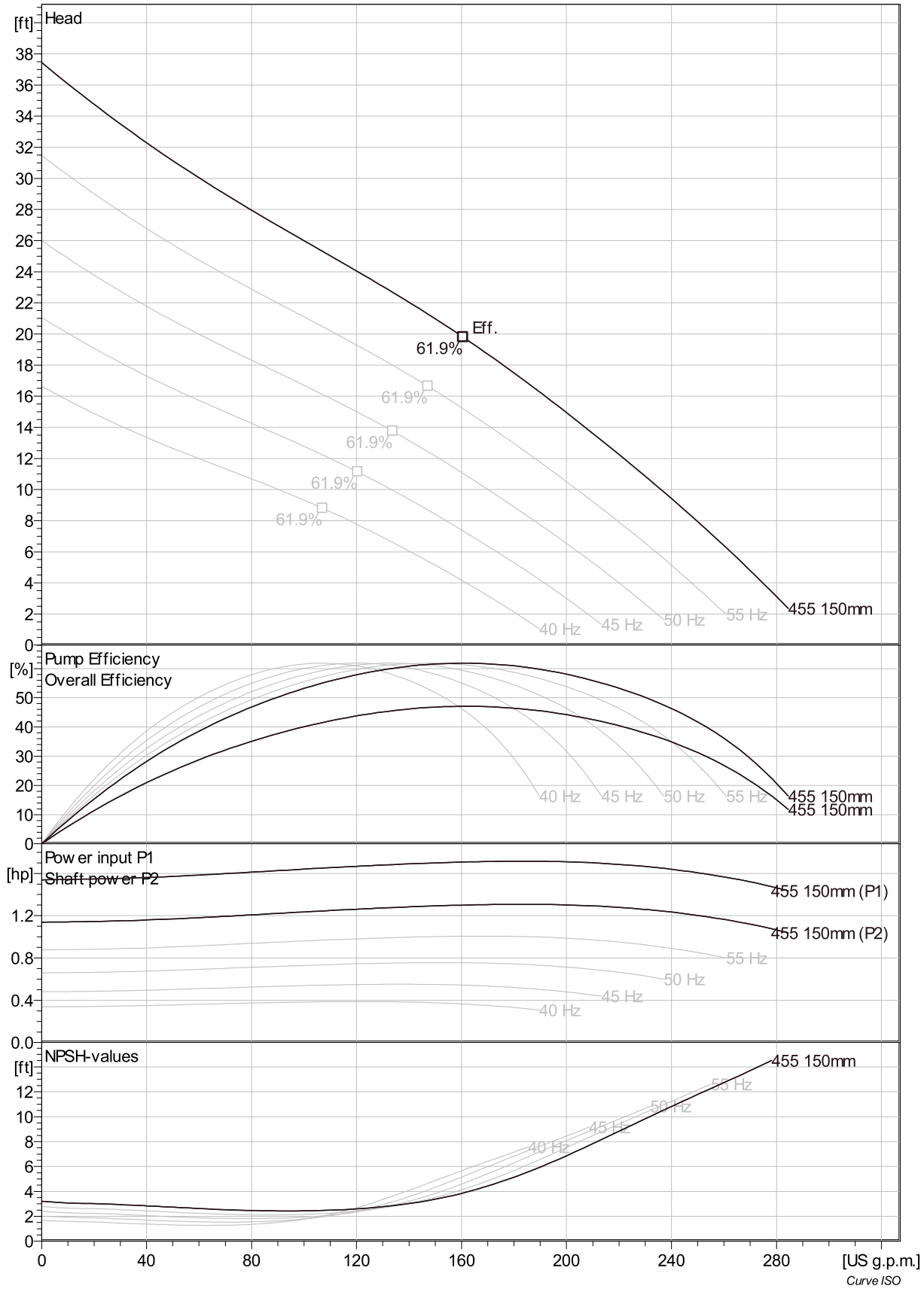


| Project | Project ID | Created by | Created on | Last update |
|---|---|---|---|---|
| | | | 7/6/2018 | |

# NP 3102 SH 3~ Adaptive 455

## VFD Analysis

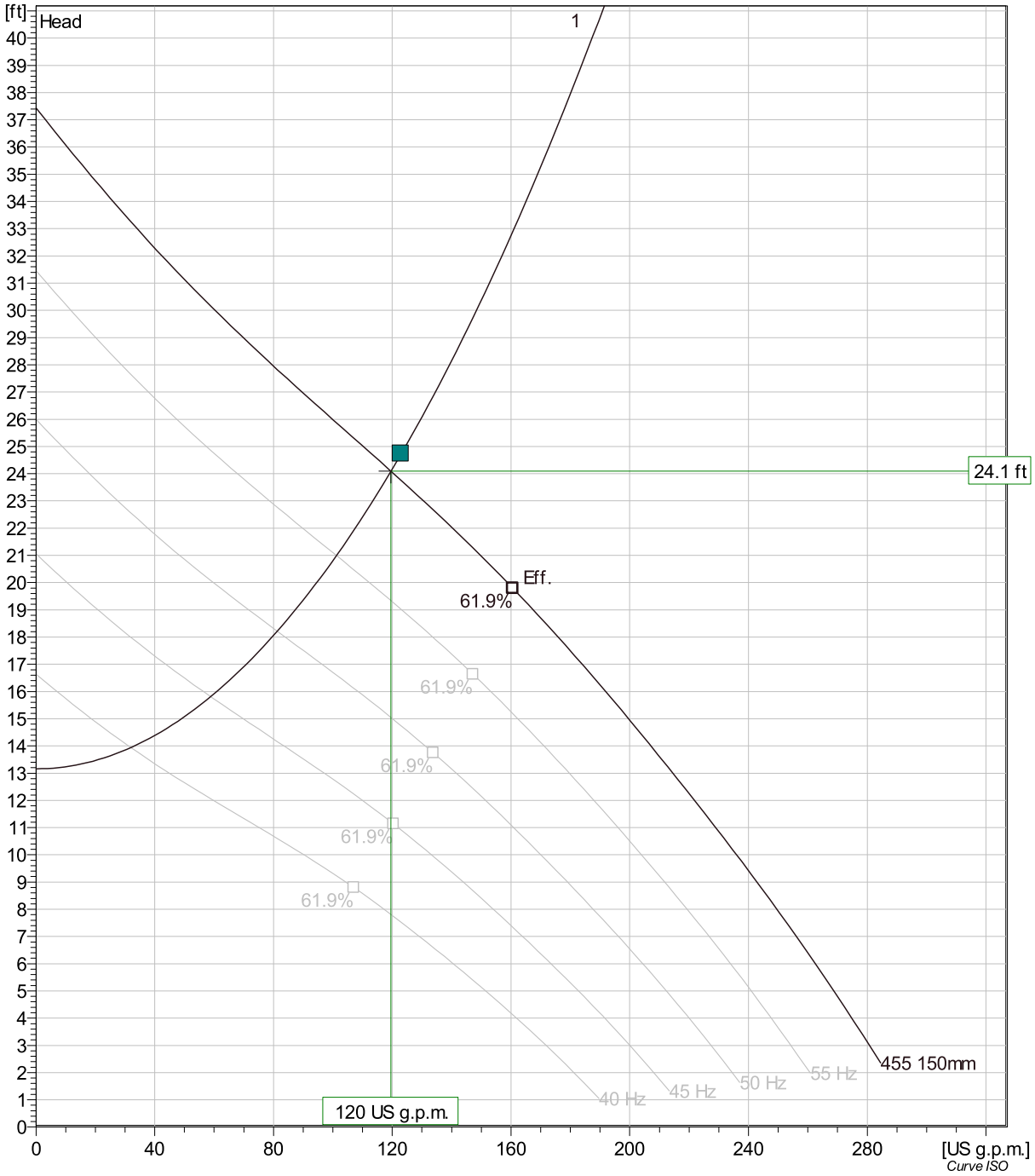


| Pumps running /System | Frequency | Flow | Head | Shaft power | Flow | Head | Shaft power | Hyd eff. | Specific energy | NPSHre |
|---|---|---|---|---|---|---|---|---|---|---|
| 1 | 60 Hz | 120 US g.p.m. | 24.1 ft | 1.26 hp | 120 US g.p.m. | 24.1 ft | 1.26 hp | 57.8 % | 173 kWh/US MG | 2.59 ft |
| 1 | 55 Hz | 101 US g.p.m. | 21 ft | 0.962 hp | 101 US g.p.m. | 21 ft | 0.962 hp | 55.8 % | 167 kWh/US MG | 2.17 ft |
| 1 | 50 Hz | 81.3 US g.p.m. | 18.2 ft | 0.713 hp | 81.3 US g.p.m. | 18.2 ft | 0.713 hp | 52.5 % | 169 kWh/US MG | 1.82 ft |
| 1 | 45 Hz | 58.9 US g.p.m. | 15.8 ft | 0.509 hp | 58.9 US g.p.m. | 15.8 ft | 0.509 hp | 46.3 % | 189 kWh/US MG | 1.56 ft |
| 1 | 40 Hz | 32 US g.p.m. | 13.9 ft | 0.346 hp | 32 US g.p.m. | 13.9 ft | 0.346 hp | 32.6 % | 284 kWh/US MG | 1.44 ft |

| Project | Project ID | Created by | Created on | Last update |
|---|---|---|---|---|
| | | | 7/6/2018 | |

# NP 3102 SH 3~ Adaptive 455

## Dimensional drawing

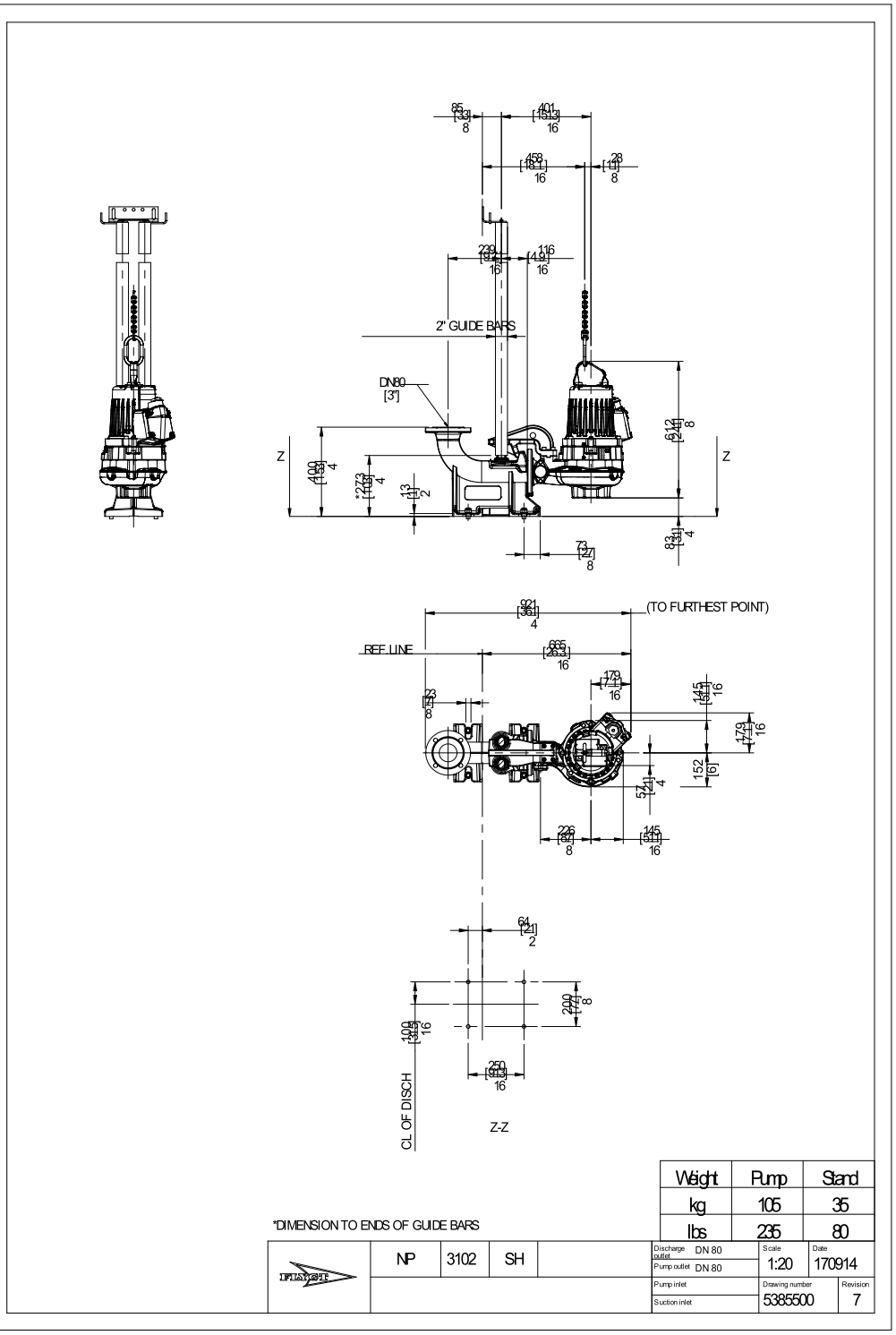


| Project | Project ID | Created by | Created on | Last update |
|---|---|---|---|---|
| | | | 7/6/2018 | |

# NP 3102 SH 3~ Adaptive 455

## Life cycle costs (LCC)

| | | | |
|---|---|---|---|
| Total lifetime | 15 | Inflation rate (rate of price increases) | 2 % |
| Annual operating time | 5600 | Interest rate (for investment) | 3 % |
| Energy cost per kWh | 0.00 USD | | |
| Power input P1 | | | |

### Total costs

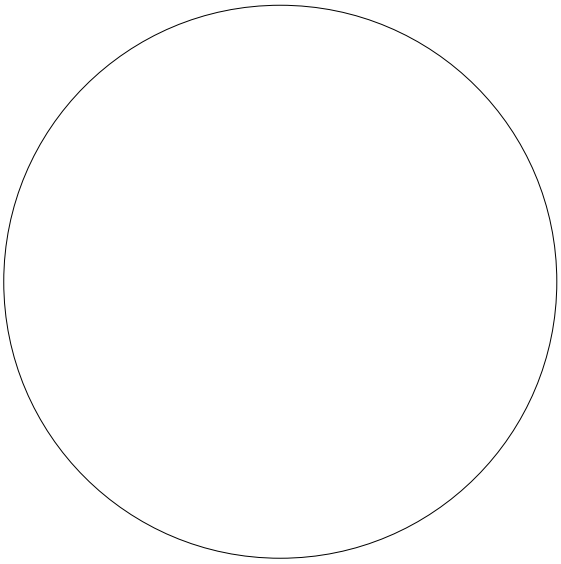

**0.00 USD**

| | | |
|---|---|---|
| 0% | **0.00 USD** | Energy |
| 0% | **0.00 USD** | Investment costs |
| 0% | **0.00 USD** | Installation & commissioning |
| 0% | **0.00 USD** | Operating cost |
| 0% | **0.00 USD** | Maintenance & repair |
| 0% | **0.00 USD** | Downtime |
| 0% | **0.00 USD** | Environmental |
| 0% | **0.00 USD** | Decommissioning |

### First year costs

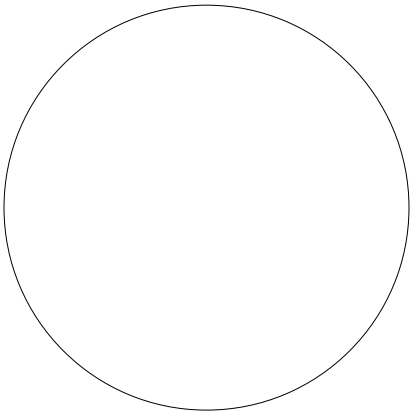

**0.00 USD**

| | | |
|---|---|---|
| 0% | **0.00 USD** | Energy (1st year) |
| 0% | **0.00 USD** | Investment costs (1st year) |
| 0% | **0.00 USD** | Installation & commissioning (1st year) |
| 0% | **0.00 USD** | Operating cost (1st year) |
| 0% | **0.00 USD** | Maintenance & repair (1st year) |
| 0% | **0.00 USD** | Downtime (1st year) |
| 0% | **0.00 USD** | Environmental (1st year) |
| 0% | **0.00 USD** | Decommissioning (1st year) |

*Disclaimer: The calculations and the results are based on user input values and general assumptions and provide only estimated costs for the input data. Xylem inc can therefore not guarantee that the estimated savings will actually occur.*

| Project | Project ID | Created by | Created on | Last update |
|---|---|---|---|---|
| | | | **7/6/2018** | |

GA INDUSTRIES

# LUDLOW Series AWWA C508 Swing Check Valves

## Lever and Weight · Lever and Spring

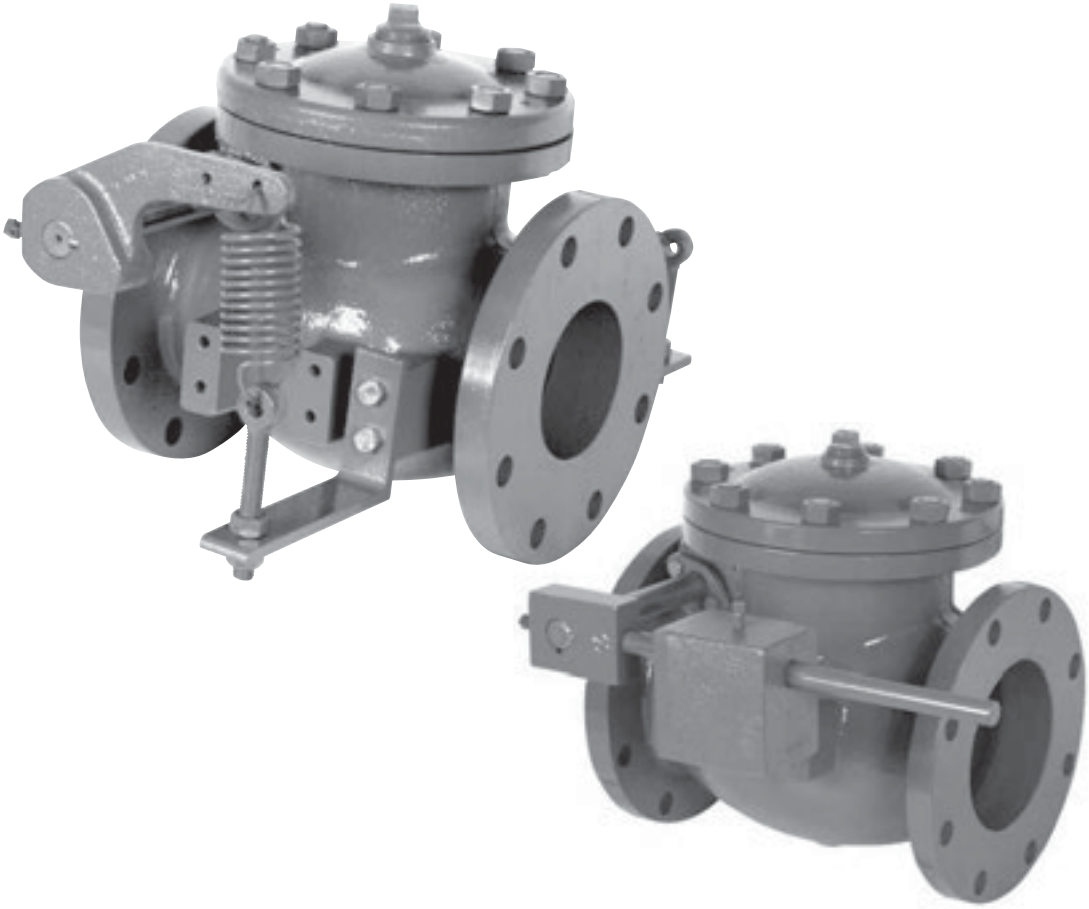

## 3” to 30” for Water, Wastewater and Sewage

VAG® Valve and Gate Group

# LUDLOW SERIES AWWA C508 SWING CHECK VALVE FEATURES

**STANDARD FEATURES**

- Quick-closing, slam resistant operation, ideal for pump station applications
- Meets design, materials of construction and testing requirements of AWWA C508 (latest revision)
- Heavy-duty 250 PSI rated high strength ductile iron body and cover
- Full waterway design for low headloss
- Corrosion and wear resistant stainless steel body seat
- Rubber-faced disc for durable, drop tight seating
- Oversized stainless steel shaft and bronze shaft bearings designed for high cycle operation
- Lined and coated with NSF-61 certified epoxy for long term corrosion resistance
- Stainless steel cover bolts
- Valve is totally serviceable through top flange

**OPTIONAL FEATURES**

- Limit switch to indicate valve position. Available in NEMA 4, 4X, 6, 6P or 7 rating

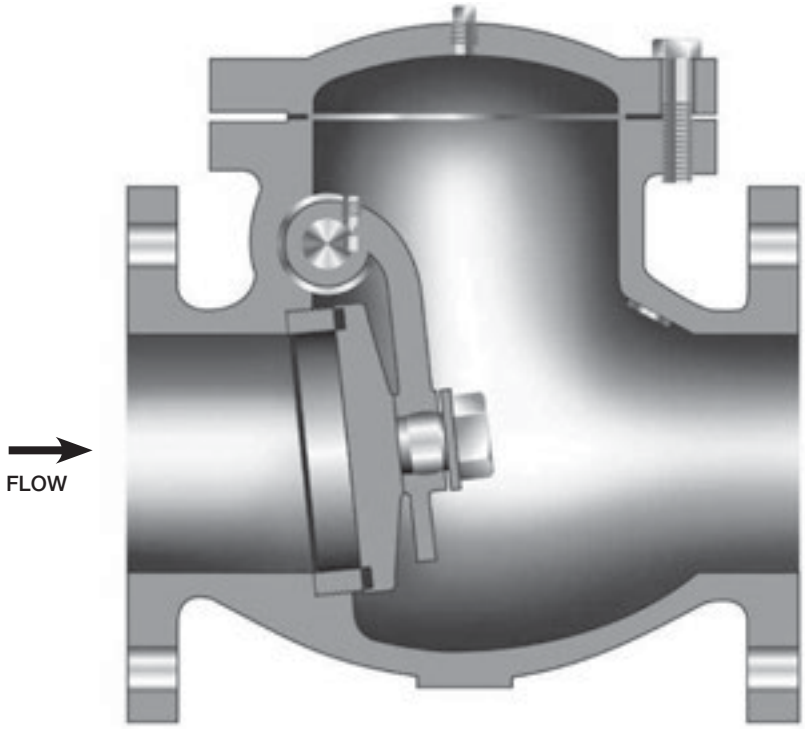


## Table of Contents


Ludlow Series AWWA C508 Check Valves Description, Operation and Headloss ..... 1

Ludlow Series Figure 340-W Lever and Weight Swing Check Valves ..... 2-3

Ludlow Series Figure 340-S Lever and Spring Swing Check Valves ..... 4-5

# CHECK VALVES DESCRIPTION, OPERATION AND HEADLOSS

## Description

LUDLOW Series Swing Check Valves provide long-term, dependable service in water, wastewater and raw sewage applications. LUDLOW Series Swing Check Valves are ruggedly designed to withstand the rigors and frequent operation of pump station use, opening freely when the pump starts and closing quickly and quietly upon pump shutdown to prevent reverse flow. The LUDLOW Series check valves meet or exceed the requirements of AWWA C508, are rubber-seated for zero leakage and are available with either outside lever and weight or lever and spring for installation in horizontal or vertical pipes.

| Valve Size | GA | | STANDARD SWING CHECK | |
|---|---|---|---|---|
| | Diameter | Area | Diameter | Area |
| 3 | 3/4” | .44 sq.in. | 5/8” | .31 sq.in. |
| 4 | 7/8” | .60 sq.in. | 3/4” | .44 sq.in. |
| 6 | 1” | .79 sq.in. | 7/8” | .60 sq.in. |
| 8 | 1-1/4” | 1.2 sq.in. | 1” | .79 sq.in. |
| 10 | 1-1/4” | 1.2 sq.in. | 1-1/8” | 1.0 sq.in. |
| 12 | 1-1/2” | 1.8 sq.in. | 1-1/8” | 1.0 sq.in. |
| 14 | 2” | 3.1 sq.in. | 1-1/8” | 1.0 sq.in. |
| 16 | 2” | 3.1 sq.in. | 1-1/4” | 1.2 sq.in. |
| 18 | 2” | 3.1 sq.in. | 1-1/2” | 1.8 sq.in. |
| 20 | 2” | 3.1 sq.in. | 1-1/2” | 1.8 sq.in. |
| 24 | 2-3/4” | 5.9 sq.in. | 2” | 3.1 sq.in. |
| 30 | 2-1/2” | 5.9 sq.in. | 2-1/2” | 4.9 sq.in. |

## Pump Check Operation

At pump start, the valve disc swings away from the seat in proportion to the fluid’s forward flow velocity, lifting the counter–weight or extending the external spring as it does. The design of the LUDLOW Series valve provides a full flow area when the disc has swung away from the seat by as little as 22.5 degrees but can open as much as 60 degrees if the fluid velocity is sufficient.

At pump shutdown, the force of the heavy counterweight or extended spring “pulls” the valve closed through the decreasing forward fluid velocity during pump coastdown so the valve is fully seated before fluid reversal occurs, precluding slam and bang.

The heavy closure devices needed to ensure quiet closure require over-sized hinge shaft and bearings to withstand the forces produced by rapid closure. Figure 1 compares the significantly larger diameter shaft of the LUDLOW Series Swing Check Valve to that of a “standard” swing check. These small shaft diameters could not accommodate the heavy closure devices needed for quiet operation thus increasing the likelihood of slam and bang.

**Figure 1**

**Typical Swing Check Valve Shaft Diameter Comparison**

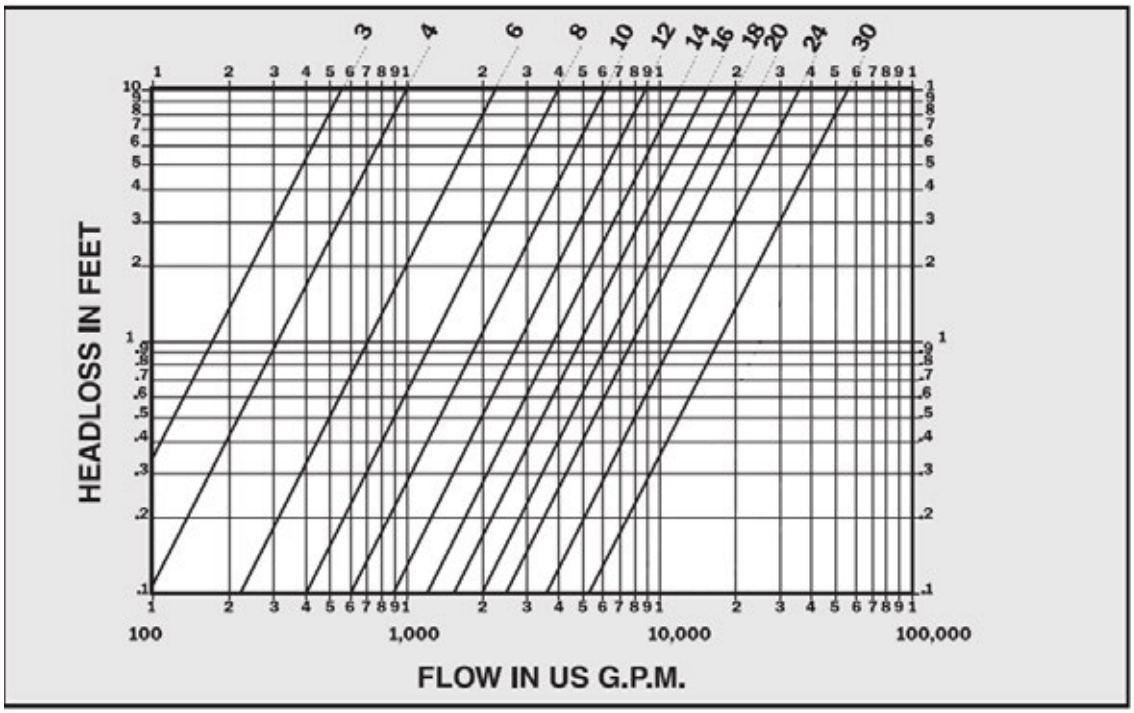


## Headloss

LUDLOW Series Swing Check Valves Full Open Headloss

## LUDLOW Series Figure 340-W

# LEVER AND WEIGHT SWING CHECK VALVES

## COMBATS SLAM

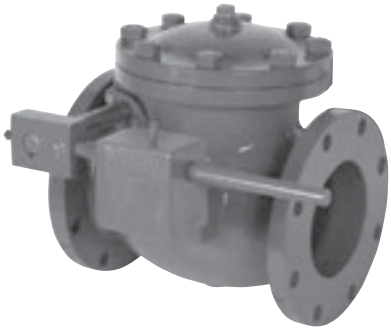

FIG. NO. 340-W (Single Lever and Weight)

More than a century of valve design and manufacturing.

Consult factory for availability of options.

**Working Pressure**

**3” through 30” 250 psi**

**Hydrostatic Test Pressure**

**3” through 30” 400 psi**

## FEATURES

1. Meets design, materials of construction and testing requirements of AWWA C508 (latest revision)
2. ANSI Class 125 flanged, 250 PSI rated ductile iron construction
3. NSF-61 certified epoxy lined and coated
4. Stainless steel body seat
5. Rubber faced ductile iron disc for zero seat leakage
6. Adjustable Teflon shaft packing for low friction operation
7. Stainless steel hinge shaft supported at both ends in lead free bronze bearings
8. Powerful closure devices for non-slam operation

## MATERIALS OF CONSTRUCTION

| Part Name | Standard Material |
|---|---|
| Body, Cover Disc and Disc Arm | Ductile Iron ASTM A536 Grade 65-45-12 |
| Body Seat | 316 Stainless Steel |
| Resilient Seat | Nitrile (Buna-N) |
| Shaft, Key | 304 Stainless Steel |
| Cover Gasket | Graphite |
| Exterior Studs Bolts and Nuts | 304 Stainless Steel |

NOTE: Also available with Lever & Spring or Cushioned Lever & Weight.

## CROSS SECTION

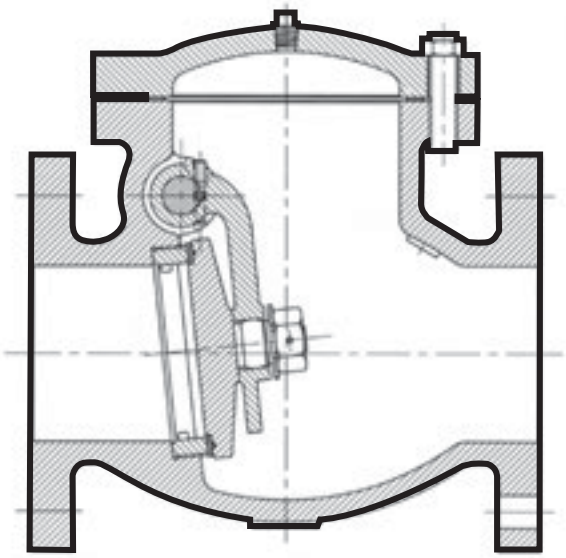

## LUDLOW Series Figure 340-W

# LEVER AND WEIGHT SWING CHECK VALVES

| GENERAL DIMENSIONS | | | | | | | | | | | |
|---|---|---|---|---|---|---|---|---|---|---|---|
| SIZE | | A | | B | | C | | D | | WEIGHT | |
| Inches | MM | Inches | MM | Inches | MM | Inches | MM | Inches | MM | lbs | kg |
| 3” | 80 | 9-1/2 | 241 | 6-1/4 | 157 | 3 | 75.8 | 9-1/4 | 247 | 70 | 32 |
| 4” | 100 | 11-1/2 | 292 | 7-1/2 | 186 | 3-3/4 | 93.9 | 10-1/4 | 259 | 100 | 45 |
| 6” | 150 | 14 | 356 | 9-1/2 | 237 | 14 | 125 | 11-7/8 | 301 | 170 | 77 |
| 8” | 200 | 19-1/2 | 495 | 11-1/4 | 282 | 5 | 163 | 14 | 358 | 300 | 136 |
| 10” | 250 | 24-1/2 | 622 | 14-1/4 | 357 | 7-1/2 | 188 | 15-1/4 | 387 | 450 | 204 |
| 12” | 300 | 27-1/2 | 698 | 16-1/2 | 417 | 8-7/8 | 224 | 16-3/8 | 416 | 650 | 295 |
| 14” | 350 | 31 | 787 | 17-3/4 | 447 | 10-1/2 | 265 | 17-1/4 | 439 | 950 | 430 |
| 16” | 400 | 36 | 914 | 19-1/2 | 495 | 11-5/8 | 296 | 22 | 557 | 1200 | 545 |
| 18” | 450 | 40 | 1016 | 21-1/8 | 536 | 12-5/8 | 320 | 23-1/4 | 590 | 1500 | 680 |
| 20” | 500 | 40 | 1016 | 23-1/4 | 586 | 14 | 357 | 24-1/2 | 621 | 2000 | 907 |
| 24” | 600 | 48 | 1210 | 28-1/2 | 720 | 17-1/8 | 435 | 27 | 686 | 3000 | 1360 |
| 30” | 750 | 60 | 1524 | 33 | 838 | 26 | 660 | 41 | 1041 | 6000 | 2727 |

Dimensions are approximate. Request certified drawings if clearances are critical.

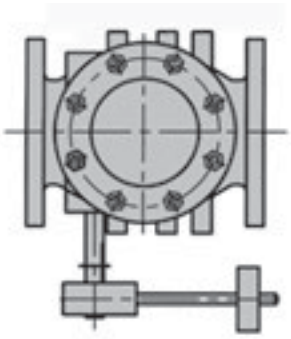

Figure 340-W Lever & Weight

- Flanges per ANSI B16.1 Class 125
- Lever & counterweight only available located on right side of valve facing inlet
- Standard valve configured for horizontal installation
- Vertical installation available
- DPDT limit switch available

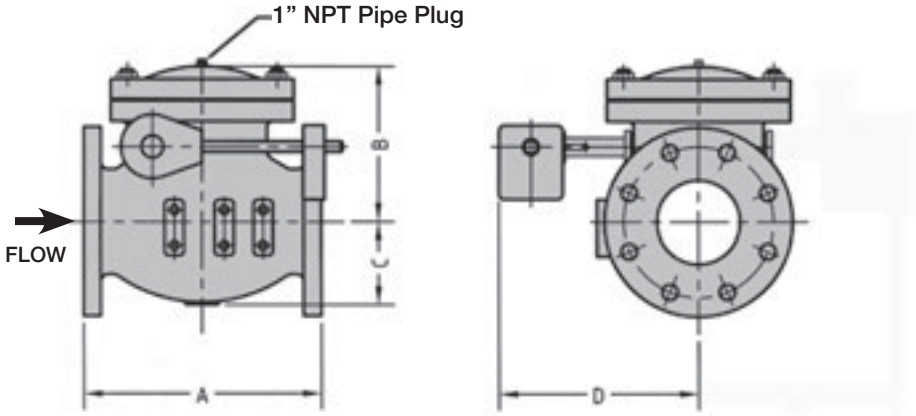

## LUDLOW Series Figure 340-S

# LEVER AND SPRING SWING CHECK VALVES

## COMBATS SLAM

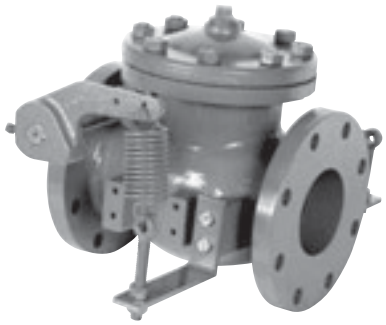

FIG. NO. 340-S (Single Lever and Spring)

More than a century of valve design and manufacturing.

Consult factory for availability of options.

**Working Pressure**

**3” through 30” 250 psi**

**Hydrostatic Test Pressure**

**3” through 30” 400 psi**

## FEATURES

1. Meets design, materials of construction and testing requirements of AWWA C508 (latest revision)
2. ANSI Class 125 flanged, 250 PSI rated ductile iron construction
3. NSF-61 certified epoxy lined and coated
4. Stainless steel body seat
5. Rubber faced ductile iron disc for zero seat leakage
6. Adjustable Teflon shaft packing for low friction operation
7. Stainless steel hinge shaft supported at both ends in lead free bronze bearings
8. Powerful closure devices for non-slam operation

## MATERIALS OF CONSTRUCTION

| Part Name | Standard Material |
|---|---|
| Body, Cover Disc and Disc Arm | Ductile Iron ASTM A536 Grade 65-45-12 |
| Body Seat | 316 Stainless Steel |
| Resilient Seat | Nitrile (Buna-N) |
| Shaft, Key | 304 Stainless Steel |
| Cover Gasket | Graphite |
| Exterior Studs Bolts and Nuts | 304 Stainless Steel |

NOTE: Also available with Lever & Weight or Cushioned Lever & Weight.

## CROSS SECTION

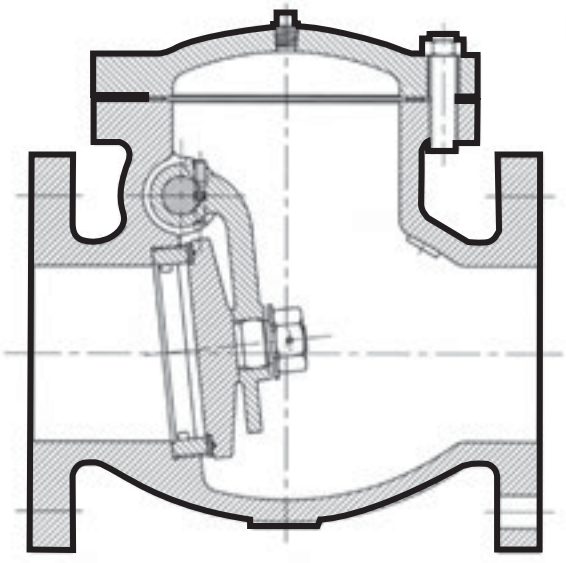

## LUDLOW Series Figure 340-S

# LEVER AND SPRING SWING CHECK VALVES

| GENERAL DIMENSIONS | | | | | | | | | | | |
|---|---|---|---|---|---|---|---|---|---|---|---|
| SIZE | | A | | B | | C | | D | | WEIGHT | |
| Inches | MM | Inches | MM | Inches | MM | Inches | MM | Inches | MM | lbs | kg |
| 3” | 80 | 9-1/2 | 241 | 6-1/4 | 157 | 3 | 75.8 | 9-1/4 | 247 | 70 | 32 |
| 4” | 100 | 11-1/2 | 292 | 7-1/2 | 186 | 3-3/4 | 93.9 | 10-1/4 | 259 | 100 | 45 |
| 6” | 150 | 14 | 356 | 9-1/2 | 237 | 14 | 125 | 11-7/8 | 301 | 170 | 77 |
| 8” | 200 | 19-1/2 | 495 | 11-1/4 | 282 | 5 | 163 | 14 | 358 | 300 | 136 |
| 10” | 250 | 24-1/2 | 622 | 14-1/4 | 357 | 7-1/2 | 188 | 15-1/4 | 387 | 450 | 204 |
| 12” | 300 | 27-1/2 | 698 | 16-1/2 | 417 | 8-7/8 | 224 | 16-3/8 | 416 | 650 | 295 |
| 14” | 350 | 31 | 787 | 17-3/4 | 447 | 10-1/2 | 265 | 17-1/4 | 439 | 950 | 430 |
| 16” | 400 | 36 | 914 | 19-1/2 | 495 | 11-5/8 | 296 | 22 | 557 | 1200 | 545 |
| 18” | 450 | 40 | 1016 | 21-1/8 | 536 | 12-5/8 | 320 | 23-1/4 | 590 | 1500 | 680 |
| 20” | 500 | 40 | 1016 | 23-1/4 | 586 | 14 | 357 | 24-1/2 | 621 | 2000 | 907 |
| 24” | 600 | 48 | 1210 | 28-1/2 | 720 | 17-1/8 | 435 | 27 | 686 | 3000 | 1360 |
| 30” | 750 | 60 | 1524 | 33 | 838 | 26 | 660 | 41 | 1041 | 6000 | 2727 |

Dimensions are approximate. Request certified drawings if clearances are critical.

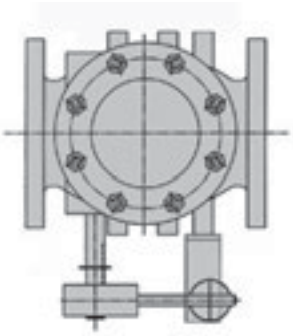

Figure 340-S Lever & Spring

- Flanges per ANSI B16.1 Class 125
- Lever & spring only available lcated on right side of valve facing inlet
- Standard valve configured for horizontal installation
- Vertical installation available
- DPDT limit switch available

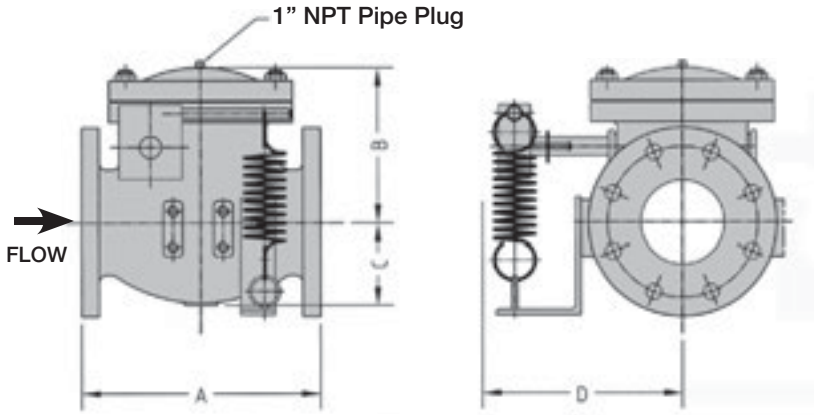

## GA Industries offers a broad range of valves designed specifically for the waterworks market

**AWWA C504**
**Rubber Seated Butterfly Valves**
- Flanged and Mechanical Joint Ends
- Manual and Automatic Actuation

**AWWA C507**
**Ball Valves**
- Metal Seated
- Resilient Seated
- Hydraulic, Pneumatic, or Electric Motor Actuation

**AWWA C508**
**Check Valves**
- Cushioned Swing Check
- Rubber Flapper Check
- Globe and Wafer Silent Check
- Ball Check
- Foot Valves

**AWWA C512**
**Air Valves for Water and Sewage**
- Air Release
- Air and Vacuum
- Combination
- Vacuum Breaking

**AWWA C517**
**Eccentric Plug Valves**
- Flanged, Threaded, and Mechanical Joint Ends
- Manual and Automatic Actuation

**AWWA C530**
**Control Valves**
- Pump Control for Water and Sewage
- Surge Relief for Water and Sewage
- Level Control
- Pressure Regulating
- Solenoid Operated
- Anti-Cavitation

**For more information** about GA Industries' products, or to contact a sales representative, visit the GA website **www.gaindustries.com**

**GA Industries, LLC** • 9025 Marshall Road • Cranberry Township, PA 16066-3696 USA • Phone: 724-776-1020 • Fax: 724-776-1254 • **ga@gaindustries.com**

VAG® Valve and Gate Group

Rodney Hunt, Fontaine, and GA Industries are now the **Valve and Gate Group**. We will continue to market our products under our heritage brands — but the breadth and depth of our product offerings, technology options, and engineering capabilities have expanded exponentially.

Together, we provide the most comprehensive line of flow control solutions in the industry. Learn more about us at **www.vag-usa.com**.

GA-340SCV-0714

# SIMPLEX SENTRY

REDUNDANT RUN (HIGH LEVEL)
EXTERNAL VISUAL & AUDIBLE ALARM
EXTERNAL LATCHING MANUAL SILENCE
MANUAL RUN
PUMP RUN INDICATOR
CONFORMAL COATED CIRCUIT BOARD
PADLOCK
NEMA 4X ENCLOSURE ASSEMBLY
CORROSION PROOF THERMOPLASTIC POLYESTER APPROVED BY UL FOR ELECTRICAL CONTROL ENCLOSURE

OPTIONS:

- ☐ ALARM CONTACTS
- ☐ HOUR METER
- ☐ GENERATOR RECPT

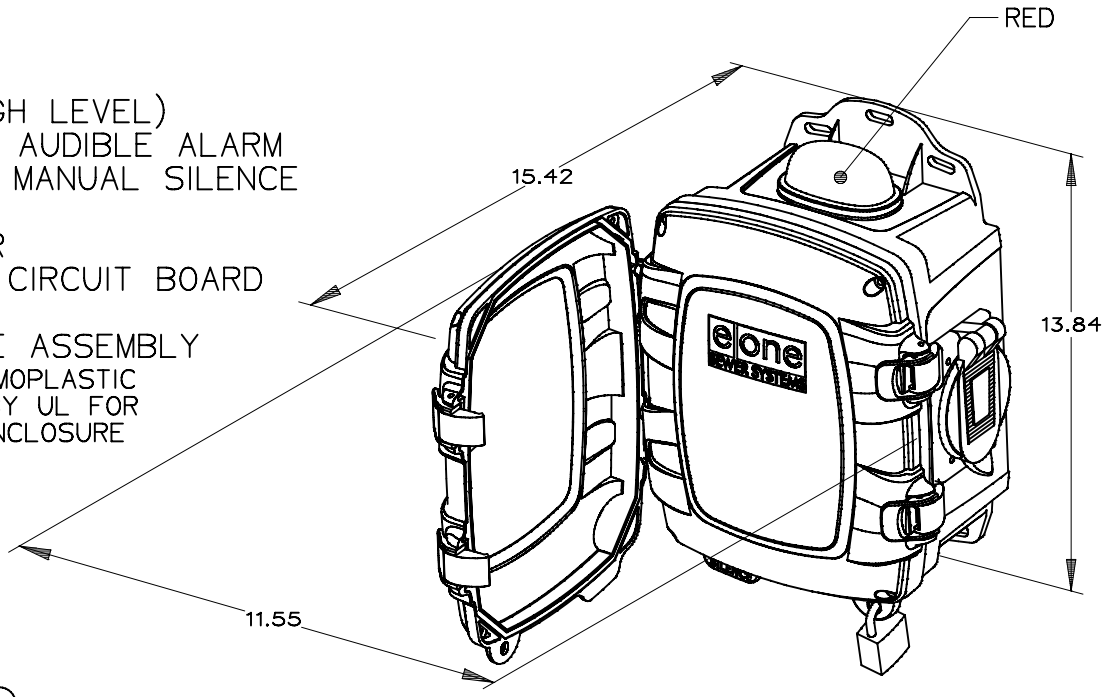


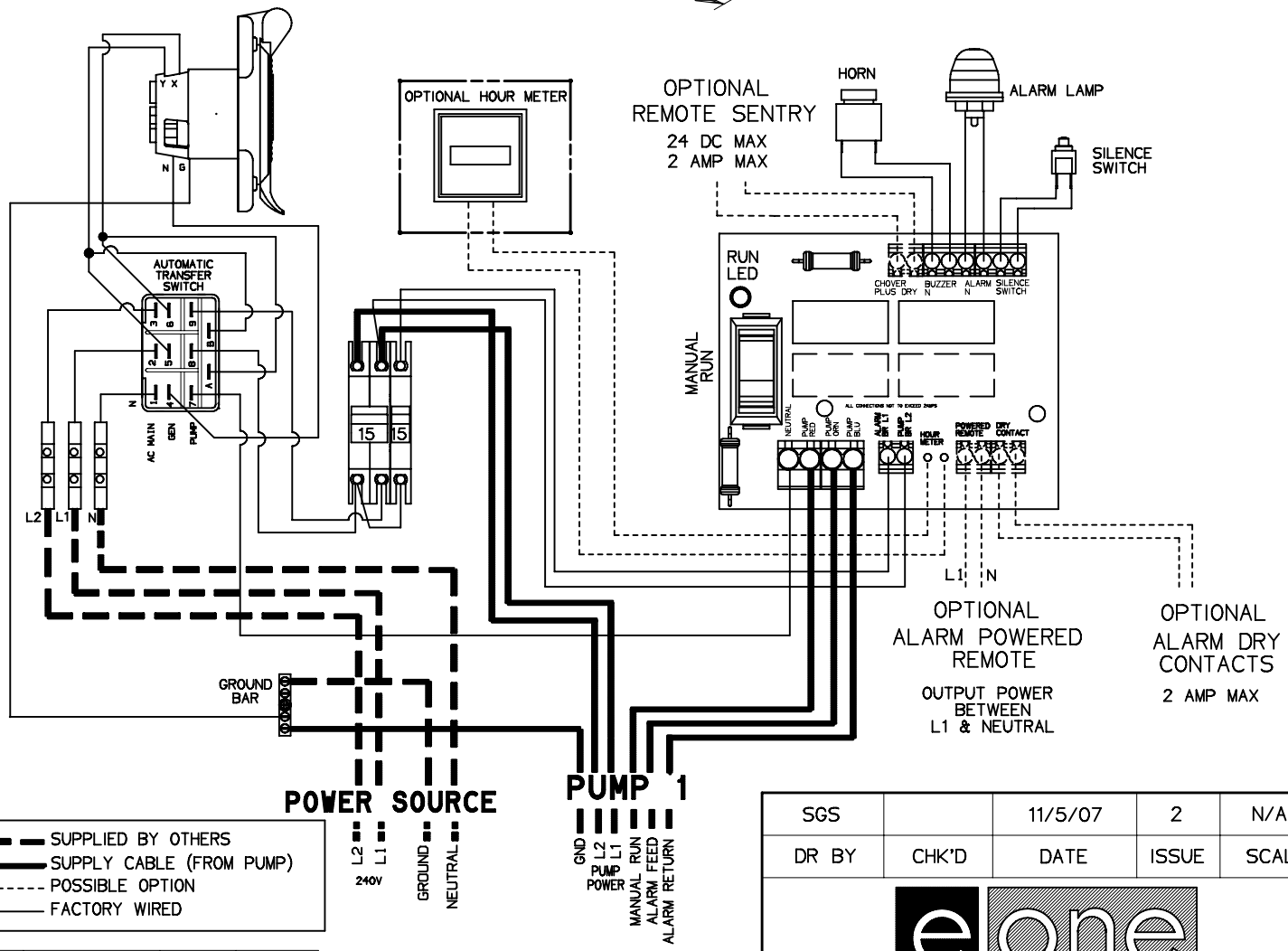


- SUPPLIED BY OTHERS
- SUPPLY CABLE (FROM PUMP)
- POSSIBLE OPTION
- FACTORY WIRED

| PIN | FUNCTION | 2000S | EXTREME |
|---|---|---|---|
| 1 | MANUAL RUN | RED | BROWN |
| 2 | L1 | BLACK | RED |
| 3 | L2 | WHITE | BLACK |
| 4 | GND | GREEN | GRN/YEL |
| 5 | ALARM FEED | ORANGE | YELLOW |
| 6 | ALARM RETURN | BLUE | BLUE |

CONTROL CABLE:
TYPE TC: DIRECT BURIAL, 12AWG, SIX CONDUCTOR

UPC® ASME A112.3.4

LR28268 LISTED 506D

| SGS | | 11/5/07 | 2 | N/A |
|---|---|---|---|---|
| DR BY | CHK'D | DATE | ISSUE | SCALE |

e one SEWER SYSTEMS

SIMPLEX SENTRY, 240V 60Hz.
WITH GENERATOR RECEPTACLE

ESD 06-0003

E/ONE EXTREME SERIES

# DH071/DR071

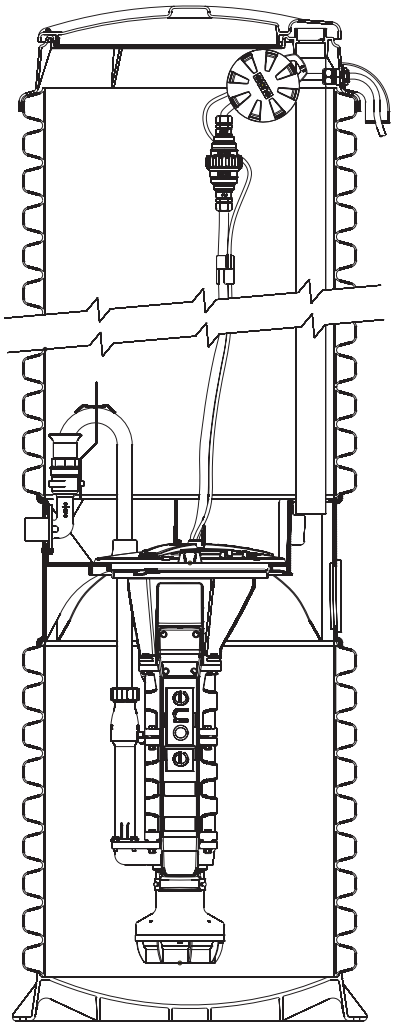

## General Features

The model DH071 or DR071 grinder pump station is a complete unit that includes: the grinder pump, check valve, HDPE (high density polyethylene) tank, controls, and alarm panel. A single DH071 or DR071 is a popular choice for one, average single-family home and can also be used for up to two average single-family homes where codes allow and with consent of the factory.

- Rated for of 700 gpd (2650 lpd)
- 70 gallons (265 liters) of capacity
- Indoor or outdoor installation
- Standard outdoor heights range from 61 inches to 160 inches

The DH071 is the “hardwired,” or “wired,” model where a cable connects the motor controls to the level controls through watertight penetrations.

The DR071 is the “radio frequency (RFID), or “wireless,” model that uses wireless technology to communicate between the level controls and the motor controls.

## Operational Information

*Motor*
1 hp, 1,725 rpm, high torque, capacitor start, thermally protected, 120/240V, 60 Hz, 1 phase

*Inlet Connections*
4-inch inlet grommet standard for DWV pipe. Other inlet available from the factory.

*Discharge Connections*
Pump discharge terminates in 1.25-inch NPT female thread. Can easily be adapted to 1.25-inch PVC pipe or any other material required by local codes.

*Discharge*
15 gpm at 0 psig (0.95 lps at 0 m)
11 gpm at 40 psig (0.69 lps at 28 m)
7.8 gpm at 80 psig (0.49 lps at 56 m)

## Accessories

E/One recommends that the Uni-Lateral, E/One’s own stainless steel check valve, be installed between the grinder pump station and the street main for added protection against .

Alarm panels are available with a variety of options, from basic monitoring to advanced notice of service requirements.

The Remote Sentry is ideal for installations where the alarm panel may be hidden from view.

Patent Numbers: 5,752,315
5,562,254 5,439,180

NA0050P01 Rev B

# OPTIONS : ☐ DH071 (HARD WIRED LEVEL CONTROLS)
☐ DR071 (WIRELESS LEVEL CONTROLS)

FIELD JOINT REQUIRED
FOR MODELS
DH071-129 / DR071-129
&
DH071-160 / DR071-160

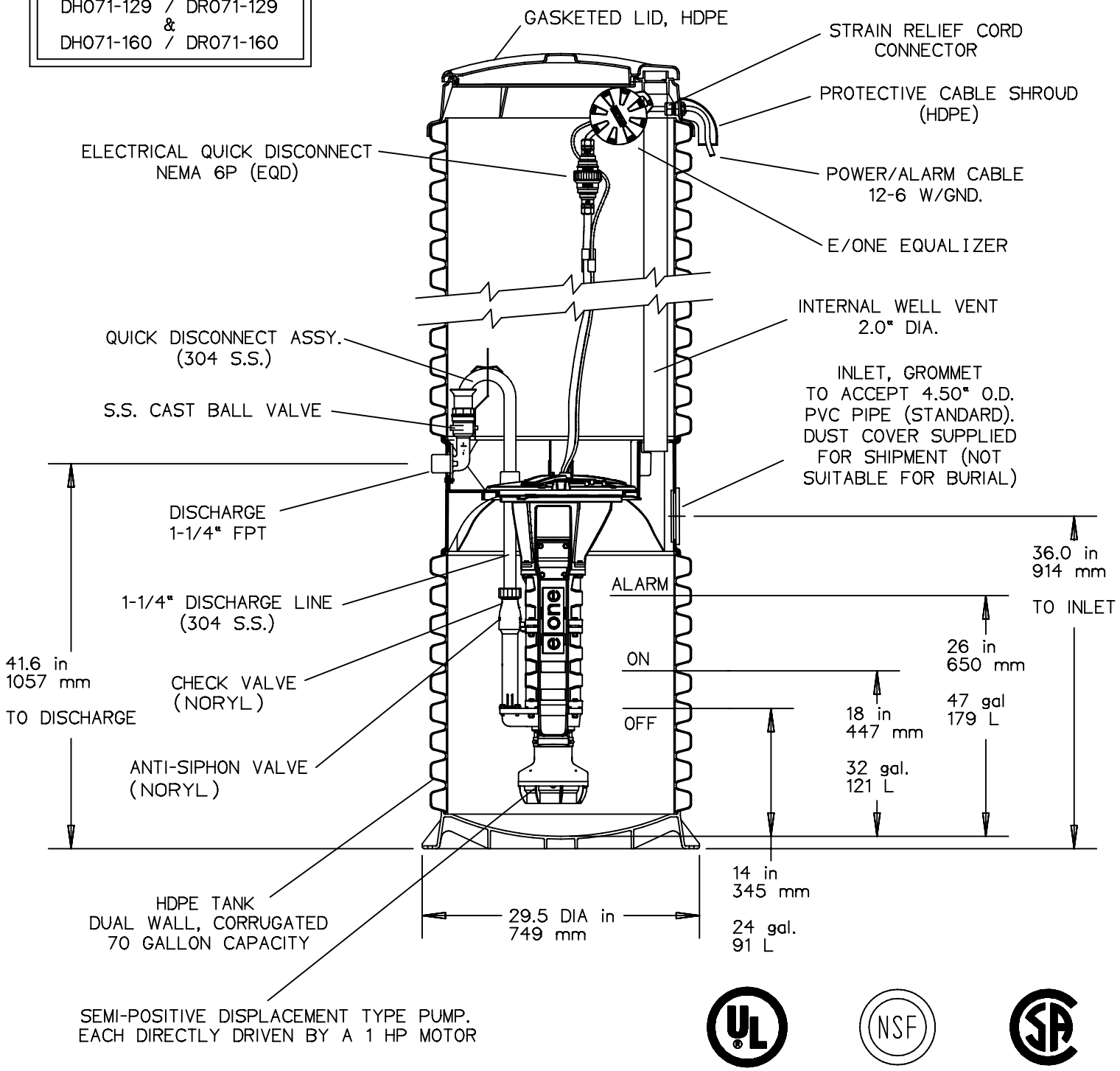


CONCRETE BALLAST MAY BE REQUIRED
SEE INSTALLATION INSTRUCTION
FOR DETAILS

| AD | CH | 10/20/10 | C | |
|---|---|---|---|---|
| DR BY | CHK'D | DATE | ISSUE | SCALE |

e one SEWER SYSTEMS

MODEL DH071 / DR071
DETAIL SHEET

NA0050P02

# DH071-44
## INDOOR UNIT

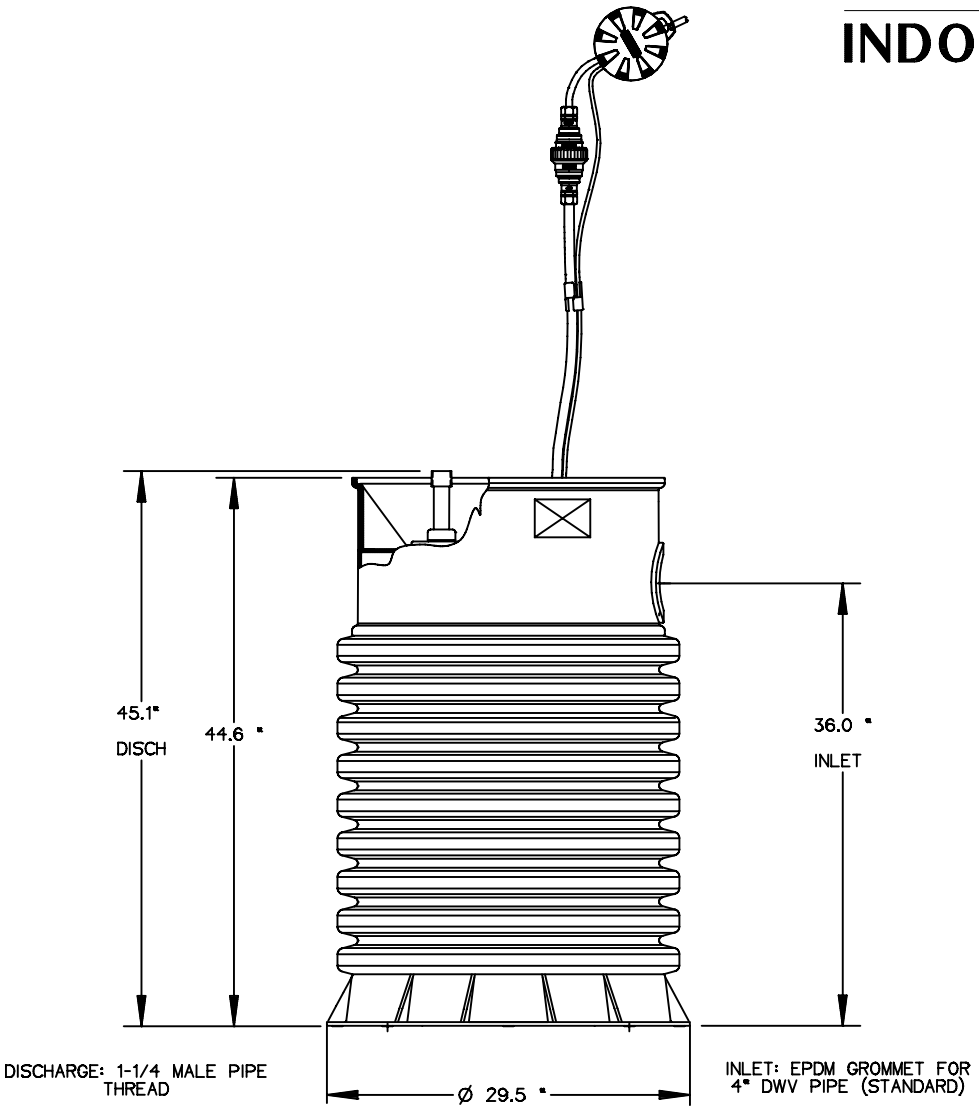


| LNT | GAE | 04/24/07 | - | |
|---|---|---|---|---|
| DR BY | CHK'D | DATE | ISSUE | SCALE |

SEWER SYSTEMS

MODEL DH071-44

NA0050P03

# OPTIONS : ☐ DH071-61 (HARD WIRED LEVEL CONTROLS)
# ☐ DR071-61 (WIRELESS LEVEL CONTROLS)

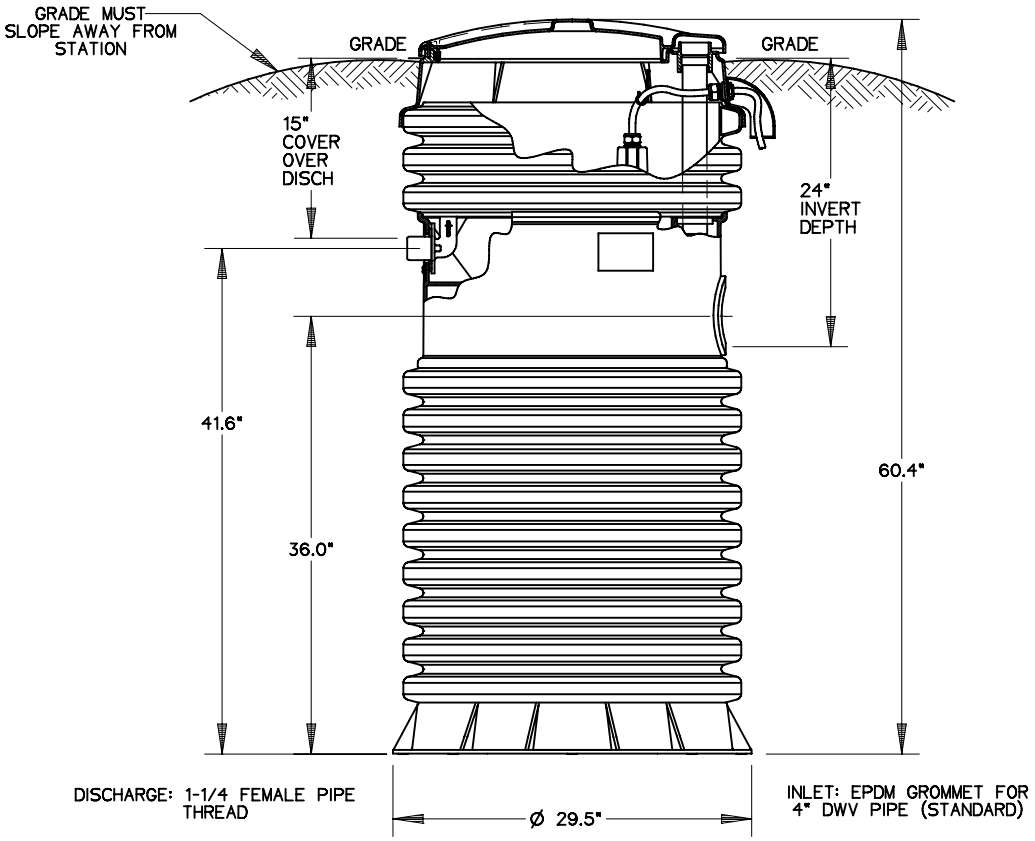


CONCRETE BALLAST MAY BE REQUIRED
SEE INSTALLATION INSTRUCTIONS
FOR DETAILS

| AD | CAH | 07/12/07 | A | 1/16 |
|---|---|---|---|---|
| DR BY | CHK'D | DATE | ISSUE | SCALE |

SEWER SYSTEMS

MODEL DH071-61 / DR071-61

NA0050P04

# OPTIONS : ☐ DH071-74 (HARD WIRED LEVEL CONTROLS)
# ☐ DR071-74 (WIRELESS LEVEL CONTROLS)

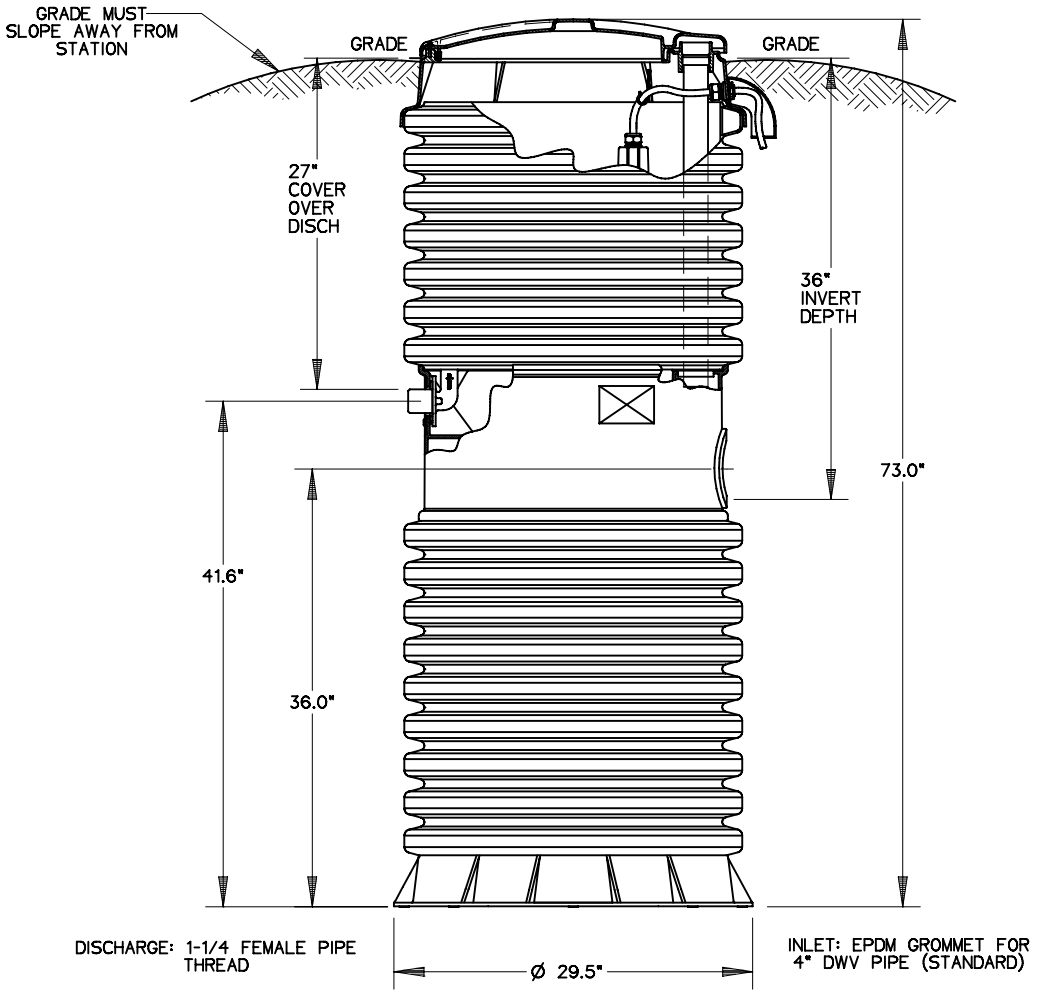


CONCRETE BALLAST MAY BE REQUIRED
SEE INSTALLATION INSTRUCTION
FOR DETAILS

| AD | CAH | 07/12/07 | A | 1/16 |
|---|---|---|---|---|
| DR BY | CHK'D | DATE | ISSUE | SCALE |

SEWER SYSTEMS

MODEL DH071-74 / DR071-74

NA0050P05

# OPTIONS : ☐ DH071-93 (HARD WIRED LEVEL CONTROLS)
# ☐ DR071-93 (WIRELESS LEVEL CONTROLS)

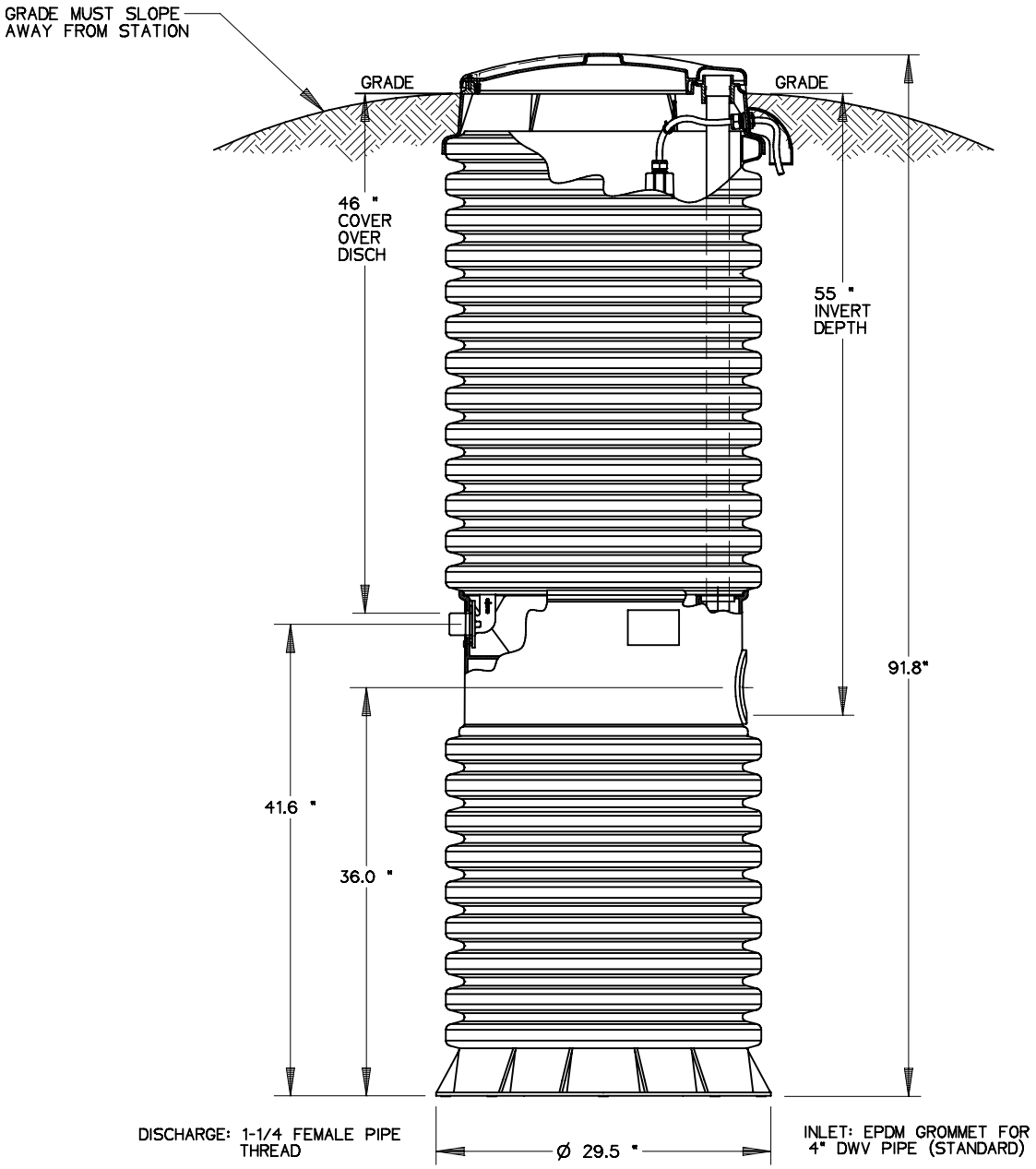


CONCRETE BALLAST MAY BE REQUIRED
SEE INSTALLATION INSTRUCTIONS
FOR DETAILS

| AD | CAH | 07/12/07 | A | 1/16 |
|---|---|---|---|---|
| DR BY | CHK'D | DATE | ISSUE | SCALE |

e one SEWER SYSTEMS

MODEL DH071-93 / DR071-93

NA0050P06

# OPTIONS : ☐ DH071-124 (HARD WIRED LEVEL CONTROLS)

# ☐ DR071-124 (WIRELESS LEVEL CONTROLS)

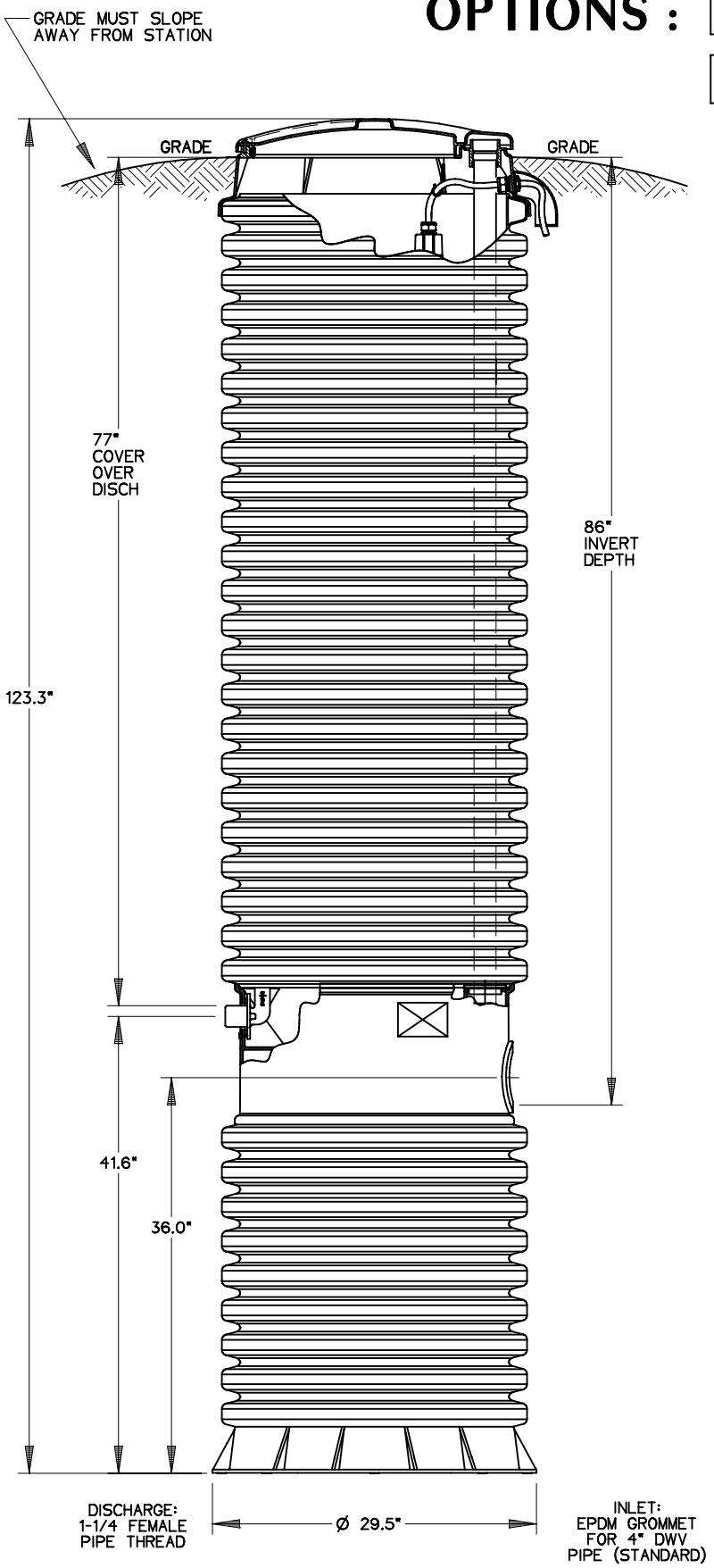


CONCRETE BALLAST MAY BE REQUIRED
SEE INSTALLATION INSTRUCTIONS
FOR DETAILS

| AD | CAH | 07/13/07 | A | 1/16 |
|---|---|---|---|---|
| DR BY | CHK'D | DATE | ISSUE | SCALE |

SEWER SYSTEMS

MODEL DH071-124 / DR071-124

NA0050P07

# OPTIONS : ☐ DH071-129 (HARD WIRED LEVEL CONTROLS)
# ☐ DR071-129 (WIRELESS LEVEL CONTROLS)

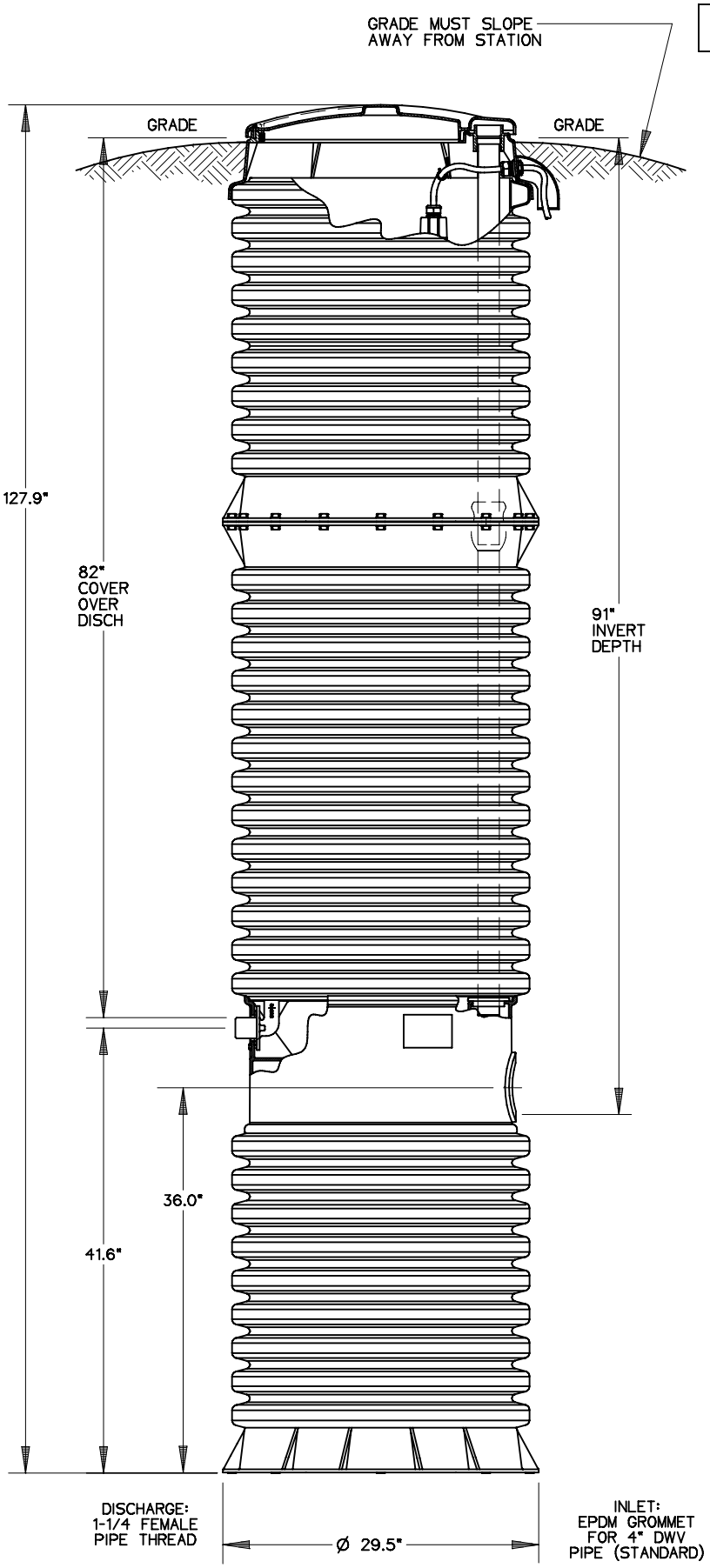


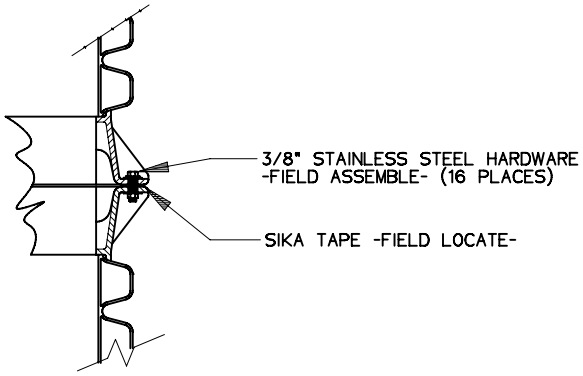


DETAIL, FIELD JOINT

SEE INSTALLATION INSTRUCTIONS FOR FURTHER DETAILS

CONCRETE BALLAST MAY BE REQUIRED SEE INSTALLATION INSTRUCTIONS FOR DETAILS

| AD | CAH | 07/13/07 | A | 1/16 |
|---|---|---|---|---|
| DR BY | CHK'D | DATE | ISSUE | SCALE |

e one SEWER SYSTEMS

MODEL DH071-129 / DR071-129

NA0050P08

# OPTIONS : ☐ DH071-158 (HARD WIRED LEVEL CONTROLS)
# ☐ DR071-158 (WIRELESS LEVEL CONTROLS)

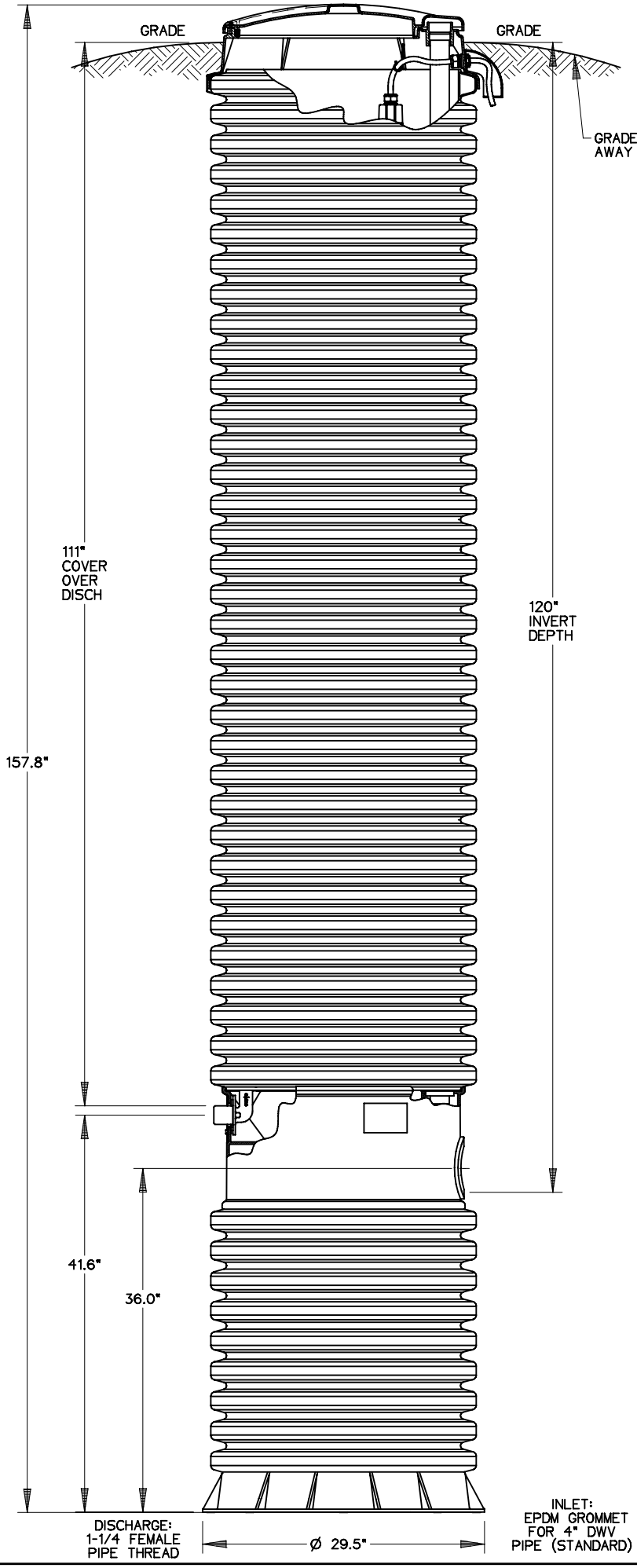


CONCRETE BALLAST MAY BE REQUIRED
SEE INSTALLATION INSTRUCTIONS
FOR DETAILS

| AD | CAH | 07/13/07 | A | 1/16 |
|---|---|---|---|---|
| DR BY | CHK'D | DATE | ISSUE | SCALE |

e one SEWER SYSTEMS

MODEL DH071-158 / DR071-158

NA0050P09

OPTIONS : ☐ DH071-160 (HARD WIRED LEVEL CONTROLS)

☐ DR071-160 (WIRELESS LEVEL CONTROLS)

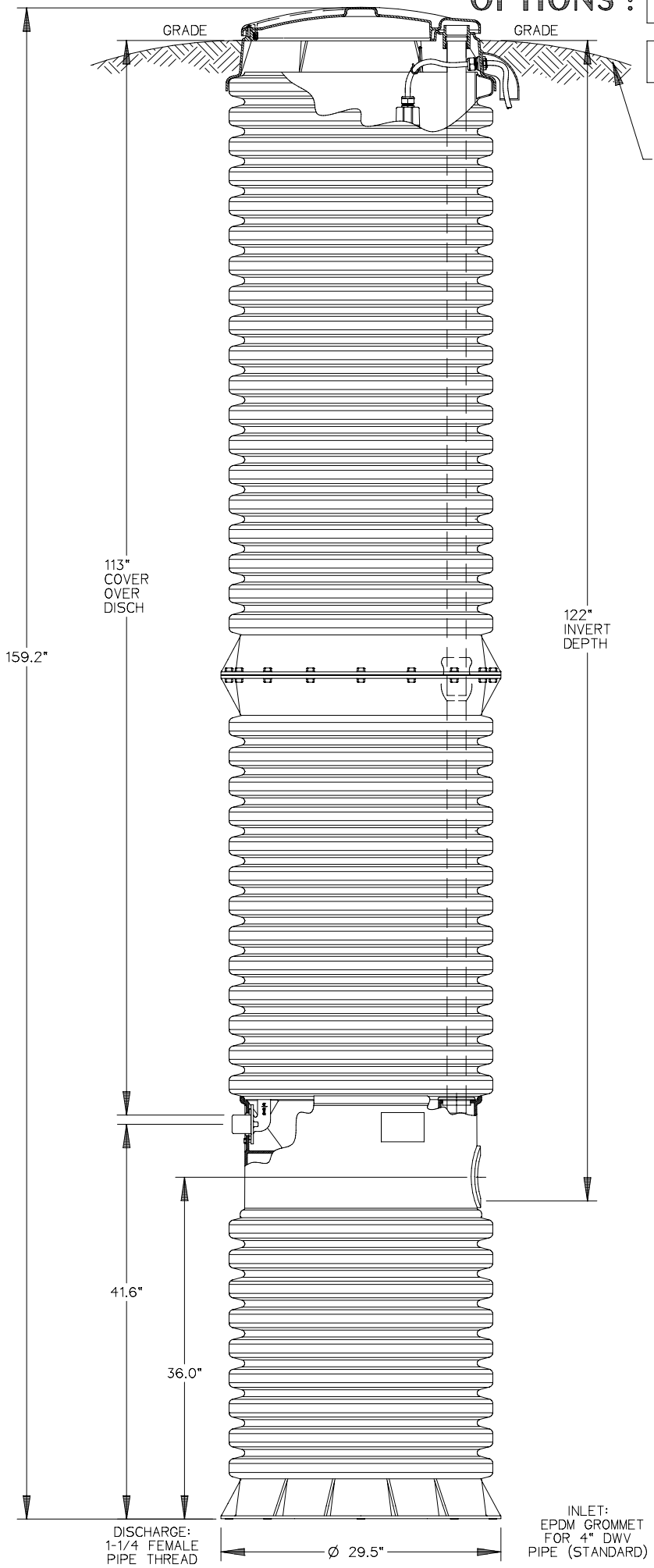


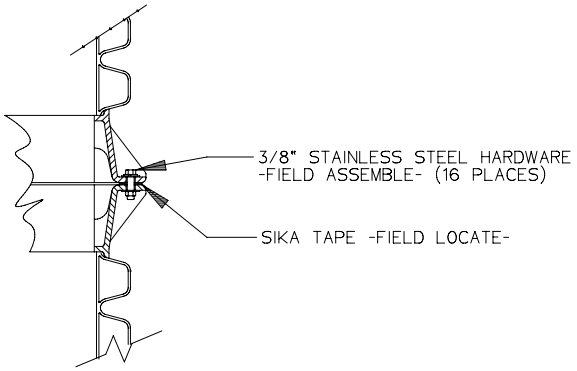


DETAIL, FIELD JOINT

SEE INSTALLATION INSTRUCTIONS FOR FURTHER DETAILS

CONCRETE BALLAST MAY BE REQUIRED SEE INSTALLATION INSTRUCTIONS FOR DETAILS

| AD | CAH | 07/13/07 | A | 1/16 |
|---|---|---|---|---|
| DR BY | CHK'D | DATE | ISSUE | SCALE |

e one SEWER SYSTEMS

MODEL DH071-160 / DR071-160

NA0050P10

# DH071-57

## BUILDERS MODEL

STRAIGHT DISCHARGE

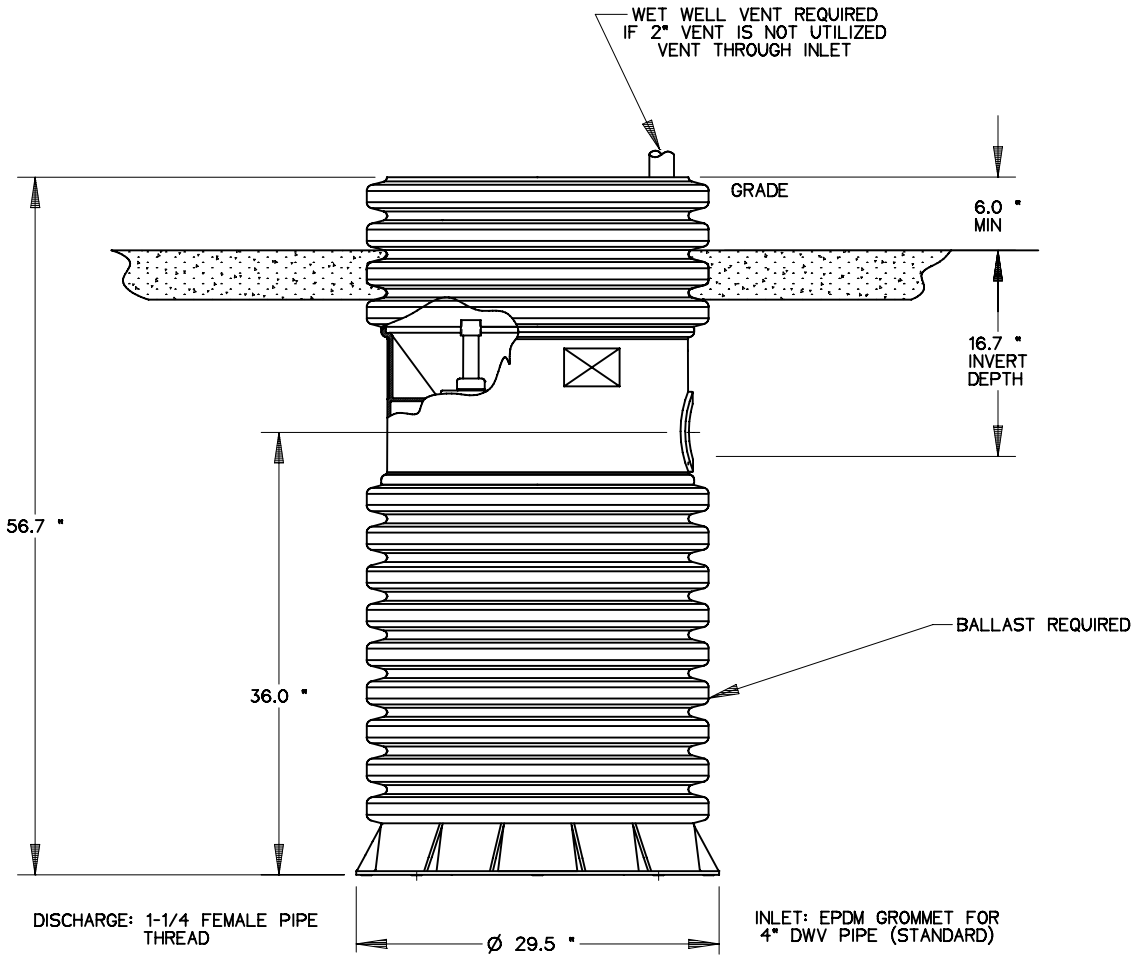


| AD | CAH | 04/26/07 | - | 1/16 |
|---|---|---|---|---|
| DR BY | CHK'D | DATE | ISSUE | SCALE |

SEWER SYSTEMS

MODEL DH071-57
BUILDERS

NA0050P11

# DH071-57

## BUILDERS MODEL

DISCHARGE VALVE

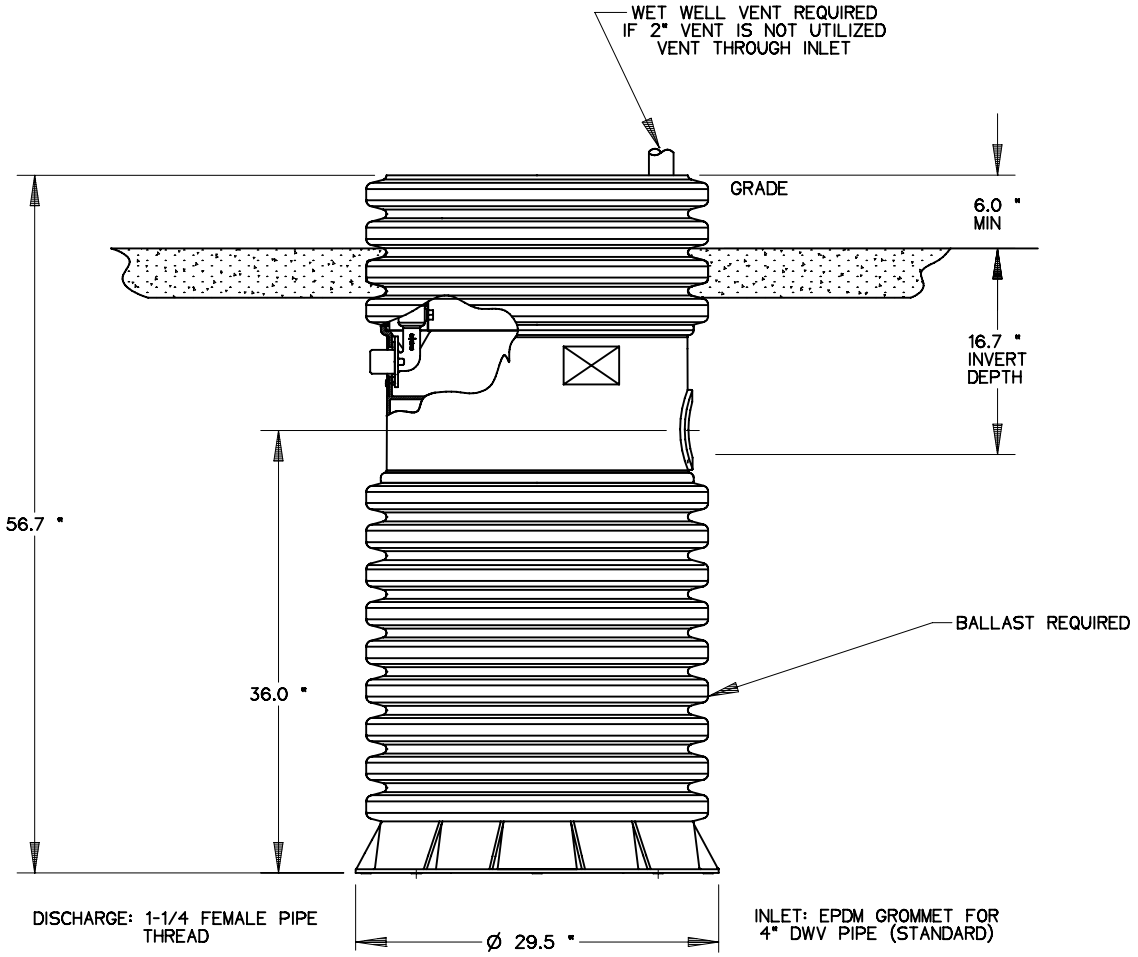


| AD | CAH | 04/26/07 | - | 1/16 |
|---|---|---|---|---|
| DR BY | CHK'D | DATE | ISSUE | SCALE |

SEWER SYSTEMS

MODEL DH071-57
BUILDERS

NA0050P12

# E|ONE SPD PUMP PERFORMANCE CURVE

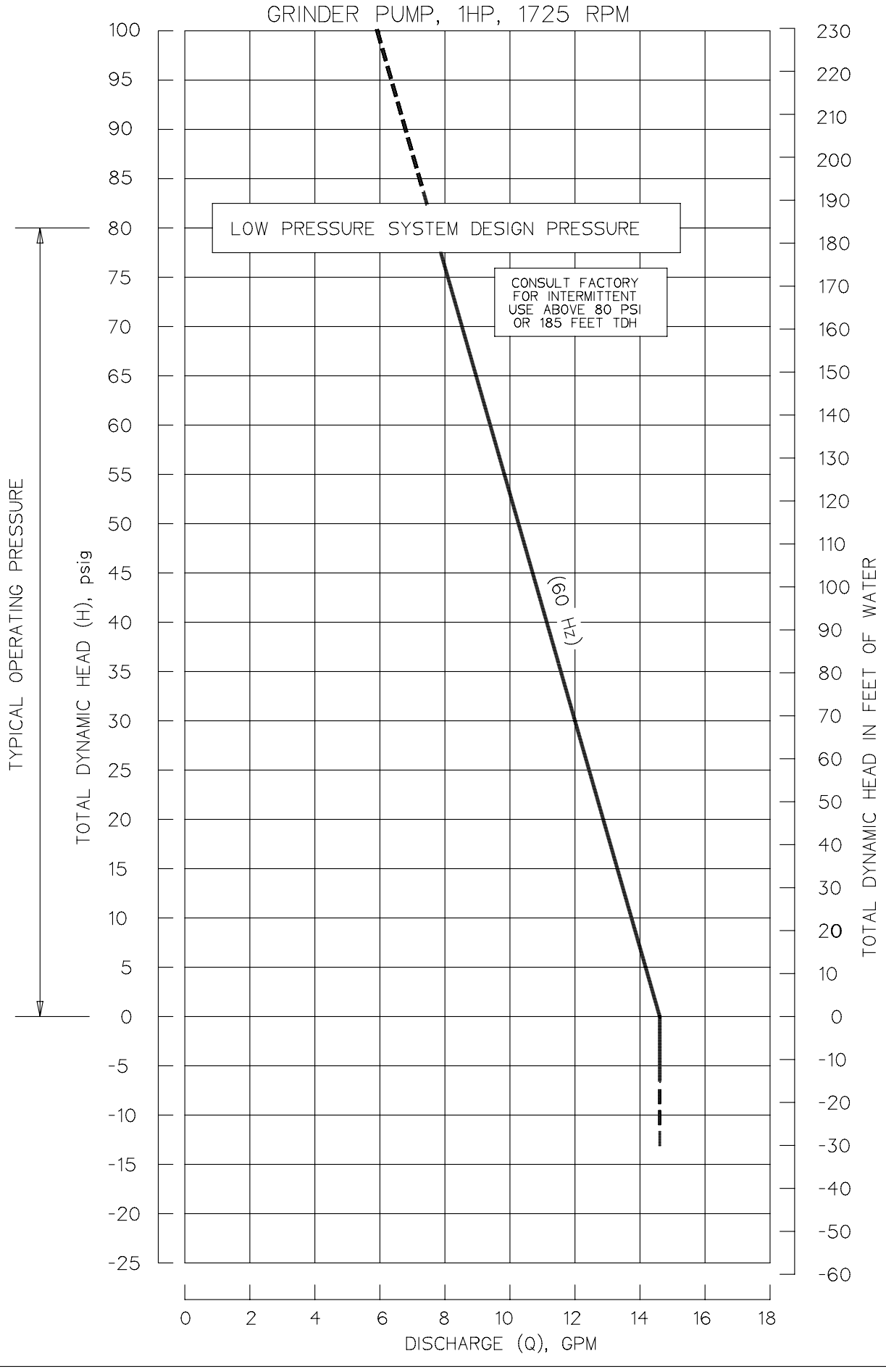

McCROMETER

# SPI Mag™

## Single Profile Insertion Flow Meter

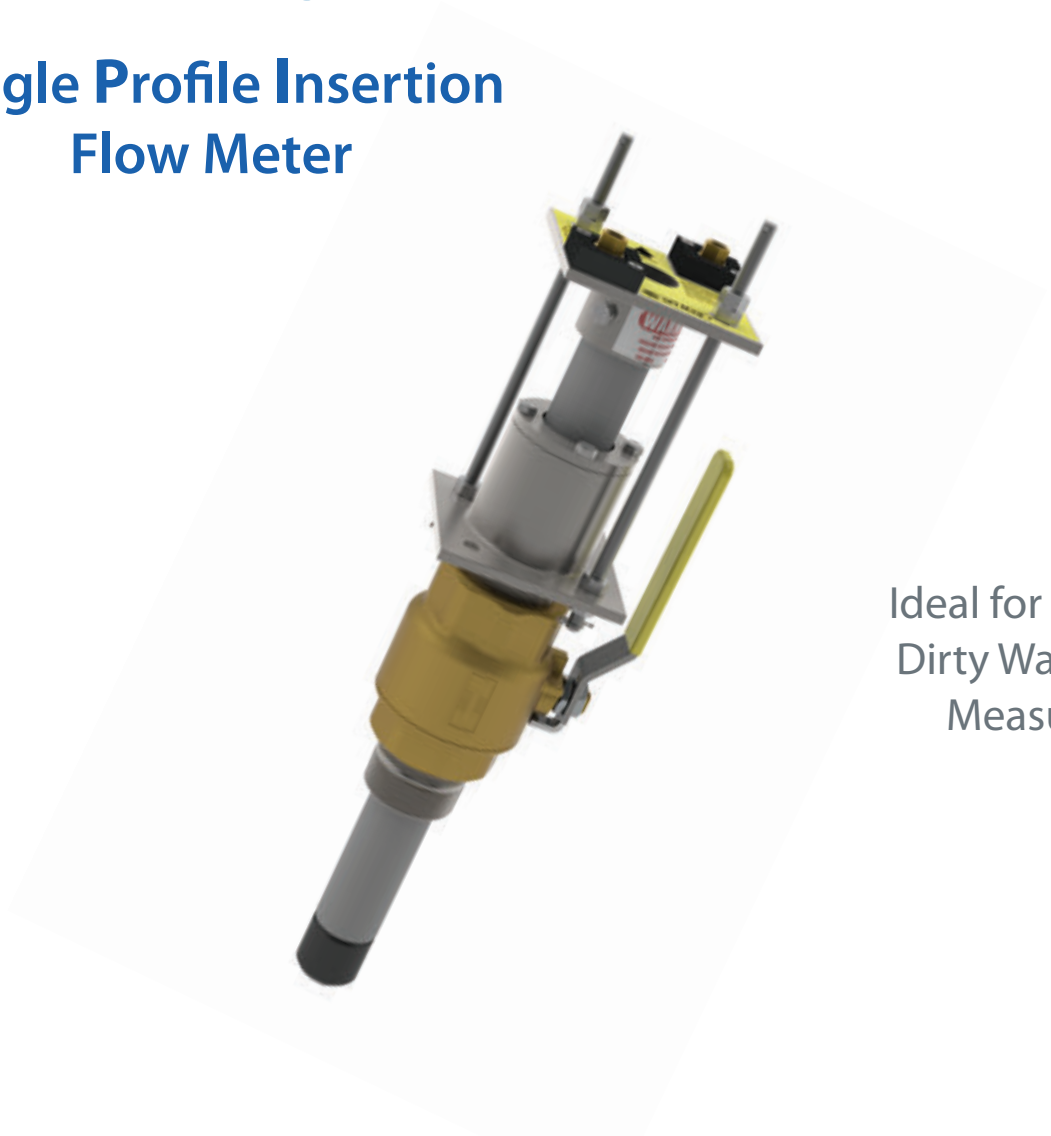

Ideal for Clean or Dirty Water Flow Measurement

Highly Cost-Effective Flow Solution

SPI Mag™

SPI Mag™

## Key SPI Mag Specs in Brief *

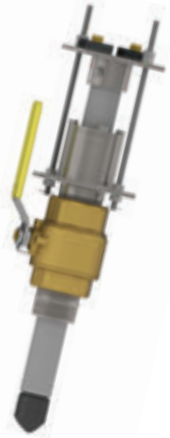

The SPI Mag Insertion Flow Meter provides a highly cost-effective solution for the accurate measurement of liquid flow in closed conduit, pressurized pipe applications. The SPI measures forward flow only and is suitable for line sizes from 2 to 96 inches. The SPI can be easily re-located to various line sizes.

- **Proven electromagnetic technology based on Faraday's Law**
- **Debris shedding, self-cleaning sensor eliminates costly maintenance**
- **Cost is independent of line size**
- **Easy Hot Tap Installation - no interruption of flow process**

The SPI Mag is suitable for municipal water and wastewater applications including:

- **Wastewater:** Effluent, Waste Activated Sludge (WAS), Return Activated Sludge (RAS), Reclaim / Recycle
- **Clean Water:** Raw Water Intake, Clear Wells

**The SPI Mag also reliably measures flow in many types of industrial flow processes involving conductive fluids such as potable water, slurries, sludge, cooling water, and pulp stock.**

## M-SERIES CONVERTER

The SPI Mag utilizes our pre-programmed M-Series Converter*:

- Curve-fitting algorithm to improve accuracy
- Dual 4-20 mA analog outputs
- RS485 port for easy connection to DCS
- 8 line graphical LCD display
- 3 key touch programming
- Rugged enclosure meets IP67

**See data sheet for complete specs and order information*

The SPI Mag is available with the following specs:

- **Range:** Nominal pipe size availability
- **Accuracy:** ±2% of reading ± 0.03 ft/s (± 0.009 m/s) zero stability from 0.3 to 32 ft/s velocity range (0.09 to 10m/s)
- **Pipe Sizes:** 2 - 96 inches (50 mm - 2,400 mm)
- Reverse flow indication

** See data sheet for complete specs and order information*

McCROMETER

**www.mccrometer.com**
3255 West Stetson Avenue, Hemet, CA 92545 USA
Phone 800 220-2279 | 951 652-6811 | Fax 951 652-3078

2013 McCrometer, Inc. All rights reserved Printed in USA Lit. No. 30120-58 Rev. 1.1/4-13

# Figure 517 ECO-Centric® Plug Valve

3” to 8” Direct Nut for Lever Operation
with Adjustable Shaft Packing

Data Sheet B517-DN.03

The Figure 517 Eccentric Plug Valve is a rugged, field-proven, quarter-turn valve that will provide decades of trouble-free service. The flow efficient round port provides lower head loss, greater solids handling ability, and easier “pigging” than a standard rectangular port plug valve. In addition, the epoxy coated ductile iron body and cover provides superior long term corrosion resistance. The rubber coated plug provides drop tight shutoff in both directions.

The ECO-Centric® Plug Valve can be supplied with ANSI Class 125/150 flanged ends for exposed installations or MJ ends for buried service.

### Product Features

- Flow efficient round port design
- Epoxy coated, high strength ductile iron body and cover
- Tough nickel body seat
- Bi-directional shutoff up to rated pressure
- Shaft packing is adjustable and replaceable without removing the cover (bonnet)

### Standard Materials

| | |
|---|---|
| • Body and Cover | Ductile Iron, ASTM A536, Grade 65-45-12 |
| • Body Seat | 95% Pure Nickel, Weld Overlaid onto Body |
| • Plug | Ductile Iron, ASTM A536 Grade 65-45-12 Buna-N Rubber Coated |
| • Shaft Bearings | Permanently Lubricated 316SS |
| • Thrust Bearings | Stainless Steel, Type 316 |
| • Grit Excluders | Buna-N |
| • External Fasteners | Zinc Plated Steel (Std. Exposed Service) 304SS (Std. Buried service) |

### Internal and External Coating

- Minimum 6 mil DFT Hi-Build Epoxy

### Standard Compliance

- AWWA C517

### Actuation

- Lever operator

### Options and Accessories

- 304 or 316 SS External Fasteners
- Chain Lever

### Ordering Data

- Valve Size
- Ends (Flanged or MJ)
- Options and accessories

### Product Application

| Size Range | AWWA C517 Pressure Rating | Max. Operating Pressure | Max. Operating Temperature | Hydrostatic Test Pressure | Seat Test Pressure |
|---|---|---|---|---|---|
| 3” to 8” | 175 PSI | 175 PSI | 180°F | 263 PSI | per AWWA C517 |

VAG USA, LLC • Phone: 724-776-1020 • Fax: 724-776-1254 • Email: info-us@vag-group.com • www.vag-usa.com

# Figure 517 ECO-Centric® Plug Valve

3” to 8” Direct Nut for Lever Operation
with Adjustable Shaft Packing

Data Sheet B517-DN.03

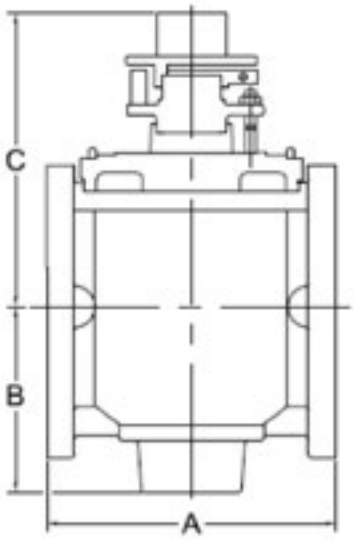


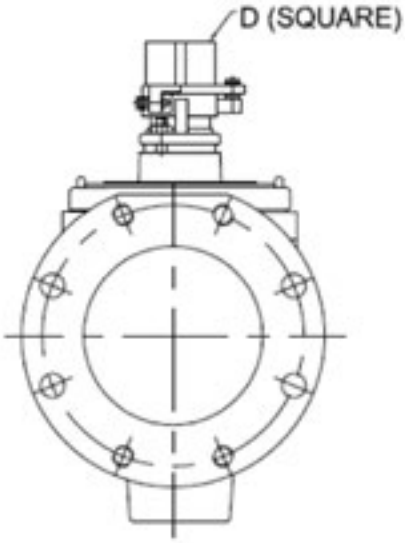


## Dimensions (inches)

| Size | A | | B | C | D | Approx. Weight (lbs) | |
|---|---|---|---|---|---|---|---|
| | Flanged | MJ | | | | Flanged | MJ |
| **3** | 8 | 11 ½ | 4 ½ | 8 ⅞ | 2 | 50 | 60 |
| **4** | 9 | 14 ¼ | 6 | 10 | 2 | 85 | 95 |
| **6** | 10 ½ | 15 ¾ | 6 ¾ | 10 ¾ | 2 | 125 | 140 |
| **8** | 11 ½ | 17 ⅜ | 9 ¾ | 14 | 2 | 230 | 255 |

Notes:
1. Flanges are faced and drilled per ANSI B16.1.1 Class 125.
2. Mechanical joint ends per ANSI/AWWA A21.1/C111.
3. EN 1092 PN16 and AS4087 Class 16 Flanges are available. Consult factory.
4. Dimensions and weights are approximate, request certified drawings if critical.
5. Temperature Rating: Maximum 180°F (82°C).

VAG USA, LLC • Phone: 724-776-1020 • Fax: 724-776-1254
Email: info-us@vag-group.com • www.vag-usa.com

©Copyright VAG USA, LLC 2016
Specifications subject to change without notice

# APPENDIX C

Engineering Report Certification

## Engineering Report Certification

### To Be Provided by the Professional Engineer Preparing the Report

During the preparation of this Engineering Report, I have studied and evaluated the cost and effectiveness of the processes, materials, techniques, and technologies for carrying out the proposed project or activity for which assistance is being sought from the New York State Clean Water State Revolving Fund. In my professional opinion, I have recommended for selection, to the maximum extent practicable, a project or activity that maximizes the potential for efficient water use, reuse, recapture, and conservation, and energy conservation, taking into account the cost of constructing the project or activity, the cost of operating and maintaining the project or activity over the life of the project or activity, and the cost of replacing the project and activity.

Title of Engineering Report: Incorporated Village of Westhampton Beach Sewer Collection and Conveyance System (Phase 1 Sewer Service Area) Connection to Suffolk County Sewer District No. 24 VOLUME 1

Date of Report: July 2018

Professional Engineer's Name:

Signature:

Date:

# APPENDIX D

Smart Growth Assessment

NEW YORK STATE OF OPPORTUNITY. | Department of Health | Environmental Facilities Corporation

# Smart Growth Assessment Form

This form should be completed by the applicant's project engineer or other design professional.[1]

## Applicant Information

Applicant: Inc. Village of Westhampton Beach Project No.: WHBV1801

Project Name: Incorporated Village of Westhampton Beach Sewer Collection and Conveyance System Connection to SCSD #24

Is project construction complete? ☐ Yes, date: ☑ No

Project Summary: (provide a short project summary in plain language including the location of the area the project serves)

Construct sanitary wastewater collection and conveyance infrastructure within the Phase 1 service area in the Village of Westhampton Beach to connect 60,000 GPD to SCSD#24

## Section 1 – Screening Questions

### 1. Prior Approvals

1A. Has the project been previously approved for EFC financial assistance? ☑ Yes ☐ No

1B. If so, what was the project number(s) for the prior approval(s)? Project No.: WHBV1601

Is the scope of the project substantially the same as that which was approved? ☑ Yes ☐ No

IF THE PROJECT WAS PREVIOUSLY APPROVED BY EFC'S BOARD AND THE SCOPE OF THE PROJECT HAS NOT MATERIALLY CHANGED, THE PROJECT IS **NOT** SUBJECT TO SMART GROWTH REVIEW. SKIP TO SIGNATURE BLOCK.

### 2. New or Expanded Infrastructure

2A. Does the project add new wastewater collection/new water mains or a new wastewater treatment system/water treatment plant? ☑ Yes ☐ No

***Note: A new infrastructure project adds wastewater collection/water mains or a wastewater treatment/water treatment plant where none existed previously***

2B. Will the project result in either: ☐ Yes ☑ No

An increase of the State Pollutant Discharge Elimination System (SPDES) permitted flow capacity for an existing treatment system;

**OR**

An increase such that a NYSDEC water withdrawal permit will need to be obtained or modified, or result in the NYSDOH approving an increase in the capacity of the water treatment plant?

***Note: An expanded infrastructure project results in an increase of the SPDES permitted flow capacity for the wastewater treatment system, or an increase of the permitted water withdrawal or the permitted flow capacity for the water treatment system.***

[1] If project construction is complete and the project was not previously financed through EFC, an authorized municipal representative may complete and sign this assessment.

IF THE ANSWER IS "NO" TO BOTH "2A" and "2B" ON THE PREVIOUS PAGE, THE PROJECT IS NOT SUBJECT TO FURTHER SMART GROWTH REVIEW. SKIP TO SIGNATURE BLOCK.

**3. Court or Administrative Consent Orders**

3A. Is the project expressly required by a court or administrative consent order? ☐ Yes ☐ No

3B. If so, have you previously submitted the order to NYS EFC or DOH? If not, please attach. ☐ Yes ☐ No

## Section 2 – Additional Information Needed for Relevant Smart Growth Criteria

EFC has determined that the following smart growth criteria are relevant for EFC-funded projects and that projects must meet each of these criteria to the extent practicable:

**1. Uses or Improves Existing Infrastructure**

1A. Does the project use or improve existing infrastructure? ☐ Yes ☐ No

Please describe:

**2. Serves a Municipal Center**

Projects must serve an area in either 2A, 2B or 2C to the extent practicable.

2A. Does the project serve an area **limited** to one or more of the following municipal centers?

i. A City or incorporated Village ☐Yes ☐No

ii. A central business district ☐Yes ☐No

iii. A main street ☐Yes ☐No

iv. A downtown area ☐Yes ☐No

v. A Brownfield Opportunity Area ☐Yes ☐No
(for more information, go to www.dos.ny.gov & search "Brownfield")

vi. A downtown area of a Local Waterfront Revitalization Program Area ☐Yes ☐No
(for more information, go to www.dos.ny.gov and search "Waterfront Revitalization")

vii. An area of transit-oriented development ☐Yes ☐No

viii. An Environmental Justice Area ☐Yes ☐No
(for more information, go to www.dec.ny.gov/public/899.html)

ix. A Hardship/Poverty Area ☐Yes ☐No
***Note: Projects that primarily serve census tracts and block numbering areas with a poverty rate of at least twenty percent according to the latest census data***

Please describe all selections:

2B. If the project serves an area located outside of a municipal center, does it serve an area located adjacent to a municipal center which has clearly defined borders, designated for concentrated development in a municipal or regional comprehensive plan and exhibit strong land use, transportation, infrastructure and economic connections to an existing municipal center? ☐Yes ☐No

Please describe:

2C. If the project is not located in a municipal center as defined above, is the area designated by a comprehensive plan and identified in zoning ordinance as a future municipal center? ☐Yes ☐No

Please describe and reference applicable plans:

**3. Resiliency Criteria**

3A. Was there consideration of future physical climate risk due to sea-level rise, storm surge, and/or flooding during the planning of this project? ☐Yes ☐No

Please describe:

**Signature Block:** By entering your name in the box below, you agree that you are authorized to act on behalf of the applicant and that the information contained in this Smart Growth Assessment is true, correct and complete to the best of your knowledge and belief.

| Applicant: Inc. Village of Westhampton Beach | Phone Number: |
|---|---|
| | |
| (Name & Title of Project Engineer or Design Professional or Authorized Municipal Representative) | |
| | |
| (Signature) | (Date) |

# APPENDIX E

Preliminary Gravity Sewer System Plan & Profiles

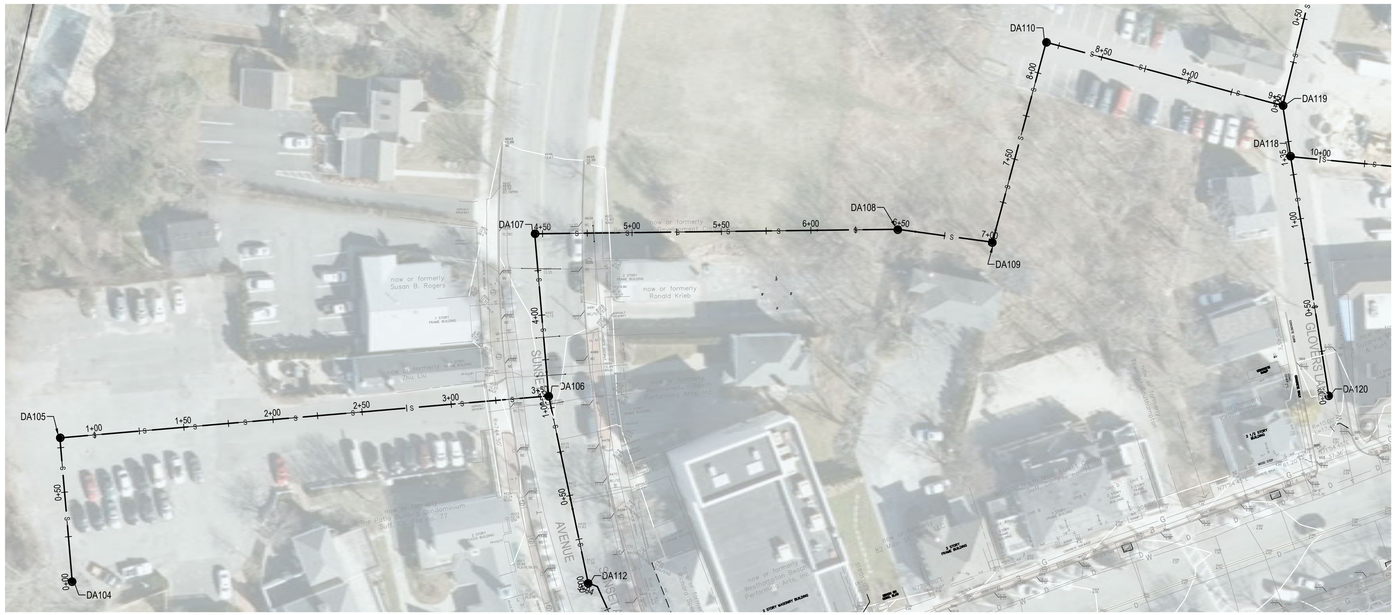


## North Gravity Sewer Plan (STA. 0+00 to 9+54)

SCALE: 1"= 40'-0"

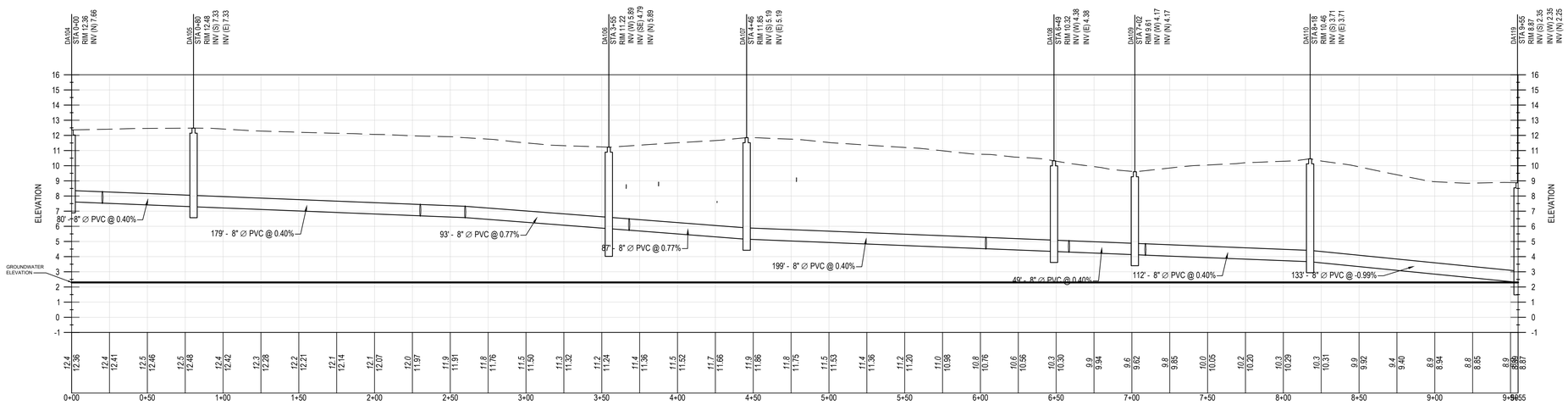


**PROFILE VIEW OF Main Street North Gravity Sewer**
**VERTICAL SCALE: 1" = 2**
**HORIZONTAL SCALE: 1" = 20**


H2M
538 Broad Hollow Road, 4th Floor East
Melville, NY 11747
631.756.8000 • www.h2m.com


CONSULTANTS:

| MARK | DATE | DESCRIPTION |
|---|---|---|
| | | |

"ALTERATION OF THIS DOCUMENT EXCEPT BY A LICENSED PROFESSIONAL IS ILLEGAL"

| DESIGNED BY: | DRAWN BY: | CHECKED BY: | REVIEWED BY: |
|---|---|---|---|
| | | | |

| PROJECT No.: | DATE: | SCALE: |
|---|---|---|
| WHBV 18-01 | MAY 2018 | AS SHOWN |

CLIENT
**Village of Westhampton Beach**

**Collection System Preliminary Design**

**Suffolk County, NY**

CONTRACT
**ALL CONTRACTS**

STATUS
**NOT FOR CONSTRUCTION**

SHEET TITLE
**NORTH GRAVITY SEWER PLAN&PROFILE (STA 0+00 TO 9+55)**

DRAWING No.

SHEET No.
OF

C:\Users\sgovernale\appdata\local\temp\AcPublish_15120\FIGURES.dwg Last Modified: May 08, 2018 - 5:46pm Plotted on: May 29, 2018 - 12:54pm By sgovernale

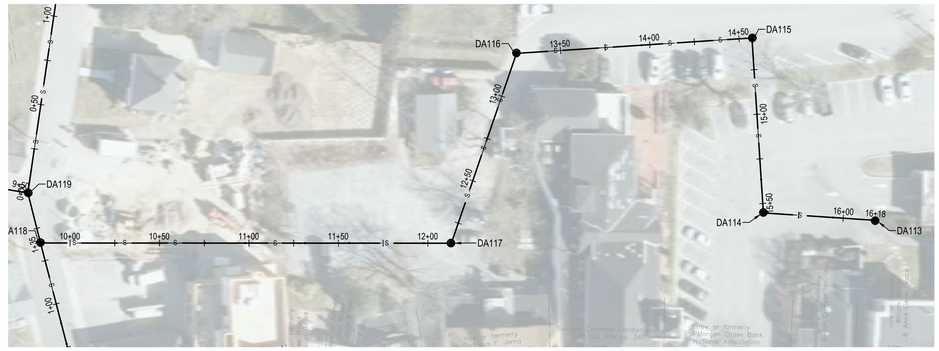


## North Gravity Sewer Plan (STA. 9+54 to 16+18)

SCALE: 1"= 40'-0"

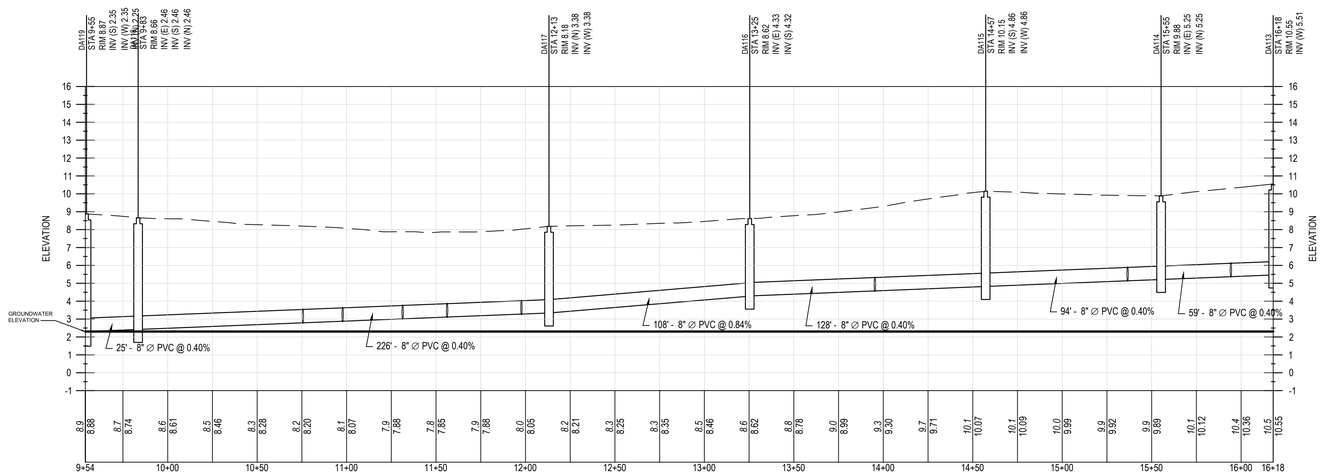


**PROFILE VIEW OF Main Street North Gravity Sewer**
**VERTICAL SCALE: 1" = 2**
**HORIZONTAL SCALE: 1" = 20**


H2M
538 Broad Hollow Road, 4th Floor East
Melville, NY 11747
631.756.8000 • www.h2m.com


CONSULTANTS:

| MARK | DATE | DESCRIPTION |
|---|---|---|
| | | |

"ALTERATION OF THIS DOCUMENT EXCEPT BY A LICENSED PROFESSIONAL IS ILLEGAL"

| DESIGNED BY: | DRAWN BY: | CHECKED BY: | REVIEWED BY: |
|---|---|---|---|
| | | | |

| PROJECT No.: | DATE: | SCALE: |
|---|---|---|
| WHBV 18-01 | MAY 2018 | AS SHOWN |

CLIENT
**Village of Westhampton Beach**

**Collection System Preliminary Design**

**Suffolk County, NY**

CONTRACT
**ALL CONTRACTS**

STATUS
**NOT FOR CONSTRUCTION**

SHEET TITLE
**NORTH GRAVITY SEWER PLAN&PROFILE (STA 9+55 TO 16+18)**

DRAWING No.

SHEET No.
OF

C:\Users\sgovernale\appdata\local\temp\AcPublish_15120\FIGURES.dwg Last Modified: May 08, 2018 - 5:46pm Plotted on: May 29, 2018 - 12:50pm By sgovernale

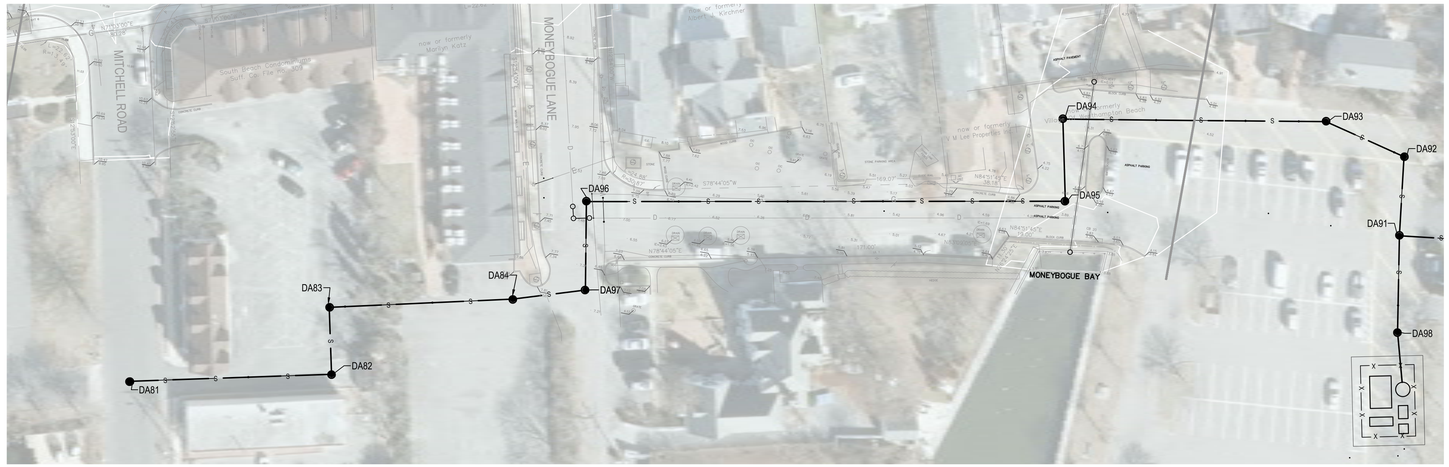


## South Gravity Sewer Plan (STA. 0+00 to 8+98)

SCALE: 1"= 40'-0"

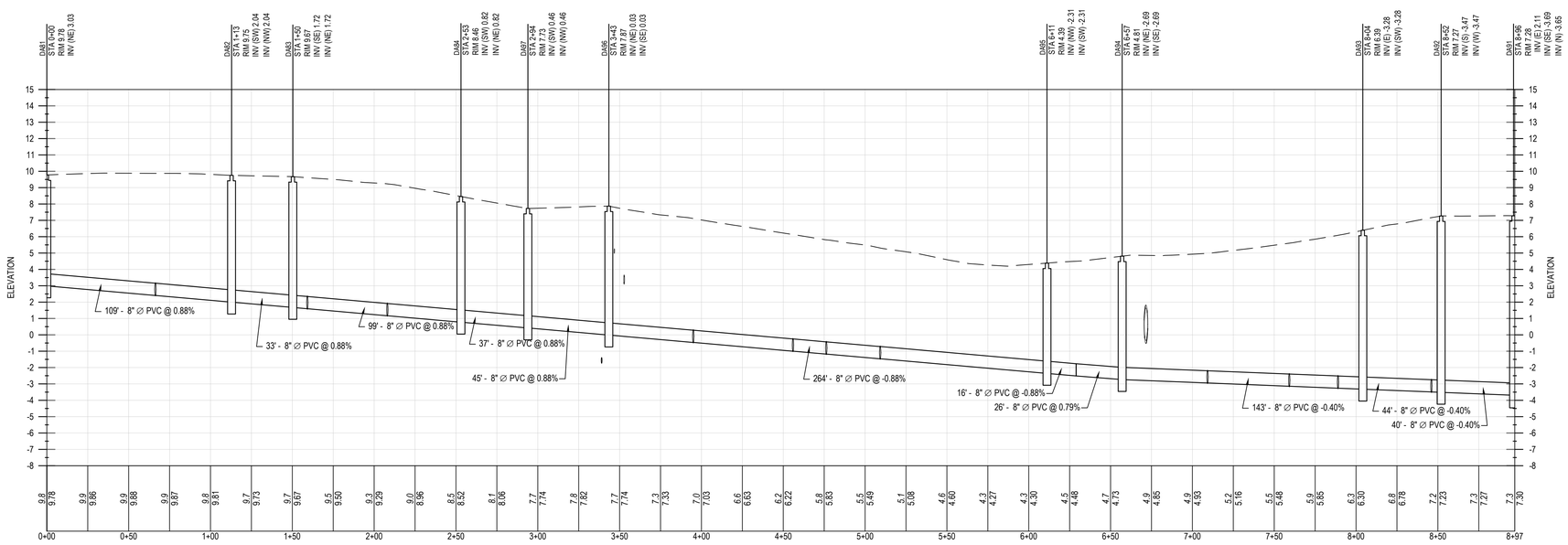


**PROFILE VIEW OF Main Street South Gravity Sewer**
**VERTICAL SCALE: 1" = 2**
**HORIZONTAL SCALE: 1" = 20**


H2M
538 Broad Hollow Road, 4th Floor East
Melville, NY 11747
631.756.8000 • www.h2m.com


CONSULTANTS:

| MARK | DATE | DESCRIPTION |
|---|---|---|
| | | |

"ALTERATION OF THIS DOCUMENT EXCEPT BY A LICENSED PROFESSIONAL IS ILLEGAL"

| DESIGNED BY: | DRAWN BY: | CHECKED BY: | REVIEWED BY: |
|---|---|---|---|
| | | | |

| PROJECT No.: | DATE: | SCALE: |
|---|---|---|
| WHBV 18-01 | MAY 2018 | AS SHOWN |

CLIENT
**Village of Westhampton Beach**

**Collection System Preliminary Design**

**Suffolk County, NY**

CONTRACT
**ALL CONTRACTS**

STATUS
**NOT FOR CONSTRUCTION**

SHEET TITLE
**SOUTH GRAVITY SEWER PLAN&PROFILE (STA 0+00 TO 8+97)**

DRAWING No.

SHEET No.
OF

C:\Users\agovemale\appdata\local\temp\AcPublish_15120\FIGURES.dwg Last Modified: May 08, 2018 - 5:48pm Plotted on: May 29, 2018 - 12:35pm By agovemale

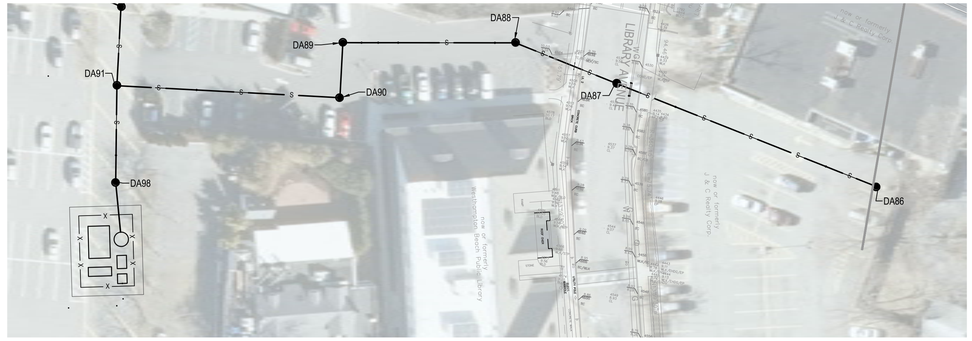


## South Gravity Sewer Plan (STA. 8+98 to 13+65)

SCALE: 1"= 40'-0"

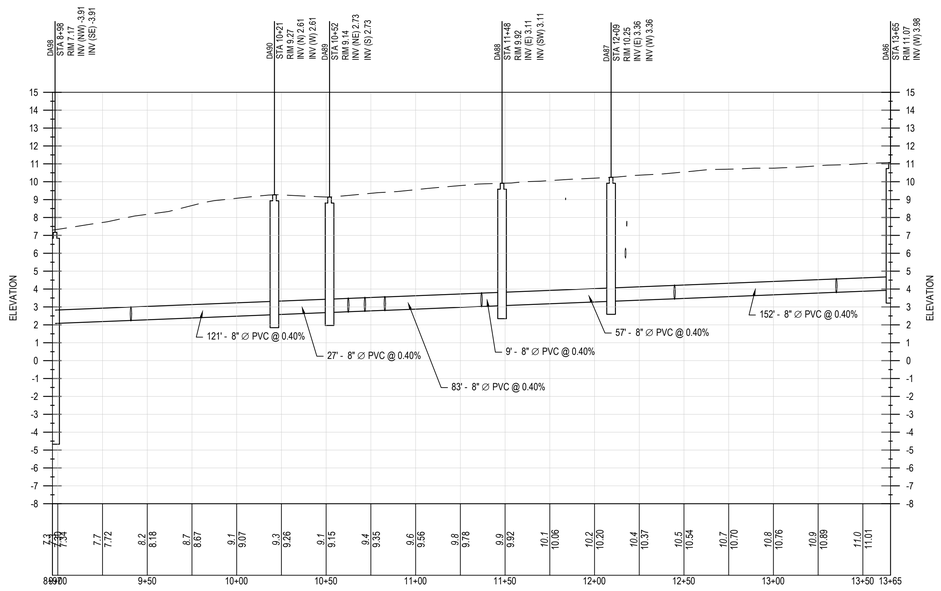


**PROFILE VIEW OF Main Street South Gravity Sewer**
**VERTICAL SCALE: 1" = 2**
**HORIZONTAL SCALE: 1" = 20**


H2M

538 Broad Hollow Road, 4th Floor East
Melville, NY 11747
631.756.8000 • www.h2m.com


CONSULTANTS:

| MARK | DATE | DESCRIPTION |
|---|---|---|
| | | |

"ALTERATION OF THIS DOCUMENT EXCEPT BY A LICENSED PROFESSIONAL IS ILLEGAL"

| DESIGNED BY: | DRAWN BY: | CHECKED BY: | REVIEWED BY: |
|---|---|---|---|
| | | | |

| PROJECT No.: | DATE: | SCALE: |
|---|---|---|
| WHBV 18-01 | MAY 2018 | AS SHOWN |

CLIENT
**Village of Westhampton Beach**

**Collection System Preliminary Design**

**Suffolk County, NY**

CONTRACT
**ALL CONTRACTS**

STATUS
**NOT FOR CONSTRUCTION**

SHEET TITLE
**NORTH GRAVITY SEWER PLAN&PROFILE (STA 8+97 TO 13+65)**

DRAWING No.

SHEET No.
OF

C:\Users\governmentpostal\localtemp\AcPublish_15120\FIGURES.dwg Last Modified: May 08, 2018 - 5:46pm Plotted on: May 29, 2018 - 1:00pm By: ggovernmate

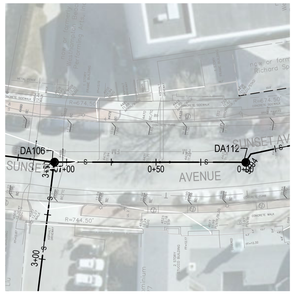


**Sunset Avenue Plan**
SCALE: 1"= 40'-0"

**Glovers Lane Plan**
SCALE: 1"= 40'-0"

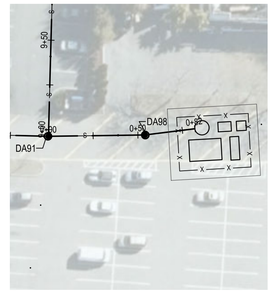


**South Gravity Sewer to PS Plan**
SCALE: 1"= 40'-0"

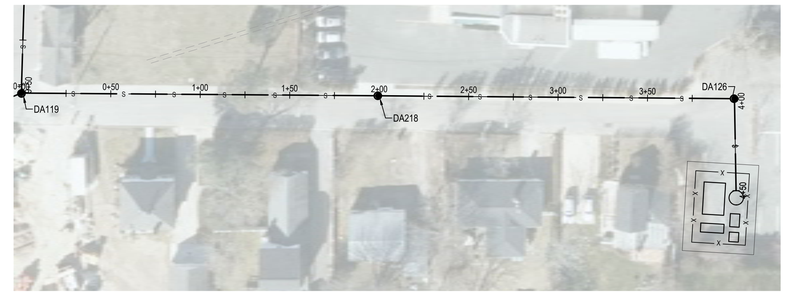


**North Gravity Sewer to PS Plan**
SCALE: 1"= 40'-0"

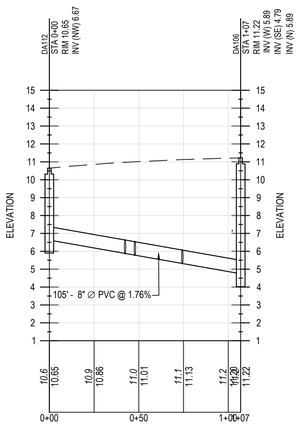


**PROFILE VIEW OF Main Street North Gravity Sewer Sunset Ave Lateral**
**VERTICAL SCALE: 1" = 2**
**HORIZONTAL SCALE: 1" = 20**

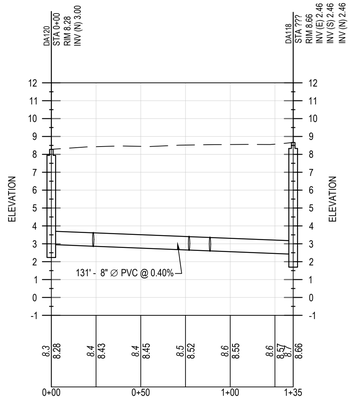


**PROFILE VIEW OF Main Street North Gravity Sewer Glovers Lane Lateral**
**VERTICAL SCALE: 1" = 2**
**HORIZONTAL SCALE: 1" = 20**

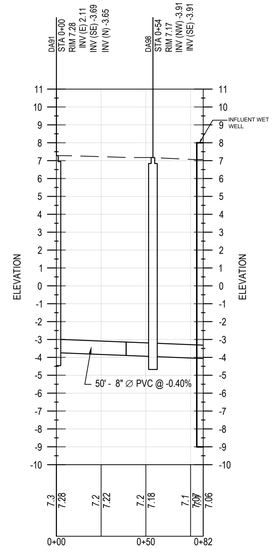


**PROFILE VIEW OF Main Street South Gravity Sewer to PS**
**VERTICAL SCALE: 1" = 2**
**HORIZONTAL SCALE: 1" = 20**

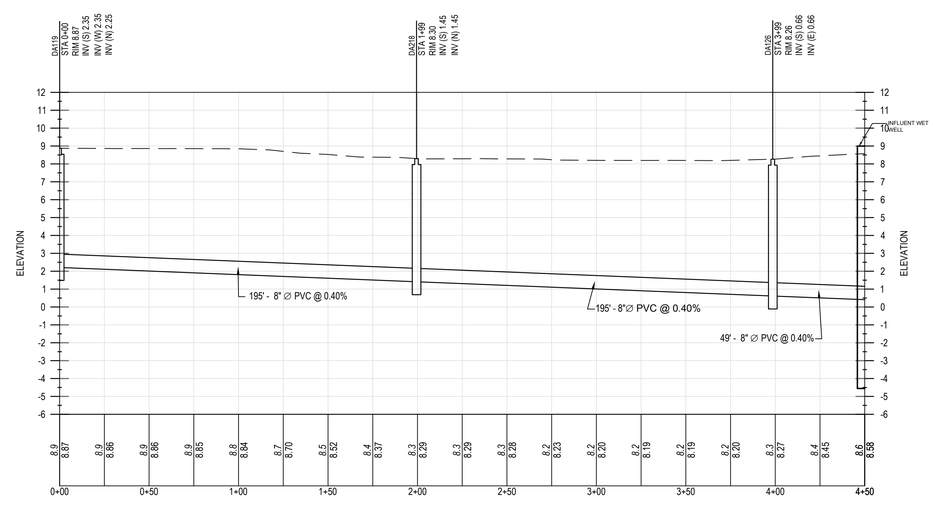


**PROFILE VIEW OF Main Street North Gravity Sewer to PS**
**VERTICAL SCALE: 1" = 2**
**HORIZONTAL SCALE: 1" = 20**


H2M
538 Broad Hollow Road, 4th Floor East
Melville, NY 11747
631.756.8000 • www.h2m.com


CONSULTANTS:

| MARK | DATE | DESCRIPTION |
|---|---|---|
| | | |

"ALTERATION OF THIS DOCUMENT EXCEPT BY A LICENSED PROFESSIONAL IS ILLEGAL"

| DESIGNED BY: | DRAWN BY: | CHECKED BY: | REVIEWED BY: |
|---|---|---|---|
| | | | |

| PROJECT No.: | DATE: | SCALE: |
|---|---|---|
| WHBV 18-01 | MAY 2018 | AS SHOWN |

CLIENT
**Village of Westhampton Beach**

**Collection System Preliminary Design**

**Suffolk County, NY**

CONTRACT
**ALL CONTRACTS**

STATUS
**NOT FOR CONSTRUCTION**

SHEET TITLE
**GRAVITY SEWER EXTENSIONS PLAN&PROFILE**

DRAWING No.

SHEET No.
OF

C:\Users\governale\appdata\local\temp\AcPublish_15120\FIGURES.dwg Last Modified: May 08, 2018 - 3:48pm Plotted on: May 29, 2018 - 1:06pm By: tgovernale

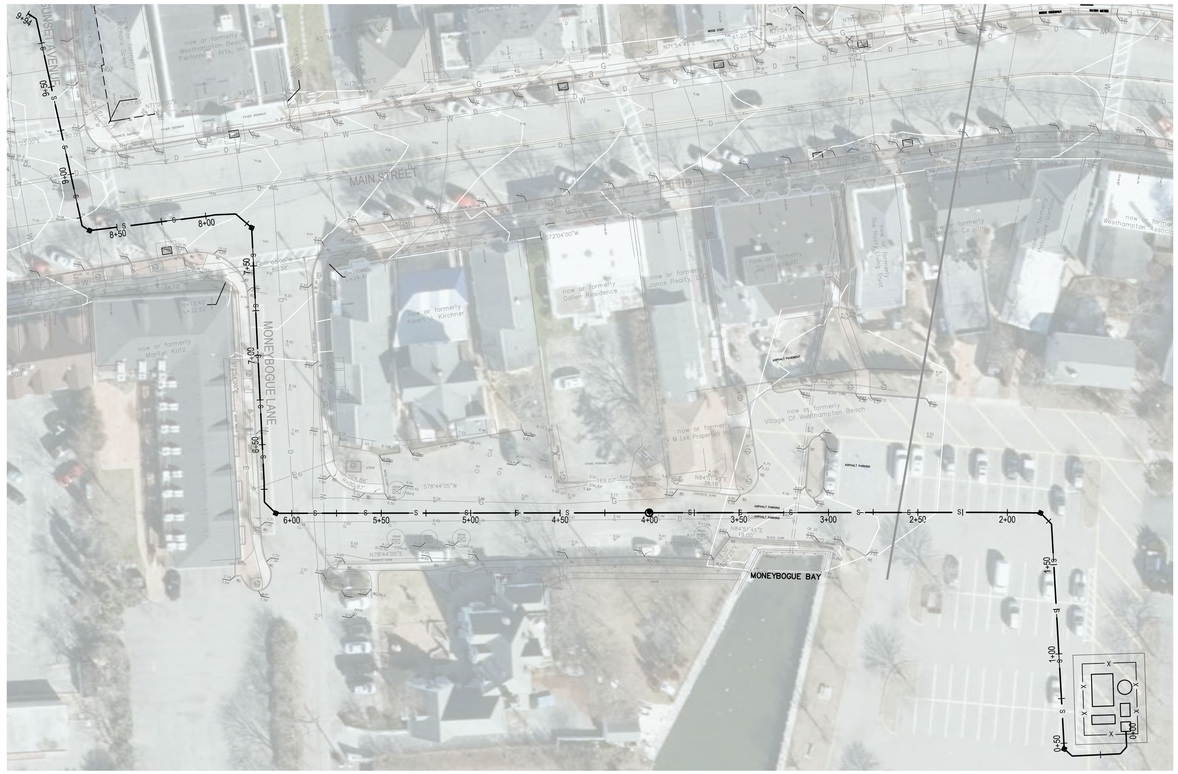


## South PS Efflunt FM Plan

SCALE: 1"= 40'-0"

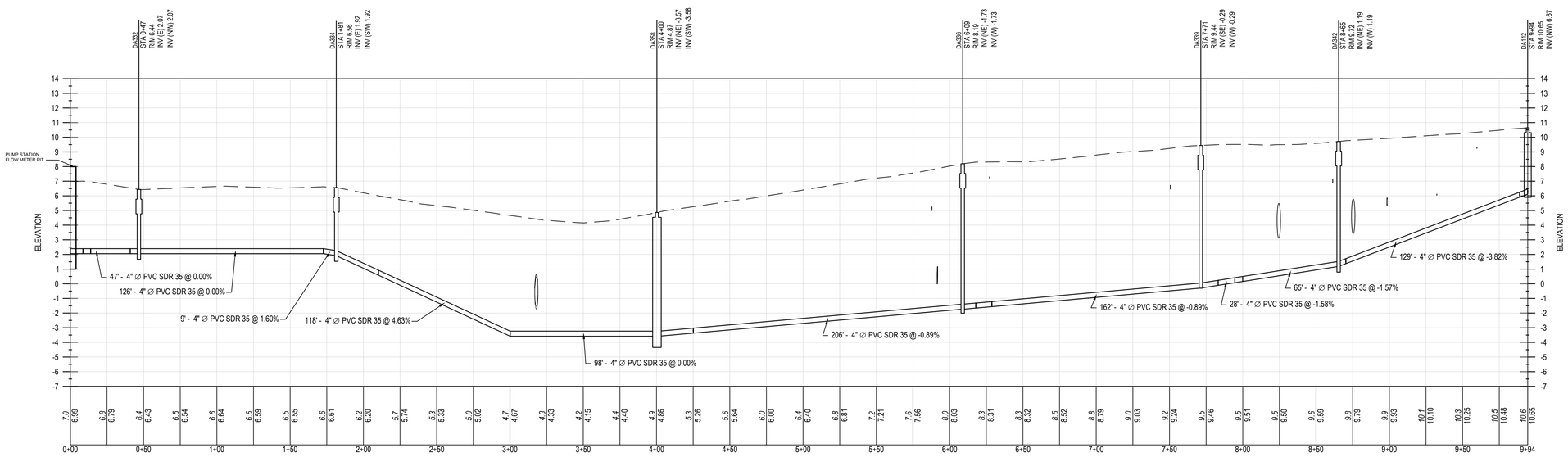


**PROFILE VIEW OF South PS FM**
**VERTICAL SCALE: 1" = 2**
**HORIZONTAL SCALE: 1" = 20**


H2M

538 Broad Hollow Road, 4th Floor East
Melville, NY 11747
631.756.8000 • www.h2m.com


CONSULTANTS:

| MARK | DATE | DESCRIPTION |
|---|---|---|
| | | |

"ALTERATION OF THIS DOCUMENT EXCEPT BY A LICENSED PROFESSIONAL IS ILLEGAL"

| DESIGNED BY: | DRAWN BY: | CHECKED BY: | REVIEWED BY: |
|---|---|---|---|
| | | | |

| PROJECT No.: | DATE: | SCALE: |
|---|---|---|
| WHBV 18-01 | MAY 2018 | AS SHOWN |

CLIENT
**Village of Westhampton Beach**

**Collection System Preliminary Design**

**Suffolk County, NY**

CONTRACT
**ALL CONTRACTS**

STATUS
**NOT FOR CONSTRUCTION**

SHEET TITLE
**SOUTH PUMP STATION EFFLUENT FORCE MAIN PLAN&PROFILE**

DRAWING No.

SHEET No.
OF

C:\Users\governmale\appdata\local\temp\AcPublish_15120\FIGURES.dwg Last Modified: May 08, 2018 - 3:48pm Plotted on: May 29, 2018 - 1:10pm By: tgovernmale

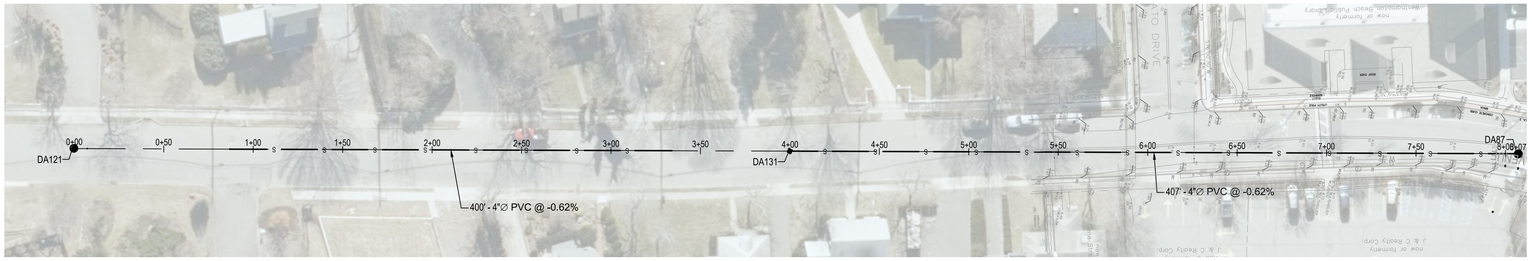


## East LPS Plan

SCALE: 1"= 40'-0"

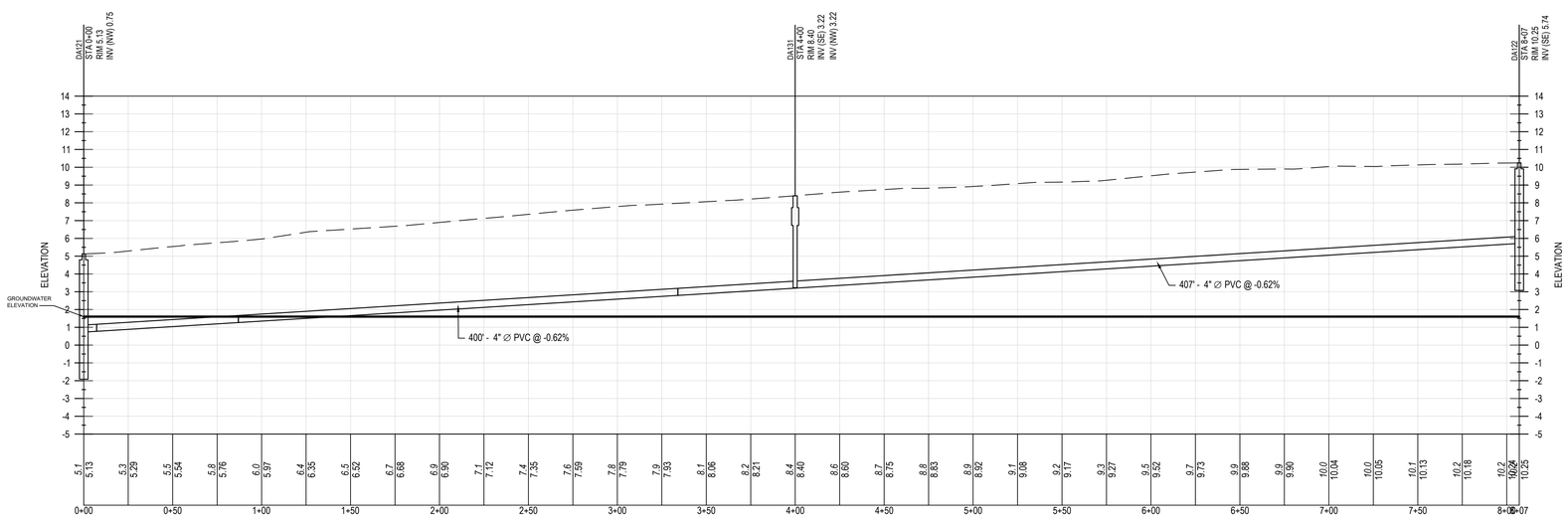


**PROFILE VIEW OF Main Street East LPS**
**VERTICAL SCALE: 1" = 2**
**HORIZONTAL SCALE: 1" = 20**


H2M

538 Broad Hollow Road, 4th Floor East
Melville, NY 11747
631.756.8000 • www.h2m.com


CONSULTANTS:

| MARK | DATE | DESCRIPTION |
|---|---|---|
| | | |

"ALTERATION OF THIS DOCUMENT EXCEPT BY A LICENSED PROFESSIONAL IS ILLEGAL"

| DESIGNED BY: | DRAWN BY: | CHECKED BY: | REVIEWED BY: |
|---|---|---|---|
| | | | |

| PROJECT No.: | DATE: | SCALE: |
|---|---|---|
| WHBV 18-01 | MAY 2018 | AS SHOWN |

CLIENT
**Village of Westhampton Beach**

**Collection System Preliminary Design**

**Suffolk County, NY**

CONTRACT
**ALL CONTRACTS**

STATUS
**NOT FOR CONSTRUCTION**

SHEET TITLE
**EAST LPS PLAN&PROFILE**

DRAWING No.

SHEET No.
OF

C:\Users\sgarvente\appdata\local\temp\AcPublish_13120\SGARES.dwg | Last Modified: May 08, 2018 - 5:40pm Plotted on: May 29, 2018 - 1:21pm By sgarvente

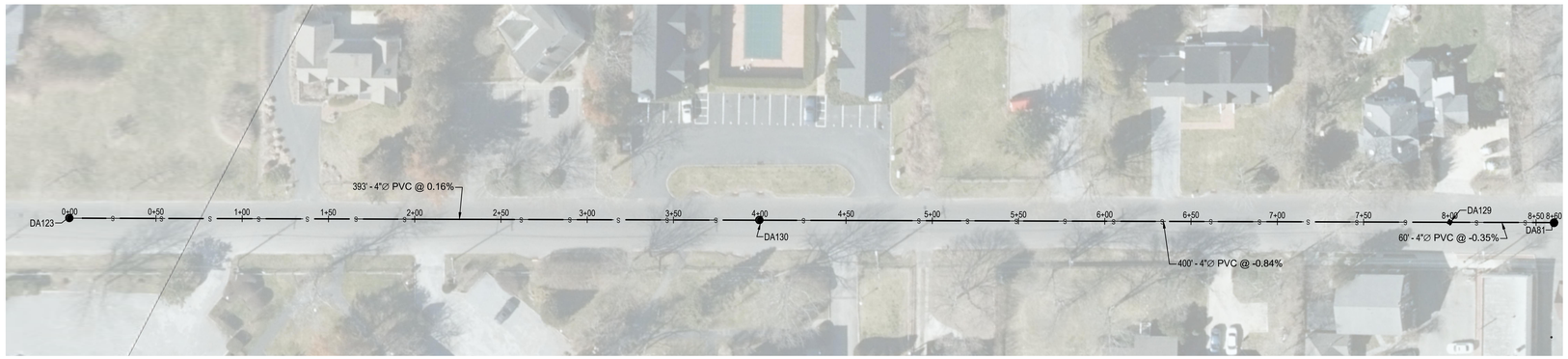


**West LPS Plan**

SCALE: 1"= 40'-0"

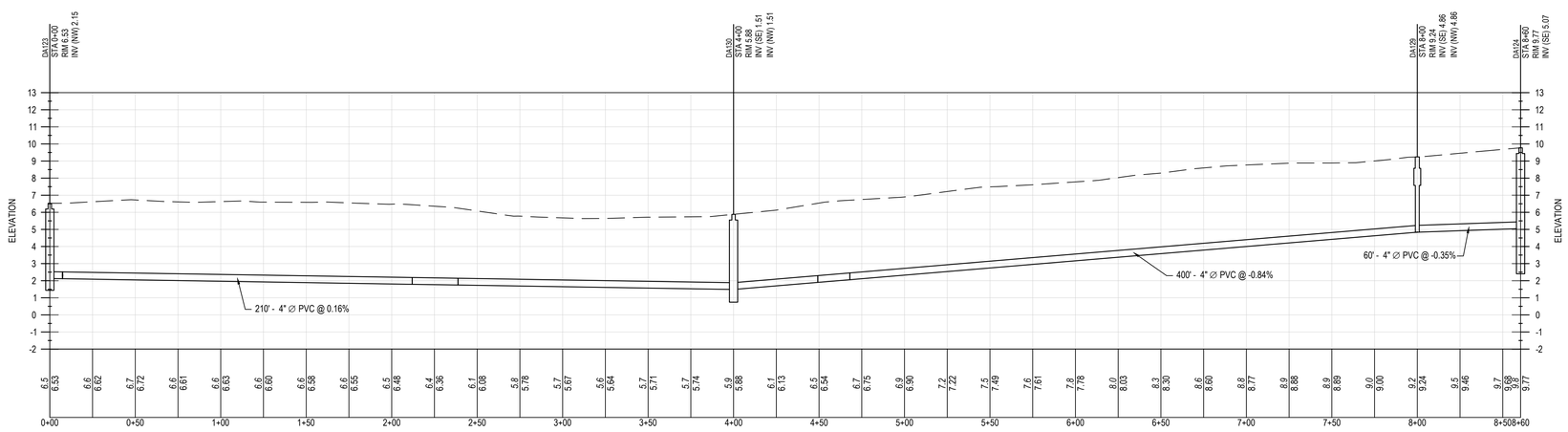


**PROFILE VIEW OF Main Street West LPS**
**VERTICAL SCALE: 1" = 2**
**HORIZONTAL SCALE: 1" = 20**


H2M

538 Broad Hollow Road, 4th Floor East
Melville, NY 11747
631.756.8000 • www.h2m.com


CONSULTANTS:

| MARK | DATE | DESCRIPTION |
|---|---|---|
| | | |

"ALTERATION OF THIS DOCUMENT EXCEPT BY A LICENSED PROFESSIONAL IS ILLEGAL"

| DESIGNED BY: | DRAWN BY: | CHECKED BY: | REVIEWED BY: |
|---|---|---|---|
| | | | |

| PROJECT No.: | DATE: | SCALE: |
|---|---|---|
| WHBV 18-01 | MAY 2018 | AS SHOWN |

CLIENT

**Village of Westhampton Beach**

**Collection System Preliminary Design**

**Suffolk County, NY**

CONTRACT

**ALL CONTRACTS**

STATUS

**NOT FOR CONSTRUCTION**

SHEET TITLE

**WEST LPS PLAN&PROFILE**

DRAWING No.

SHEET No.

OF

C:\Users\governale\appdata\local\temp\AcPublish_15120\FIGURES.dwg Last Modified: May 08, 2018 - 5:46pm Plotted on: May 29, 2018 - 1:22pm By:kgovernale

# APPENDIX F

Engineer's Construction Cost Opinion Back-up

Prepared by: NFB
Date: July 2018

Inc. Village of Westhampton Beach
Phase 1 Sewer System (Alt. No. 1)
Force Main Take-off

**Force Mains**

| ITEM NO. | ITEM DESCRIPTION | UNITS | QTY NORTH | QTY SOUTH | Unit Price (Eng. Est.) | Construction Cost Opinion NORTH | Construction Cost Opinion SOUTH | Construction Cost Opinion TOTAL |
|---|---|---|---|---|---|---|---|---|
| 1 | Paint Castings | EA | 41 | 4 | $ 50 | $ 2,067 | $ 200 | $ 2,267 |
| 2 | PVC DR-18 Force Main | LF | 40 | 1,200 | $ 130 | $ 5,200 | $ 156,000 | $ 161,200 |
| 3 | PVC DR-18 Force Main (parallel) | LF | 12,360 | 0 | $ 165 | $ 2,039,400 | $ - | $ 2,039,400 |
| 4 | Cleanouts | EA | 41 | 4 | $ 3,500 | $ 144,667 | $ 14,000 | $ 158,667 |
| 5 | Pipe Jacking Sending Pit | EA | 1 | 0 | $ 25,000 | $ 25,000 | $ - | $ 25,000 |
| 6 | Pipe Jacking Receiving Pit | EA | 1 | 0 | $ 15,000 | $ 15,000 | $ - | $ 15,000 |
| 7 | 30" Diameter Steel Pipe Jacking Sleeve | LF | 100 | 0 | $ 600 | $ 60,000 | $ - | $ 60,000 |
| 8 | Test Pits | EA | 83 | 8 | $ 750 | $ 62,000 | $ 6,000 | $ 68,000 |
| 9 | Marking Tape | LF | 12,400 | 1,200 | $ 1 | $ 12,400 | $ 1,200 | $ 13,600 |
| 10 | Erosion Control | LS | $ 91,176 | $ 8,824 | $ 100,000 | $ 91,176 | $ 8,824 | $ 100,000 |
| 11 | Traffic Signal Detection Loops | EA | 10 | 0 | $ 1,000 | $ 10,000 | $ - | $ 10,000 |
| 12 | Sawcutting | LF | 24,616 | 2,416 | $ 6 | $ 147,696 | $ 14,496 | $ 162,192 |
| 13 | Remove and Dispose of Asphalt Pavement and Base | SY | 8,267 | 800 | $ 5 | $ 41,333 | $ 4,000 | $ 45,333 |
| 14 | 4-Inch Asphalt Aggregate Dense Pavement Base Course - County Roads (NYSDOT Type 1) | CY | 1,225 | 119 | $ 70 | $ 85,728 | $ 8,296 | $ 94,025 |
| 15 | 1-1/2 Inch Bituminous Concrete Binder Course - County Roads (NYSDOT Type 3) | TON | 930 | 90 | $ 110 | $ 102,300 | $ 9,900 | $ 112,200 |
| 16 | 1-1/4 Inch Bituminous Concrete Pavement Top Course - County Roads (NYSDOT Type 6F) | TON | 775 | 75 | $ 110 | $ 85,250 | $ 8,250 | $ 93,500 |
| 17 | Temporary Bituminous Pavement | TON | 1,240 | 120 | $ 110 | $ 136,400 | $ 13,200 | $ 149,600 |
| 18 | Portland Cement Concrete Pavement | SY | 0 | 0 | $ 150 | $ - | $ - | $ - |
| 19 | Portland Cement Concrete Curb | LF | 100 | | $ 10 | $ 1,000 | $ - | $ 1,000 |
| 20 | Portland Cement Concrete Sidewalk | SY | 44 | | $ 85 | $ 3,778 | $ - | $ 3,778 |
| 21 | Portland Cement Concrete Driveway Apron | EA | 4 | | $ 2,000 | $ 8,000 | $ - | $ 8,000 |
| 22 | Portland Cement Handicapped Ramp | EA | 4 | | $ 500 | $ 2,000 | $ - | $ 2,000 |
| 23 | Pavement Striping | LF | 49,600 | 2,400 | $ 1 | $ 49,600 | $ 2,400 | $ 52,000 |
| 24 | Crosswalk Striping | LF | 3,000 | 1,000 | $ 20 | $ 60,000 | $ 20,000 | $ 80,000 |
| 25 | Stop Line Striping | LF | 300 | 100 | $ 20 | $ 6,000 | $ 2,000 | $ 8,000 |
| 26 | Painted Arrows | EA | 16 | 0 | $ 500 | $ 8,000 | $ - | $ 8,000 |
| 27 | Painted Handicapped Parking Zones & Symbols | EA | 0 | 0 | $ 500 | $ - | $ - | $ - |
| 28 | Laboratory Testing Cash Allowance | LS | $ 30,000 | $ 10,000 | $ 40,000 | $ 30,000 | $ 10,000 | $ 40,000 |
| 29 | Utility Relocation Allowance | LS | $ 65,000 | $ 15,000 | $ 80,000 | $ 65,000 | $ 15,000 | $ 80,000 |

| | | | |
|---|---|---|---|
| **SUBTOTAL:** | **$ 3,298,995** | **$ 293,766** | **$ 3,592,761** |
| **CONSTRUCTION CONTINGENCY (10%)** | **$ 329,900** | **$ 29,377** | **$ 359,276** |
| **Mobilization – 4.0 % of the subtotal** | $ 145,200 | $ 13,000 | $ 158,100 |
| **Bonds – 1.5 % of the subtotal** | $ 54,500 | $ 4,900 | $ 59,300 |
| **Insurance – 1.0 % of the subtotal** | $ 36,300 | $ 3,300 | $ 39,600 |
| **Miscellaneous Requirements – 2.0 % of the subtotal** | $ 72,600 | $ 6,500 | $ 79,100 |
| **TOTAL** | **$ 3,937,495** | **$ 350,842** | **$ 4,288,137** |
| **SAY** | **$ 3,938,000** | **$ 351,000** | **$ 4,289,000** |

Prepared by: NFB
Date: July 2018

Inc. Village of Westhampton Beach
Phase 1 Sewer System (Alt. No. 1)
Pump Station Take-off

**Pump Station #1 - North of Main Street**

| | Scope of Work | Quantity | Unit | Unit ($) | Total Unit Cost Material | Total Cost Labor | Cost | |
|---|---|---|---|---|---|---|---|---|
| Item # | Item Description | | | | | | | |
| 1 | **MECHANICAL AND PLUMBING** | | | | | | **$123,821.59** | |
| | FURNISH AND INSTALL INFLUENT SUBMERSIBLE PUMPS W/ BASE ELBOW & GUIDE RAILS - INCLUDES PANEL | 2 | EA | $26,700.00 | $ 53,400.00 | $ 11,729.03 | $65,129.03 | |
| | | | | | | | $0.00 | |
| | 4" DIA. CLASS 53, AWWA C151, 90 DEG. ELBOW (FLANGED) | 4 | EA | $137.00 | $ 548.00 | $ 296.15 | $844.15 | |
| | 4" DIA. WEIGHTED AND LEVER SWING CHECK VALVE (FLANGED) | 2 | EA | $1,416.00 | $ 2,832.00 | $ 148.07 | $2,980.07 | |
| | 4" DIA. ECC. PLUG VALVE (FLANGED) | 3 | EA | $727.00 | $ 2,181.00 | $ 560.20 | $2,741.20 | |
| | 4" DIA. CLASS 53, AWWA C151, TEE (FLANGED) | 1 | EA | $250.00 | $ 250.00 | $ 93.37 | $343.37 | |
| | 4" DIA. WYE FITTING (FLANGED) | 1 | EA | $231.00 | $ 231.00 | $ 93.37 | $324.37 | |
| | 4" DIA. FLANGE ADAPTER STYLE DJ400 (DISMANTLING JOINT) | 1 | EA | $704.61 | $ 704.61 | $ 186.73 | $891.34 | |
| | 4" DIA. LINK SEAL | 7 | EA | $125.00 | $ 875.00 | $ 518.26 | $1,393.26 | |
| | 4" DIA. (DUCTILE IRON) | 38.5 | LF | $50.00 | $ 1,925.00 | $ 1,113.46 | $3,038.46 | |
| | 4" DIA. RESTRAINED JOINT PIPE COUPLING | 2 | EA | $704.61 | $ 1,409.22 | $ 373.47 | $1,782.69 | |
| | 4" DIA. MAGNETIC TYPE FLOW METER | 1 | EA | $5,000.00 | $ 5,000.00 | $ 910.27 | $5,910.27 | |
| | PRESSURE GAUGE | 1 | EA | $50.00 | $ 50.00 | $ 27.35 | $77.35 | |
| | 4" FLANGED X FEMALE COUPLER, STAINLESS STEEL | 1 | EA | $930.50 | $ 930.50 | $ 74.04 | $1,004.54 | |
| | | | | | | | $0.00 | |
| | WET WELL EXHAUST FAN | 1 | EA | $2,500.00 | $ 2,500.00 | $ 429.60 | $2,929.60 | |
| | | | | | | | $0.00 | |
| | INFLUENT MIXING SYSTEM (PHI PULSED AIR MIXING) | 1 | EA | $25,000.00 | $ 25,000.00 | $ 5,602.02 | $30,602.02 | |
| | 1" DIA. SCH40 PVC PIPE | 40 | LF | $3.71 | $ 148.40 | $ 186.73 | $335.13 | |
| | 1" DIA. SCH40 PVC TEE | 3 | EA | $19.13 | $ 57.39 | $ 140.05 | $197.44 | |
| | 1" DIA. SCH 40 PVC 90 DEG. ELBOW | 6 | EA | $7.30 | $ 43.80 | $ 444.22 | $488.02 | |
| | | | | | | | | |
| | MUFFIN MONSTER IN-WELL GRINDER (30005-0008-GI) - INCLUDES CONTROLLER | 0 | EA | $32,051.00 | | | $0.00 | *optional item |
| | | | | | | | | |
| | Portable Jib Crane at Wet Well | 1 | EA | $2,500.00 | $ 2,500.00 | $ 309.29 | $2,809.29 | |
| | | | | | | | | |
| 2 | **STRUCTURES** | | | | | | **$133,161.42** | |
| | *PUMP STATION - WET WELL* | | | | | | | |
| | PUMP STATION EXCAVATION - SOIL | 96 | CY | $14.24 | $ 1,367.04 | | $1,367 | |
| | PUMP STATION WOOD SHORING | 864 | SF | $7.41 | $ 6,402.24 | | $6,402 | |
| | PUMP STATION 8 FTDIA - PRECAST | 16 | LF | $500.00 | $ 13,625.00 | $ 35,519.76 | $49,145 | |
| | PUMP STATION 8 ft DIA. - TOP SLAB | 1 | EA | $1,200.00 | $ 1,200.00 | $ 273.23 | $1,473 | |
| | BACKFILL | 63 | CY | $20.97 | $ 1,310.76 | | $1,311 | |
| | DISPOSE SPOILS/TIPPING FEE | 54.3 | TN | $100.69 | $ 5,463.36 | | $5,463 | |
| | | | | | | | $0 | |
| | *PUMP STATION VALVE VAULT* | | | | | | $0 | |
| | VALVE VAULT EXCAVATION - SOIL | 12 | CY | $14.24 | $ 177.21 | | $177 | |
| | VALVE VAULT WOOD SHORING | 196 | SF | $7.41 | $ 1,452.36 | | $1,452 | |
| | PUMP STATION 4FT X 6FT - PRECAST | 1 | EA | $3,500.00 | $ 3,500.00 | $ 1,092.92 | $4,593 | |
| | PUMP STATION 4FT X 6 FT - TOP SLAB | 1 | EA | $1,200.00 | $ 1,200.00 | $ 409.84 | $1,610 | |
| | BACKFILL | 3 | CY | $20.97 | $ 70.68 | | $71 | |
| | DISPOSE SPOILS/TIPPING FEE | 14.7 | TN | $100.69 | $ 1,480.14 | | $1,480 | |
| | | | | | | | | |
| | *PUMP STATION FLOW METER PIT* | | | | | | $0 | |
| | VALVE VAULT EXCAVATION - SOIL | 9 | CY | $14.24 | $ 132.91 | | $133 | |
| | VALVE VAULT WOOD SHORING | 168 | SF | $7.41 | $ 1,244.88 | | $1,245 | |
| | PUMP STATION 4FT X 4FT - PRECAST | 1 | EA | $3,250.00 | $ 3,250.00 | $ 1,092.92 | $4,343 | |
| | PUMP STATION 4FT X 4 FT - TOP SLAB | 1 | EA | $1,000.00 | $ 1,000.00 | $ 409.84 | $1,410 | |
| | BACKFILL | 3 | CY | $20.97 | $ 59.80 | | $60 | |
| | DISPOSE SPOILS/TIPPING FEE | 10.5 | TN | $100.69 | $ 1,057.25 | | $1,057 | |
| | | | | | | | $0 | |
| | *PUMP STATION BUILDING FOUNDATION* | | | | | | $0 | |
| | *PRECAST BUILDING (12' X 18')* | *1* | *EA* | $20,000.00 | $ 25,500.00 | $ 8,014.86 | $33,515 | |
| | BUILDING FOUNDATION EXCAVATION - SOIL | 40 | CY | $14.24 | $ 569.60 | | $570 | |
| | BLDG (FOOTING) - CONCRETE | 4.4 | CY | $217.36 | $ 966.04 | | $966 | |
| | BLDG (FOUNDATION WALLS) - CONCRETE | 5.2 | CY | $217.36 | $ 1,132.69 | | $1,133 | |
| | CONCRETE WASTE 5% | 0.5 | CY | $113.00 | $ 54.55 | | $55 | |
| | CONCRETE FORMWORK | 540.0 | SF | $12.91 | $ 6,971.40 | | $6,971 | |
| | #5 REBAR | 0.5 | TON | $1,752.66 | $ 795.19 | | $795 | |
| | BACKFILL | 1 | CY | $20.97 | $ 23.57 | | $24 | |
| | DISPOSE SPOILS/TIPPING FEE | 63.0 | TN | $100.69 | $ 6,341.39 | | $6,341 | |
| | | | | | | | | |
| 3 | **SITE WORK** | | | | | | **$51,678.62** | |
| | PRECAST MANHOLE STRUCTURE | 1.0 | EA | $6,000.00 | $ 6,000.00 | | $6,000 | |
| | MANHOLE CASTING | 1.0 | EA | $657.50 | $ 657.50 | | $658 | |
| | TRENCH EXCAVATION W/ TRENCH BOX | 37.0 | CY | $14.24 | $ 527.41 | | $527 | |
| | BACKFILL | 18.4 | CY | $20.97 | $ 386.27 | | $386 | |
| | COMPACTED BASE | 3.7 | CY | $59.83 | $ 221.59 | | $222 | |
| | DISPOSE SPOILS/TIPPING FEE | 10.1 | TN | $100.69 | $ 1,012.25 | | $1,012 | |
| | CONCRETE 3000 PSI (Pour From Chute) | 3.7 | CY | $217.36 | $ 809.31 | | $809 | |
| | CONCRETE WASTE 5% | 0.2 | CY | $113.00 | $ 21.04 | | $21 | |
| | | | | | | | | |
| | 8" DIA. PUMP STATION INFLUENT PIPING | 146 | LF | $18.03 | $ 2,632.38 | | $2,632 | |
| | TRENCH EXCAVATION W/ TRENCH BOX | 324.4 | CY | $14.24 | $ 4,620.09 | | $4,620 | |
| | BACKFILL | 289.1 | CY | $20.97 | $ 6,061.39 | | $6,061 | |
| | COMPACTED BASE | 32.4 | CY | $59.83 | $ 1,941.15 | | $1,941 | |
| | DISPOSE SPOILS/TIPPING FEE | 19.1 | TN | $100.69 | $ 1,924.45 | | $1,924 | |
| | | | | | | | | |
| | GRADING AND PAVING | | | | | | | |
| | SITE GRADING FOR PAVEMENT | 108.9 | SY | $1.93 | $ 210.16 | | $210 | |
| | BINDER COURSE WITH STONE BASE | 980.0 | SF | $4.43 | $ 4,341.40 | | $4,341 | |
| | TOP COURSE | 108.9 | SY | $11.67 | $ 1,270.73 | | $1,271 | |
| | | | | | | | $0 | |
| | SIDEWALKS & LANDINGS | 16.0 | SF | $6.50 | $ 104.00 | | $104 | |
| | CURBS | 0.0 | LF | $14.75 | | | $0 | |
| | | | | | | | | |
| | TOPSOIL | 0.0 | SY | $5.02 | | | $0 | |

Prepared by: NFB
Date: July 2018

Inc. Village of Westhampton Beach
Phase 1 Sewer System (Alt. No. 1)
Pump Station Take-off

| | | | | | | | | |
|---|---|---|---|---|---|---|---|---|
| | SEEDING | 0.0 | SY | $0.64 | | | $0 | |
| | | | | | | | $0 | |
| | 6" DIA. BOLLARDS | 6.0 | EA | $750.00 | $ 4,500.00 | | $4,500 | |
| | | | | | | | $0 | |
| | FIELD INLET PROTECTION | 4.0 | EA | $150.00 | $ 600.00 | | $600 | |
| | SILT FENCE | 300.0 | LF | $2.75 | $ 825.00 | | $825 | |
| | SILT FENCE MAINTENANCE | 2.0 | PER 6 MO. | $206.25 | $ 412.50 | | $413 | |
| | | | | | | | $0 | |
| | FENCE | 126.0 | LF | $100.00 | $ 12,600.00 | | $12,600 | |
| 4 | **ELECTRICAL** | | | | | | **$143,050.84** | |
| | NEW ELECTRIC SERVICE PROVIDED BY PSE&G | | | | | | | |
| | WIRE - UTILITY POLE TO TRANSFORMER (4-500 KCMIL) | 100 | LF | $223.75 | $ 22,374.50 | | $22,375 | |
| | TERMINAL LUGS | 8 | EA | $90.11 | $ 720.88 | | $721 | |
| | CONDUIT - UTILITY POLE TO CONTROL BUILDING (4" PVC) | 100 | LF | $10.79 | $ 1,079.00 | | $1,079 | |
| | | | | | | | $0 | |
| | SITE LIGHTING | 2 | EA | $3,600.00 | $ 7,200.00 | | $7,200 | |
| | | | | | | | $0 | |
| | INFLUENT PUMP CONTROL PANEL & COMPLETE WIRE TERMINATIONS | 1 | MH | $54.45 | | $ 13,066.99 | $13,067 | |
| | | | | | | | $0 | |
| | LEVEL TRANSDUCER | 1 | EA | $1,500.00 | $ 1,500.00 | | $1,500 | |
| | FLOATS | 3 | EA | $100.00 | $ 300.00 | | $300 | |
| | DIGITAL CHART RECORDER | 1 | EA | $2,500.00 | $ 2,500.00 | | $2,500 | |
| | AUTO DIALER | 1 | EA | $500.00 | $ 500.00 | | $500 | |
| | BREAKER PANEL | 1 | EA | $3,500.00 | $ 3,500.00 | | $3,500 | |
| | ELECTRICAL EQUIPMENT | 1 | EA | $500.00 | $ 500.00 | | $500 | |
| | TRANSFER SWITCH | 1 | EA | $9,500.00 | $ 9,500.00 | | $9,500 | |
| | 40KW BACK UP GENERATOR WITH SOUND PROOF ENCLOSURE | 1 | EA | $50,000.00 | $ 50,000.00 | | $50,000 | |
| | | | | | | | $0 | |
| | #10 WIRE | 400 | LF | $9.24 | $ 3,696.00 | | $3,696 | |
| | #12 WIRE | 800 | LF | $8.98 | $ 7,184.00 | | $7,184 | |
| | 1/0 WIRE | 200 | LF | $15.25 | $ 3,050.00 | | $3,050 | |
| | PERFORM CABLE AND SPLICE TESTING | 20 | SPLICE | $113.04 | $ 2,260.80 | | $2,261 | |
| | SWITCHES | 16 | EA | $123.04 | $ 1,968.64 | | $1,969 | |
| | RECEPTACLES GFCI | 10 | EA | $153.04 | $ 1,530.40 | | $1,530 | |
| | CABLE TERMINATIONS | 56 | EA | $113.04 | $ 6,330.24 | | $6,330 | |
| | TESTING | 1 | MH | $54.45 | | $ 871.13 | $871 | |
| | | | | | | | $0 | |
| | INTERIOR LED LIGHTING FIXTURES (HIGH BAY SURFACE MOUNTED ROUND, 150 WATTS) | 2 | EA | $1,036.64 | $ 2,073.28 | $ 108.89 | $2,182 | |
| | EXTERIOR LED LIGHTING FIXTURES (110 WATT) | 1 | EA | $965.01 | $ 965.01 | $ 54.45 | $1,019 | |
| | EXIT SIGNS | 1 | EA | $162.18 | $ 162.18 | $ 54.45 | $217 | |
| | | | | | | **SUBTOTAL CONSTRUCTION COST . . .** | **$451,712.47** | |
| | | | | | | BOND AND INSURANCE *3%* | *$13,551.37* | CHECK! |
| | | | | | | **SUBTOTAL . . .** | **$465,263.85** | |
| | | | | | | OVERHEAD *10%* | *$46,526* | |
| | | | | | | **SUBTOTAL . . .** | **$511,790.23** | CHECK! |
| | | | | | | PROFIT *10%* | *$51,179.02* | |
| | | | | | | **SUBTOTAL . . .** | **$562,969.25** | CHECK! |
| | | | | | | CONTINGENCY *10%* | *$56,297* | |
| | | | | | | **TOTAL CONSTRUCTION COST . . .** | **$619,266.18** | CHECK! |
| | | | | | | | $620,000.00 | |

**Pump Station #2 - South of Main Street**

| | Scope of Work | Quantity | Unit | Unit ($) | Total Unit Cost Material | Total Cost Labor | Cost | |
|---|---|---|---|---|---|---|---|---|
| Item # | Item Description | | | | | | | |
| 1 | **MECHANICAL AND PLUMBING** | | | | | | **$106,421.59** | |
| | FURNISH AND INSTALL INFLUENT SUBMERSIBLE PUMPS W/ BASE ELBOW & GUIDE RAILS - INCLUDES PANEL | 2 | EA | $18,000.00 | $ 36,000.00 | $ 11,729.03 | $47,729.03 | |
| | | | | | | | $0.00 | |
| | 4" DIA. CLASS 53, AWWA C151, 90 DEG. ELBOW (FLANGED) | 4 | EA | $137.00 | $ 548.00 | $ 296.15 | $844.15 | |
| | 4" DIA. WEIGHTED AND LEVER SWING CHECK VALVE (FLANGED) | 2 | EA | $1,416.00 | $ 2,832.00 | $ 148.07 | $2,980.07 | |
| | 4" DIA. ECC. PLUG VALVE (FLANGED) | 3 | EA | $727.00 | $ 2,181.00 | $ 560.20 | $2,741.20 | |
| | 4" DIA. CLASS 53, AWWA C151, TEE (FLANGED) | 1 | EA | $250.00 | $ 250.00 | $ 93.37 | $343.37 | |
| | 4" DIA. WYE FITTING (FLANGED) | 1 | EA | $231.00 | $ 231.00 | $ 93.37 | $324.37 | |
| | 4" DIA. FLANGE ADAPTER STYLE DJ400 (DISMANTLING JOINT) | 1 | EA | $704.61 | $ 704.61 | $ 186.73 | $891.34 | |
| | 4" DIA. LINK SEAL | 7 | EA | $125.00 | $ 875.00 | $ 518.26 | $1,393.26 | |
| | 4" DIA. (DUCTILE IRON) | 38.5 | LF | $50.00 | $ 1,925.00 | $ 1,113.46 | $3,038.46 | |
| | 4" DIA. RESTRAINED JOINT PIPE COUPLING | 2 | EA | $704.61 | $ 1,409.22 | $ 373.47 | $1,782.69 | |
| | 4" DIA. MAGNETIC TYPE FLOW METER | 1 | EA | $5,000.00 | $ 5,000.00 | $ 910.27 | $5,910.27 | |
| | PRESSURE GAUGE | 1 | EA | $50.00 | $ 50.00 | $ 27.35 | $77.35 | |
| | 4" FLANGED X FEMALE COUPLER, STAINLESS STEEL | 1 | EA | $930.50 | $ 930.50 | $ 74.04 | $1,004.54 | |
| | | | | | | | $0.00 | |
| | WET WELL EXHAUST FAN | 1 | EA | $2,500.00 | $ 2,500.00 | $ 429.60 | $2,929.60 | |
| | | | | | | | $0.00 | |
| | INFLUENT MIXING SYSTEM (PHI PULSED AIR MIXING) | 1 | EA | $25,000.00 | $ 25,000.00 | $ 5,602.02 | $30,602.02 | |
| | 1" DIA. SCH40 PVC PIPE | 40 | LF | $3.71 | $ 148.40 | $ 186.73 | $335.13 | |
| | 1" DIA. SCH40 PVC TEE | 3 | EA | $19.13 | $ 57.39 | $ 140.05 | $197.44 | |
| | 1" DIA. SCH 40 PVC 90 DEG. ELBOW | 6 | EA | $7.30 | $ 43.80 | $ 444.22 | $488.02 | |
| | | | | | | | | |
| | MUFFIN MONSTER IN-WELL GRINDER (30005-0008-GI) - INCLUDES CONTROLLER | 0 | EA | $32,051.00 | | | $0.00 | *optional item |
| | | | | | | | | |
| | Portable Jib Crane at Wet Well | 1 | EA | $2,500.00 | $ 2,500.00 | $ 309.29 | $2,809.29 | |
| | | | | | | | | |
| 2 | **STRUCTURES** | | | | | | **$133,161.42** | |
| | *PUMP STATION - WET WELL* | | | | | | | |
| | PUMP STATION EXCAVATION - SOIL | 96 | CY | $14.24 | $ 1,367.04 | | $1,367 | |
| | PUMP STATION WOOD SHORING | 864 | SF | $7.41 | $ 6,402.24 | | $6,402 | |
| | PUMP STATION 8 FTDIA - PRECAST | 16 | LF | $500.00 | $ 13,625.00 | $ 35,519.76 | $49,145 | |
| | PUMP STATION 8 ft DIA. - TOP SLAB | 1 | EA | $1,200.00 | $ 1,200.00 | $ 273.23 | $1,473 | |
| | BACKFILL | 63 | CY | $20.97 | $ 1,310.76 | | $1,311 | |

Prepared by: NFB
Date: July 2018

Inc. Village of Westhampton Beach
Phase 1 Sewer System (Alt. No. 1)
Pump Station Take-off

| | | | | | | | |
|---|---|---|---|---|---|---|---|
| | DISPOSE SPOILS/TIPPING FEE | 54.3 | TN | $100.69 | $ 5,463.36 | | $5,463 |
| | | | | | | | $0 |
| | *PUMP STATION VALVE VAULT* | | | | | | $0 |
| | VALVE VAULT EXCAVATION - SOIL | 12 | CY | $14.24 | $ 177.21 | | $177 |
| | VALVE VAULT WOOD SHORING | 196 | SF | $7.41 | $ 1,452.36 | | $1,452 |
| | PUMP STATION 4FT X 6FT - PRECAST | 1 | EA | $3,500.00 | $ 3,500.00 | $ 1,092.92 | $4,593 |
| | PUMP STATION 4FT X 6 FT - TOP SLAB | 1 | EA | $1,200.00 | $ 1,200.00 | $ 409.84 | $1,610 |
| | BACKFILL | 3 | CY | $20.97 | $ 70.68 | | $71 |
| | DISPOSE SPOILS/TIPPING FEE | 14.7 | TN | $100.69 | $ 1,480.14 | | $1,480 |
| | | | | | | | |
| | *PUMP STATION FLOW METER PIT* | | | | | | $0 |
| | VALVE VAULT EXCAVATION - SOIL | 9 | CY | $14.24 | $ 132.91 | | $133 |
| | VALVE VAULT WOOD SHORING | 168 | SF | $7.41 | $ 1,244.88 | | $1,245 |
| | PUMP STATION 4FT X 4FT - PRECAST | 1 | EA | $3,250.00 | $ 3,250.00 | $ 1,092.92 | $4,343 |
| | PUMP STATION 4FT X 4 FT - TOP SLAB | 1 | EA | $1,000.00 | $ 1,000.00 | $ 409.84 | $1,410 |
| | BACKFILL | 3 | CY | $20.97 | $ 59.80 | | $60 |
| | DISPOSE SPOILS/TIPPING FEE | 10.5 | TN | $100.69 | $ 1,057.25 | | $1,057 |
| | | | | | | | $0 |
| | *PUMP STATION BUILDING FOUNDATION* | | | | | | $0 |
| | *PRECAST BUILDING (12' X 18')* | *1* | *EA* | $20,000.00 | $ 25,500.00 | $ 8,014.86 | $33,515 |
| | BUILDING FOUNDATION EXCAVATION - SOIL | 40 | CY | $14.24 | $ 569.60 | | $570 |
| | BLDG (FOOTING) - CONCRETE | 4.4 | CY | $217.36 | $ 966.04 | | $966 |
| | BLDG (FOUNDATION WALLS) - CONCRETE | 5.2 | CY | $217.36 | $ 1,132.69 | | $1,133 |
| | CONCRETE WASTE 5% | 0.5 | CY | $113.00 | $ 54.55 | | $55 |
| | CONCRETE FORMWORK | 540.0 | SF | $12.91 | $ 6,971.40 | | $6,971 |
| | #5 REBAR | 0.5 | TON | $1,752.66 | $ 795.19 | | $795 |
| | BACKFILL | 1 | CY | $20.97 | $ 23.57 | | $24 |
| | DISPOSE SPOILS/TIPPING FEE | 63.0 | TN | $100.69 | $ 6,341.39 | | $6,341 |
| | | | | | | | |
| **3** | **SITE WORK** | | | | | | **$51,678.62** |
| | PRECAST MANHOLE STRUCTURE | 1.0 | EA | $6,000.00 | $ 6,000.00 | | $6,000 |
| | MANHOLE CASTING | 1.0 | EA | $657.50 | $ 657.50 | | $658 |
| | TRENCH EXCAVATION W/ TRENCH BOX | 37.0 | CY | $14.24 | $ 527.41 | | $527 |
| | BACKFILL | 18.4 | CY | $20.97 | $ 386.27 | | $386 |
| | COMPACTED BASE | 3.7 | CY | $59.83 | $ 221.59 | | $222 |
| | DISPOSE SPOILS/TIPPING FEE | 10.1 | TN | $100.69 | $ 1,012.25 | | $1,012 |
| | CONCRETE 3000 PSI (Pour From Chute) | 3.7 | CY | $217.36 | $ 809.31 | | $809 |
| | CONCRETE WASTE 5% | 0.2 | CY | $113.00 | $ 21.04 | | $21 |
| | | | | | | | |
| | 8" DIA. PUMP STATION INFLUENT PIPING | 146 | LF | $18.03 | $ 2,632.38 | | $2,632 |
| | TRENCH EXCAVATION W/ TRENCH BOX | 324.4 | CY | $14.24 | $ 4,620.09 | | $4,620 |
| | BACKFILL | 289.1 | CY | $20.97 | $ 6,061.39 | | $6,061 |
| | COMPACTED BASE | 32.4 | CY | $59.83 | $ 1,941.15 | | $1,941 |
| | DISPOSE SPOILS/TIPPING FEE | 19.1 | TN | $100.69 | $ 1,924.45 | | $1,924 |
| | | | | | | | |
| | GRADING AND PAVING | | | | | | |
| | SITE GRADING FOR PAVEMENT | 108.9 | SY | $1.93 | $ 210.16 | | $210 |
| | BINDER COURSE WITH STONE BASE | 980.0 | SF | $4.43 | $ 4,341.40 | | $4,341 |
| | TOP COURSE | 108.9 | SY | $11.67 | $ 1,270.73 | | $1,271 |
| | | | | | | | $0 |
| | SIDEWALKS & LANDINGS | 16.0 | SF | $6.50 | $ 104.00 | | $104 |
| | CURBS | 0.0 | LF | $14.75 | | | $0 |
| | | | | | | | |
| | TOPSOIL | 0.0 | SY | $5.02 | | | $0 |
| | SEEDING | 0.0 | SY | $0.64 | | | $0 |
| | | | | | | | $0 |
| | 6" DIA. BOLLARDS | 6.0 | EA | $750.00 | $ 4,500.00 | | $4,500 |
| | | | | | | | $0 |
| | FIELD INLET PROTECTION | 4.0 | EA | $150.00 | $ 600.00 | | $600 |
| | SILT FENCE | 300.0 | LF | $2.75 | $ 825.00 | | $825 |
| | SILT FENCE MAINTENANCE | 2.0 | PER 6 MO. | $206.25 | $ 412.50 | | $413 |
| | | | | | | | $0 |
| | FENCE | 126.0 | LF | $100.00 | $ 12,600.00 | | $12,600 |
| | | | | | | | |
| **4** | **ELECTRICAL** | | | | | | **$131,324.09** |
| | NEW ELECTRIC SERVICE PROVIDED BY PSE&G | | | | | | |
| | WIRE - UTILITY POLE TO TRANSFORMER (4-500 KCMIL) | 50 | LF | $223.75 | $ 11,187.25 | | $11,187 |
| | TERMINAL LUGS | 8 | EA | $90.11 | $ 720.88 | | $721 |
| | CONDUIT - UTILITY POLE TO CONTROL BUILDING (4" PVC) | 50 | LF | $10.79 | $ 539.50 | | $540 |
| | | | | | | | $0 |
| | SITE LIGHTING | 2 | EA | $3,600.00 | $ 7,200.00 | | $7,200 |
| | | | | | | | $0 |
| | INFLUENT PUMP CONTROL PANEL & COMPLETE WIRE TERMINATIONS | 1 | MH | $54.45 | | $ 13,066.99 | $13,067 |
| | | | | | | | $0 |
| | LEVEL TRANSDUCER | 1 | EA | $1,500.00 | $ 1,500.00 | | $1,500 |
| | FLOATS | 3 | EA | $100.00 | $ 300.00 | | $300 |
| | DIGITAL CHART RECORDER | 1 | EA | $2,500.00 | $ 2,500.00 | | $2,500 |
| | AUTO DIALER | 1 | EA | $500.00 | $ 500.00 | | $500 |
| | BREAKER PANEL | 1 | EA | $3,500.00 | $ 3,500.00 | | $3,500 |
| | ELECTRICAL EQUIPMENT | 1 | EA | $500.00 | $ 500.00 | | $500 |
| | TRANSFER SWITCH | 1 | EA | $9,500.00 | $ 9,500.00 | | $9,500 |
| | 40KW BACK UP GENERATOR WITH SOUND PROOF ENCLOSURE | 1 | EA | $50,000.00 | $ 50,000.00 | | $50,000 |
| | | | | | | | $0 |
| | #10 WIRE | 400 | LF | $9.24 | $ 3,696.00 | | $3,696 |
| | #12 WIRE | 800 | LF | $8.98 | $ 7,184.00 | | $7,184 |
| | 1/0 WIRE | 200 | LF | $15.25 | $ 3,050.00 | | $3,050 |
| | PERFORM CABLE AND SPLICE TESTING | 20 | SPLICE | $113.04 | $ 2,260.80 | | $2,261 |
| | SWITCHES | 16 | EA | $123.04 | $ 1,968.64 | | $1,969 |
| | RECEPTACLES GFCI | 10 | EA | $153.04 | $ 1,530.40 | | $1,530 |
| | CABLE TERMINATIONS | 56 | EA | $113.04 | $ 6,330.24 | | $6,330 |
| | TESTING | 1 | MH | $54.45 | | $ 871.13 | $871 |
| | | | | | | | $0 |
| | INTERIOR LED LIGHTING FIXTURES (HIGH BAY SURFACE MOUNTED ROUND, 150 WATTS) | 2 | EA | $1,036.64 | $ 2,073.28 | $ 108.89 | $2,182 |
| | EXTERIOR LED LIGHTING FIXTURES (110 WATT) | 1 | EA | $965.01 | $ 965.01 | $ 54.45 | $1,019 |
| | EXIT SIGNS | 1 | EA | $162.18 | $ 162.18 | $ 54.45 | $217 |

Prepared by: NFB
Date: July 2018

Inc. Village of Westhampton Beach
Phase 1 Sewer System (Alt. No. 1)
Pump Station Take-off

| | | | |
|---|---|---|---|
| **SUBTOTAL CONSTRUCTION COST . . .** | | **$422,585.72** | |
| BOND AND INSURANCE | *3%* | *$12,677.57* | CHECK! |
| **SUBTOTAL . . .** | | **$435,263.29** | |
| OVERHEAD | *10%* | *$43,526* | |
| **SUBTOTAL . . .** | | **$478,789.62** | CHECK! |
| PROFIT | *10%* | *$47,878.96* | |
| **SUBTOTAL . . .** | | **$526,668.59** | CHECK! |
| CONTINGENCY | *10%* | *$52,667* | |
| **TOTAL CONSTRUCTION COST . . .** | | **$579,335.44** | CHECK! |
| | | $580,000.00 | |

Prepared by: NFB
Date: July 2018

Inc. Village of Westhampton Beach
Phase 1 Sewer System (Alt. No. 1)
Sewer Take-off

## Gravity and Low Pressure Sewers

| ITEM NO. | ITEM DESCRIPTION | UNITS | QTY NORTH | QTY SOUTH | Unit Price (Eng. Est.) | Construction Cost Opinion NORTH | Construction Cost Opinion SOUTH | Construction Cost Opinion TOTAL |
|---|---|---|---|---|---|---|---|---|
| 1 | 4' Diameter Manhole with casting | EA | 20 | 12 | $ 6,000 | $ 120,000 | $ 72,000 | $ 192,000 |
| 2 | 5' Diameter Manhole with casting | EA | 0 | 3 | $ 7,000 | $ - | $ 21,000 | $ 21,000 |
| 3 | Paint Castings | EA | 20 | 17 | $ 50 | $ 1,000 | $ 850 | $ 1,850 |
| 4 | 8" Diameter PVC DR-18 Gravity Sewer | LF | 2,303 | 1,447 | $ 285 | $ 656,355 | $ 412,395 | $ 1,068,750 |
| 5 | 10" Diameter PVC DR-18 Gravity Sewer | LF | 0 | 0 | $ 315 | $ - | $ - | $ - |
| 6 | Building Connection Piping | LF | 550 | 550 | $ 100 | $ 55,000 | $ 55,000 | $ 110,000 |
| 7 | HDPE DR-11 LPS | LF | 0 | 1,667 | $ 150 | $ - | $ 250,050 | $ 250,050 |
| 8 | LPS Lateral Assembly | EA | 0 | 8 | $ 1,000 | $ - | $ 8,000 | $ 8,000 |
| 9 | LPS Cleanouts | EA | 0 | 2 | $ 2,000 | $ - | $ 4,000 | $ 4,000 |
| 10 | LPS Air Release Manholes | EA | 0 | 2 | $ 3,500 | $ - | $ 5,835 | $ 5,835 |
| 11 | LPS Drain Manholes | EA | 0 | 2 | $ 4,500 | $ - | $ 7,502 | $ 7,502 |
| 12 | Pipe Jacking Sending Pit | EA | 0 | 0 | $ 25,000 | $ - | $ - | $ - |
| 13 | Pipe Jacking Receiving Pit | EA | 0 | 0 | $ 15,000 | $ - | $ - | $ - |
| 14 | 30" Diameter Steel Pipe Jacking Sleeve | LF | 0 | 0 | $ 600 | $ - | $ - | $ - |
| 15 | Test Pits | EA | 19 | 24 | $ 750 | $ 14,265 | $ 18,320 | $ 32,585 |
| 16 | Marking Tape | LF | 2,853 | 3,664 | $ 1 | $ 2,853 | $ 3,664 | $ 6,517 |
| 17 | Erosion Control | LS | 22,500 | 22,500 | $ 45,000 | $ 22,500 | $ 22,500 | $ 45,000 |
| 18 | Temporary Support of Utility Pole | EA | 1 | 1 | $ 1,200 | $ 1,200 | $ 1,200 | $ 2,400 |
| 19 | Traffic Signal Detection Loops | EA | 0 | 0 | $ 1,000 | $ - | $ - | $ - |
| 20 | Sawcutting | LF | 5,722 | 7,344 | $ 6 | $ 34,332 | $ 44,064 | $ 78,396 |
| 21 | Remove and Dispose of Asphalt Pavement and Base | SY | 1,902 | 2,443 | $ 5 | $ 9,510 | $ 12,213 | $ 21,723 |
| 22 | 4-Inch Asphalt Aggregate Dense Pavement Base Course - County Roads (NYSDOT Type 1) | CY | 282 | 282 | $ 70 | $ 19,724 | $ 19,724 | $ 39,449 |
| 23 | 1-1/2 Inch Bituminous Concrete Binder Course - County Roads (NYSDOT Type 3) | TON | 214 | 214 | $ 110 | $ 23,537 | $ 23,537 | $ 47,075 |
| 24 | 1-1/4 Inch Bituminous Concrete Pavement Top Course - County Roads (NYSDOT Type 6F) | TON | 178 | 178 | $ 110 | $ 19,614 | $ 19,614 | $ 39,229 |
| 25 | Temporary Bituminous Pavement | TON | 285 | 285 | $ 110 | $ 31,383 | $ 31,383 | $ 62,766 |
| 26 | Portland Cement Concrete Pavement | SY | 0 | | $ 150 | $ - | $ - | $ - |
| 27 | Portland Cement Concrete Curb | LF | 28 | 44 | $ 10 | $ 280 | $ 440 | $ 720 |
| 28 | Portland Cement Concrete Sidewalk | SY | 36 | 71 | $ 85 | $ 3,022 | $ 6,044 | $ 9,067 |
| 29 | Portland Cement Concrete Driveway Apron | EA | 4 | 4 | $ 2,000 | $ 8,000 | $ 8,000 | $ 16,000 |
| 30 | Portland Cement Handicapped Ramp | EA | 2 | 2 | $ 500 | $ 1,000 | $ 1,000 | $ 2,000 |
| 31 | Pavement Striping | LF | 3,000 | 4,800 | $ 1 | $ 3,000 | $ 4,800 | $ 7,800 |
| 32 | Crosswalk Striping | LF | 0 | 500 | $ 20 | $ - | $ 10,000 | $ 10,000 |
| 33 | Stop Line Striping | LF | 0 | 0 | $ 20 | $ - | $ - | $ - |
| 34 | Painted Arrows | EA | 0 | 0 | $ 500 | $ - | $ - | $ - |
| 35 | Painted Handicapped Parking Zones & Symbols | EA | 6 | 8 | $ 500 | $ 3,000 | $ 4,000 | $ 7,000 |
| 36 | Laboratory Testing Cash Allowance | LS | $ 25,000 | $ 25,000 | $ 50,000 | $ 25,000 | $ 25,000 | $ 50,000 |
| 37 | Utility Relocation Allowance | LS | $ 37,500 | $ 37,500 | $ 75,000 | $ 37,500 | $ 37,500 | $ 75,000 |
| 38 | Dewatering | DAY | 48 | 61 | $ 2,750 | $ 130,763 | $ 167,933 | $ 298,696 |
| 39 | LPS Grinder Station (furnish & install) - Simplex | EA | | 63 | $ 16,000 | $ - | $ 1,008,000 | $ 1,008,000 |
| 40 | LPS Grinder Station (furnish & install) - Duplex | EA | | 7 | $ 29,500 | $ - | $ 206,500 | $ 206,500 |

| | | | |
|---|---|---|---|
| **SUBTOTAL:** | **$ 1,222,839** | **$ 2,512,069** | **$ 3,734,908** |
| **CONSTRUCTION CONTINGENCY (10%)** | **$ 122,284** | **$ 251,207** | **$ 373,491** |
| **Mobilization – 4.0 % of the subtotal** | $ 53,900 | $ 110,600 | $ 164,400 |
| **Bonds – 1.5 % of the subtotal** | $ 20,200 | $ 41,500 | $ 61,700 |
| **Insurance – 1.0 % of the subtotal** | $ 13,500 | $ 27,700 | $ 41,100 |
| **Miscellaneous Requirements – 2.0 % of the subtotal** | $ 27,000 | $ 55,300 | $ 82,200 |
| **TOTAL** | **$ 1,459,723** | **$ 2,998,376** | **$ 4,457,799** |
| **SAY** | **$ 1,460,000** | **$ 2,999,000** | **$ 4,458,000** |

Prepared by: NFB
Date: July 2018

Inc. Village of Westhampton Beach
Phase 1 Sewer System (Alt. No. 2)
Force Main Take-off

## Force Mains

| ITEM NO. | ITEM DESCRIPTION | UNITS | QTY NORTH | Unit Price (Eng. Est.) | Construction Cost Opinion NORTH | Construction Cost Opinion TOTAL |
|---|---|---|---|---|---|---|
| 1 | Paint Castings | EA | **41** | $ 50 | $ 2,067 | $ 2,067 |
| 2 | PVC DR-18 Force Main | LF | **40** | $ 130 | $ 5,200 | $ 5,200 |
| 3 | PVC DR-18 Force Main (parallel) | LF | **12,360** | $ 165 | $ 2,039,400 | $ 2,039,400 |
| 4 | Cleanouts | EA | **41** | $ 3,500 | $ 144,667 | $ 144,667 |
| 5 | Pipe Jacking Sending Pit | EA | **1** | $ 25,000 | $ 25,000 | $ 25,000 |
| 6 | Pipe Jacking Receiving Pit | EA | **1** | $ 15,000 | $ 15,000 | $ 15,000 |
| 7 | 30" Diameter Steel Pipe Jacking Sleeve | LF | **100** | $ 600 | $ 60,000 | $ 60,000 |
| 8 | Test Pits | EA | **83** | $ 750 | $ 62,000 | $ 62,000 |
| 9 | Marking Tape | LF | **12,400** | $ 1 | $ 12,400 | $ 12,400 |
| 10 | Erosion Control | LS | **$ 100,000** | $ 100,000 | $ 100,000 | $ 100,000 |
| 11 | Traffic Signal Detection Loops | EA | **10** | $ 1,000 | $ 10,000 | $ 10,000 |
| 12 | Sawcutting | LF | **24,616** | $ 6 | $ 147,696 | $ 147,696 |
| 13 | Remove and Dispose of Asphalt Pavement and Base | SY | **8,267** | $ 5 | $ 41,333 | $ 41,333 |
| 14 | 4-Inch Asphalt Aggregate Dense Pavement Base Course - County Roads (NYSDOT Type 1) | CY | **1,225** | $ 70 | $ 85,728 | $ 85,728 |
| 15 | 1-1/2 Inch Bituminous Concrete Binder Course - County Roads (NYSDOT Type 3) | TON | **930** | $ 110 | $ 102,300 | $ 102,300 |
| 16 | 1-1/4 Inch Bituminous Concrete Pavement Top Course - County Roads (NYSDOT Type 6F) | TON | **775** | $ 110 | $ 85,250 | $ 85,250 |
| 17 | Temporary Bituminous Pavement | TON | **1,240** | $ 110 | $ 136,400 | $ 136,400 |
| 18 | Portland Cement Concrete Pavement | SY | **0** | $ 150 | $ - | $ - |
| 19 | Portland Cement Concrete Curb | LF | **100** | $ 10 | $ 1,000 | $ 1,000 |
| 20 | Portland Cement Concrete Sidewalk | SY | **44** | $ 85 | $ 3,778 | $ 3,778 |
| 21 | Portland Cement Concrete Driveway Apron | EA | **4** | $ 2,000 | $ 8,000 | $ 8,000 |
| 22 | Portland Cement Handicapped Ramp | EA | **4** | $ 500 | $ 2,000 | $ 2,000 |
| 23 | Pavement Striping | LF | **49,600** | $ 1 | $ 49,600 | $ 49,600 |
| 24 | Crosswalk Striping | LF | **3,000** | $ 20 | $ 60,000 | $ 60,000 |
| 25 | Stop Line Striping | LF | **300** | $ 20 | $ 6,000 | $ 6,000 |
| 26 | Painted Arrows | EA | **16** | $ 500 | $ 8,000 | $ 8,000 |
| 27 | Painted Handicapped Parking Zones & Symbols | EA | **0** | $ 500 | $ - | $ - |
| 28 | Laboratory Testing Cash Allowance | LS | **$ 30,000** | $ 40,000 | $ 30,000 | $ 30,000 |
| 29 | Utility Relocation Allowance | LS | **$ 65,000** | $ 65,000 | $ 65,000 | $ 65,000 |
| 30 | Flow meter installation at SCSD #24 STP | EA | **1** | $ 5,000 | $ 5,000 | $ 5,000 |

| | | |
|---|---|---|
| **SUBTOTAL:** | **$ 3,312,819** | **$ 3,312,819** |
| **CONSTRUCTION CONTINGENCY (10%)** | **$ 331,282** | **$ 331,282** |
| **Mobilization – 4.0 % of the subtotal** | $ 145,800 | $ 145,800 |
| **Bonds – 1.5 % of the subtotal** | $ 54,700 | $ 54,700 |
| **Insurance – 1.0 % of the subtotal** | $ 36,500 | $ 36,500 |
| **Miscellaneous Requirements – 2.0 % of the subtotal** | $ 72,900 | $ 72,900 |
| **TOTAL** | **$ 3,954,001** | **$ 3,954,001** |
| **SAY** | **$ 3,955,000** | **$ 3,955,000** |

Prepared by: NFB
Date: July 2018

Inc. Village of Westhampton Beach
Phase 1 Sewer System (Alt. No. 2)
Pump Station Take-off

**Pump Station #1 - North of Main Street**

| | Scope of Work | Quantity | Unit | Unit ($) | Total Unit Cost Material | Total Cost Labor | Cost | |
|---|---|---|---|---|---|---|---|---|
| Item # | Item Description | | | | | | | |
| 1 | **MECHANICAL AND PLUMBING** | | | | | | **$123,821.59** | |
| | FURNISH AND INSTALL INFLUENT SUBMERSIBLE PUMPS W/ BASE ELBOW & GUIDE RAILS - INCLUDES PANEL | 2 | EA | $26,700.00 | $ 53,400.00 | $ 11,729.03 | $65,129.03 | |
| | | | | | | | $0.00 | |
| | 4" DIA. CLASS 53, AWWA C151, 90 DEG. ELBOW (FLANGED) | 4 | EA | $137.00 | $ 548.00 | $ 296.15 | $844.15 | |
| | 4" DIA. WEIGHTED AND LEVER SWING CHECK VALVE (FLANGED) | 2 | EA | $1,416.00 | $ 2,832.00 | $ 148.07 | $2,980.07 | |
| | 4" DIA. ECC. PLUG VALVE (FLANGED) | 3 | EA | $727.00 | $ 2,181.00 | $ 560.20 | $2,741.20 | |
| | 4" DIA. CLASS 53, AWWA C151, TEE (FLANGED) | 1 | EA | $250.00 | $ 250.00 | $ 93.37 | $343.37 | |
| | 4" DIA. WYE FITTING (FLANGED) | 1 | EA | $231.00 | $ 231.00 | $ 93.37 | $324.37 | |
| | 4" DIA. FLANGE ADAPTER STYLE DJ400 (DISMANTLING JOINT) | 1 | EA | $704.61 | $ 704.61 | $ 186.73 | $891.34 | |
| | 4" DIA. LINK SEAL | 7 | EA | $125.00 | $ 875.00 | $ 518.26 | $1,393.26 | |
| | 4" DIA. (DUCTILE IRON) | 38.5 | LF | $50.00 | $ 1,925.00 | $ 1,113.46 | $3,038.46 | |
| | 4" DIA. RESTRAINED JOINT PIPE COUPLING | 2 | EA | $704.61 | $ 1,409.22 | $ 373.47 | $1,782.69 | |
| | 4" DIA. MAGNETIC TYPE FLOW METER | 1 | EA | $5,000.00 | $ 5,000.00 | $ 910.27 | $5,910.27 | |
| | PRESSURE GAUGE | 1 | EA | $50.00 | $ 50.00 | $ 27.35 | $77.35 | |
| | 4" FLANGED X FEMALE COUPLER, STAINLESS STEEL | 1 | EA | $930.50 | $ 930.50 | $ 74.04 | $1,004.54 | |
| | | | | | | | $0.00 | |
| | WET WELL EXHAUST FAN | 1 | EA | $2,500.00 | $ 2,500.00 | $ 429.60 | $2,929.60 | |
| | | | | | | | $0.00 | |
| | INFLUENT MIXING SYSTEM (PHI PULSED AIR MIXING) | 1 | EA | $25,000.00 | $ 25,000.00 | $ 5,602.02 | $30,602.02 | |
| | 1" DIA. SCH40 PVC PIPE | 40 | LF | $3.71 | $ 148.40 | $ 186.73 | $335.13 | |
| | 1" DIA. SCH40 PVC TEE | 3 | EA | $19.13 | $ 57.39 | $ 140.05 | $197.44 | |
| | 1" DIA. SCH 40 PVC 90 DEG. ELBOW | 6 | EA | $7.30 | $ 43.80 | $ 444.22 | $488.02 | |
| | | | | | | | | |
| | MUFFIN MONSTER IN-WELL GRINDER (30005-0008-GI) - INCLUDES CONTROLLER | 0 | EA | $32,051.00 | | | $0.00 | *optional item |
| | | | | | | | | |
| | Portable Jib Crane at Wet Well | 1 | EA | $2,500.00 | $ 2,500.00 | $ 309.29 | $2,809.29 | |
| | | | | | | | | |
| 2 | **STRUCTURES** | | | | | | **$133,161.42** | |
| | *PUMP STATION - WET WELL* | | | | | | | |
| | PUMP STATION EXCAVATION - SOIL | 96 | CY | $14.24 | $ 1,367.04 | | $1,367 | |
| | PUMP STATION WOOD SHORING | 864 | SF | $7.41 | $ 6,402.24 | | $6,402 | |
| | PUMP STATION 8 FTDIA - PRECAST | 16 | LF | $500.00 | $ 13,625.00 | $ 35,519.76 | $49,145 | |
| | PUMP STATION 8 ft DIA. - TOP SLAB | 1 | EA | $1,200.00 | $ 1,200.00 | $ 273.23 | $1,473 | |
| | BACKFILL | 63 | CY | $20.97 | $ 1,310.76 | | $1,311 | |
| | DISPOSE SPOILS/TIPPING FEE | 54.3 | TN | $100.69 | $ 5,463.36 | | $5,463 | |
| | | | | | | | $0 | |
| | *PUMP STATION VALVE VAULT* | | | | | | $0 | |
| | VALVE VAULT EXCAVATION - SOIL | 12 | CY | $14.24 | $ 177.21 | | $177 | |
| | VALVE VAULT WOOD SHORING | 196 | SF | $7.41 | $ 1,452.36 | | $1,452 | |
| | PUMP STATION 4FT X 6FT - PRECAST | 1 | EA | $3,500.00 | $ 3,500.00 | $ 1,092.92 | $4,593 | |
| | PUMP STATION 4FT X 6 FT - TOP SLAB | 1 | EA | $1,200.00 | $ 1,200.00 | $ 409.84 | $1,610 | |
| | BACKFILL | 3 | CY | $20.97 | $ 70.68 | | $71 | |
| | DISPOSE SPOILS/TIPPING FEE | 14.7 | TN | $100.69 | $ 1,480.14 | | $1,480 | |
| | | | | | | | | |
| | *PUMP STATION FLOW METER PIT* | | | | | | $0 | |
| | VALVE VAULT EXCAVATION - SOIL | 9 | CY | $14.24 | $ 132.91 | | $133 | |
| | VALVE VAULT WOOD SHORING | 168 | SF | $7.41 | $ 1,244.88 | | $1,245 | |
| | PUMP STATION 4FT X 4FT - PRECAST | 1 | EA | $3,250.00 | $ 3,250.00 | $ 1,092.92 | $4,343 | |
| | PUMP STATION 4FT X 4 FT - TOP SLAB | 1 | EA | $1,000.00 | $ 1,000.00 | $ 409.84 | $1,410 | |
| | BACKFILL | 3 | CY | $20.97 | $ 59.80 | | $60 | |
| | DISPOSE SPOILS/TIPPING FEE | 10.5 | TN | $100.69 | $ 1,057.25 | | $1,057 | |
| | | | | | | | $0 | |
| | *PUMP STATION BUILDING FOUNDATION* | | | | | | $0 | |
| | *PRECAST BUILDING (12' X 18')* | *1* | *EA* | $20,000.00 | $ 25,500.00 | $ 8,014.86 | $33,515 | |
| | BUILDING FOUNDATION EXCAVATION - SOIL | 40 | CY | $14.24 | $ 569.60 | | $570 | |
| | BLDG (FOOTING) - CONCRETE | 4.4 | CY | $217.36 | $ 966.04 | | $966 | |
| | BLDG (FOUNDATION WALLS) - CONCRETE | 5.2 | CY | $217.36 | $ 1,132.69 | | $1,133 | |
| | CONCRETE WASTE 5% | 0.5 | CY | $113.00 | $ 54.55 | | $55 | |
| | CONCRETE FORMWORK | 540.0 | SF | $12.91 | $ 6,971.40 | | $6,971 | |
| | #5 REBAR | 0.5 | TON | $1,752.66 | $ 795.19 | | $795 | |
| | BACKFILL | 1 | CY | $20.97 | $ 23.57 | | $24 | |
| | DISPOSE SPOILS/TIPPING FEE | 63.0 | TN | $100.69 | $ 6,341.39 | | $6,341 | |
| | | | | | | | | |
| 3 | **SITE WORK** | | | | | | **$51,678.62** | |
| | PRECAST MANHOLE STRUCTURE | 1.0 | EA | $6,000.00 | $ 6,000.00 | | $6,000 | |
| | MANHOLE CASTING | 1.0 | EA | $657.50 | $ 657.50 | | $658 | |
| | TRENCH EXCAVATION W/ TRENCH BOX | 37.0 | CY | $14.24 | $ 527.41 | | $527 | |
| | BACKFILL | 18.4 | CY | $20.97 | $ 386.27 | | $386 | |
| | COMPACTED BASE | 3.7 | CY | $59.83 | $ 221.59 | | $222 | |
| | DISPOSE SPOILS/TIPPING FEE | 10.1 | TN | $100.69 | $ 1,012.25 | | $1,012 | |
| | CONCRETE 3000 PSI (Pour From Chute) | 3.7 | CY | $217.36 | $ 809.31 | | $809 | |
| | CONCRETE WASTE 5% | 0.2 | CY | $113.00 | $ 21.04 | | $21 | |
| | | | | | | | | |
| | 8" DIA. PUMP STATION INFLUENT PIPING | 146 | LF | $18.03 | $ 2,632.38 | | $2,632 | |
| | TRENCH EXCAVATION W/ TRENCH BOX | 324.4 | CY | $14.24 | $ 4,620.09 | | $4,620 | |
| | BACKFILL | 289.1 | CY | $20.97 | $ 6,061.39 | | $6,061 | |
| | COMPACTED BASE | 32.4 | CY | $59.83 | $ 1,941.15 | | $1,941 | |
| | DISPOSE SPOILS/TIPPING FEE | 19.1 | TN | $100.69 | $ 1,924.45 | | $1,924 | |
| | | | | | | | | |
| | GRADING AND PAVING | | | | | | | |
| | SITE GRADING FOR PAVEMENT | 108.9 | SY | $1.93 | $ 210.16 | | $210 | |
| | BINDER COURSE WITH STONE BASE | 980.0 | SF | $4.43 | $ 4,341.40 | | $4,341 | |
| | TOP COURSE | 108.9 | SY | $11.67 | $ 1,270.73 | | $1,271 | |
| | | | | | | | $0 | |
| | SIDEWALKS & LANDINGS | 16.0 | SF | $6.50 | $ 104.00 | | $104 | |
| | CURBS | 0.0 | LF | $14.75 | | | $0 | |
| | | | | | | | | |
| | TOPSOIL | 0.0 | SY | $5.02 | | | $0 | |

Prepared by: NFB
Date: July 2018

Inc. Village of Westhampton Beach
Phase 1 Sewer System (Alt. No. 2)
Pump Station Take-off

| | | | | | | | | |
|---|---|---|---|---|---|---|---|---|
| | SEEDING | 0.0 | SY | $0.64 | | | $0 | |
| | | | | | | | $0 | |
| | 6" DIA. BOLLARDS | 6.0 | EA | $750.00 | $ 4,500.00 | | $4,500 | |
| | | | | | | | $0 | |
| | FIELD INLET PROTECTION | 4.0 | EA | $150.00 | $ 600.00 | | $600 | |
| | SILT FENCE | 300.0 | LF | $2.75 | $ 825.00 | | $825 | |
| | SILT FENCE MAINTENANCE | 2.0 | PER 6 MO. | $206.25 | $ 412.50 | | $413 | |
| | | | | | | | $0 | |
| | FENCE | 126.0 | LF | $100.00 | $ 12,600.00 | | $12,600 | |
| **4** | **ELECTRICAL** | | | | | | **$143,050.84** | |
| | NEW ELECTRIC SERVICE PROVIDED BY PSE&G | | | | | | | |
| | WIRE - UTILITY POLE TO TRANSFORMER (4-500 KCMIL) | 100 | LF | $223.75 | $ 22,374.50 | | $22,375 | |
| | TERMINAL LUGS | 8 | EA | $90.11 | $ 720.88 | | $721 | |
| | CONDUIT - UTILITY POLE TO CONTROL BUILDING (4" PVC) | 100 | LF | $10.79 | $ 1,079.00 | | $1,079 | |
| | | | | | | | $0 | |
| | SITE LIGHTING | 2 | EA | $3,600.00 | $ 7,200.00 | | $7,200 | |
| | | | | | | | $0 | |
| | INFLUENT PUMP CONTROL PANEL & COMPLETE WIRE TERMINATIONS | 1 | MH | $54.45 | | $ 13,066.99 | $13,067 | |
| | | | | | | | $0 | |
| | LEVEL TRANSDUCER | 1 | EA | $1,500.00 | $ 1,500.00 | | $1,500 | |
| | FLOATS | 3 | EA | $100.00 | $ 300.00 | | $300 | |
| | DIGITAL CHART RECORDER | 1 | EA | $2,500.00 | $ 2,500.00 | | $2,500 | |
| | AUTO DIALER | 1 | EA | $500.00 | $ 500.00 | | $500 | |
| | BREAKER PANEL | 1 | EA | $3,500.00 | $ 3,500.00 | | $3,500 | |
| | ELECTRICAL EQUIPMENT | 1 | EA | $500.00 | $ 500.00 | | $500 | |
| | TRANSFER SWITCH | 1 | EA | $9,500.00 | $ 9,500.00 | | $9,500 | |
| | 40KW BACK UP GENERATOR WITH SOUND PROOF ENCLOSURE | 1 | EA | $50,000.00 | $ 50,000.00 | | $50,000 | |
| | | | | | | | $0 | |
| | #10 WIRE | 400 | LF | $9.24 | $ 3,696.00 | | $3,696 | |
| | #12 WIRE | 800 | LF | $8.98 | $ 7,184.00 | | $7,184 | |
| | 1/0 WIRE | 200 | LF | $15.25 | $ 3,050.00 | | $3,050 | |
| | PERFORM CABLE AND SPLICE TESTING | 20 | SPLICE | $113.04 | $ 2,260.80 | | $2,261 | |
| | SWITCHES | 16 | EA | $123.04 | $ 1,968.64 | | $1,969 | |
| | RECEPTACLES GFCI | 10 | EA | $153.04 | $ 1,530.40 | | $1,530 | |
| | CABLE TERMINATIONS | 56 | EA | $113.04 | $ 6,330.24 | | $6,330 | |
| | TESTING | 1 | MH | $54.45 | | $ 871.13 | $871 | |
| | | | | | | | $0 | |
| | INTERIOR LED LIGHTING FIXTURES (HIGH BAY SURFACE MOUNTED ROUND, 150 WATTS) | 2 | EA | $1,036.64 | $ 2,073.28 | $ 108.89 | $2,182 | |
| | EXTERIOR LED LIGHTING FIXTURES (110 WATT) | 1 | EA | $965.01 | $ 965.01 | $ 54.45 | $1,019 | |
| | EXIT SIGNS | 1 | EA | $162.18 | $ 162.18 | $ 54.45 | $217 | |
| | | | | | | **SUBTOTAL CONSTRUCTION COST . . .** | **$451,712.47** | |
| | | | | | | BOND AND INSURANCE *3%* | *$13,551.37* | CHECK! |
| | | | | | | **SUBTOTAL . . .** | **$465,263.85** | |
| | | | | | | OVERHEAD *10%* | *$46,526* | |
| | | | | | | **SUBTOTAL . . .** | **$511,790.23** | CHECK! |
| | | | | | | PROFIT *10%* | *$51,179.02* | |
| | | | | | | **SUBTOTAL . . .** | **$562,969.25** | CHECK! |
| | | | | | | CONTINGENCY *10%* | *$56,297* | |
| | | | | | | **TOTAL CONSTRUCTION COST . . .** | **$619,266.18** | CHECK! |
| | | | | | | | $620,000.00 | - No pump station ne |

Prepared by: NFB
Date: July 2018

Inc. Village of Westhampton Beach
Phase 1 Sewer System (Alt. No. 2)
Sewer Take-off

## Low Pressure Sewers

| ITEM NO. | ITEM DESCRIPTION | UNITS | QTY NORTH | QTY SOUTH | Unit Price (Eng. Est.) | Construction Cost Opinion NORTH | Construction Cost Opinion SOUTH | Construction Cost Opinion TOTAL |
|---|---|---|---|---|---|---|---|---|
| 1 | 4' Diameter Manhole with casting | EA | 1 | 0 | $ 6,000 | $ 6,000 | $ - | $ 6,000 |
| 2 | 5' Diameter Manhole with casting | EA | 0 | 0 | $ 7,000 | $ - | $ - | $ - |
| 3 | Paint Castings | EA | 1 | 0 | $ 50 | $ 50 | $ - | $ 50 |
| 4 | 8" Diameter PVC DR-18 Gravity Sewer | LF | 0 | 0 | $ 285 | $ - | $ - | $ - |
| 5 | 10" Diameter PVC DR-18 Gravity Sewer | LF | 0 | 0 | $ 315 | $ - | $ - | $ - |
| 6 | Building Connection Piping | LF | 550 | 550 | $ 100 | $ 55,000 | $ 55,000 | $ 110,000 |
| 7 | HDPE DR-11 LPS | LF | 2,303 | 3,114 | $ 150 | $ 345,450 | $ 467,100 | $ 812,550 |
| 8 | LPS Lateral Assembly | EA | 19 | 88 | $ 1,000 | $ 19,000 | $ 88,000 | $ 107,000 |
| 9 | LPS Cleanouts | EA | 8 | 10 | $ 2,000 | $ 15,353 | $ 20,760 | $ 36,113 |
| 10 | LPS Air Release Manholes | EA | 4 | 4 | $ 3,500 | $ 14,000 | $ 14,000 | $ 28,000 |
| 11 | LPS Drain Manholes | EA | 4 | 4 | $ 4,500 | $ 18,000 | $ 18,000 | $ 36,000 |
| 12 | Pipe Jacking Sending Pit | EA | 0 | 0 | $ 25,000 | $ - | $ - | $ - |
| 13 | Pipe Jacking Receiving Pit | EA | 0 | 0 | $ 15,000 | $ - | $ - | $ - |
| 14 | 30" Diameter Steel Pipe Jacking Sleeve | LF | 0 | 0 | $ 600 | $ - | $ - | $ - |
| 15 | Test Pits | EA | 15 | 21 | $ 750 | $ 11,515 | $ 15,570 | $ 27,085 |
| 16 | Marking Tape | LF | 2,853 | 3,664 | $ 1 | $ 2,853 | $ 3,664 | $ 6,517 |
| 17 | Erosion Control | LS | 22,500 | 22,500 | $ 45,000 | $ 22,500 | $ 22,500 | $ 45,000 |
| 18 | Temporary Support of Utility Pole | EA | 1 | 1 | $ 1,200 | $ 1,200 | $ 1,200 | $ 2,400 |
| 19 | Traffic Signal Detection Loops | EA | 0 | 0 | $ 1,000 | $ - | $ - | $ - |
| 20 | Sawcutting | LF | 5,722 | 7,344 | $ 6 | $ 34,332 | $ 44,064 | $ 78,396 |
| 21 | Remove and Dispose of Asphalt Pavement and Base | SY | 1,902 | 2,443 | $ 5 | $ 9,510 | $ 12,213 | $ 21,723 |
| 22 | 4-Inch Asphalt Aggregate Dense Pavement Base Course - County Roads (NYSDOT Type 1) | CY | 282 | 282 | $ 70 | $ 19,724 | $ 19,724 | $ 39,449 |
| 23 | 1-1/2 Inch Bituminous Concrete Binder Course - County Roads (NYSDOT Type 3) | TON | 214 | 214 | $ 110 | $ 23,537 | $ 23,537 | $ 47,075 |
| 24 | 1-1/4 Inch Bituminous Concrete Pavement Top Course - County Roads (NYSDOT Type 6F) | TON | 178 | 178 | $ 110 | $ 19,614 | $ 19,614 | $ 39,229 |
| 25 | Temporary Bituminous Pavement | TON | 285 | 285 | $ 110 | $ 31,383 | $ 31,383 | $ 62,766 |
| 26 | Portland Cement Concrete Pavement | SY | 0 | | $ 150 | $ - | $ - | $ - |
| 27 | Portland Cement Concrete Curb | LF | 28 | 44 | $ 10 | $ 280 | $ 440 | $ 720 |
| 28 | Portland Cement Concrete Sidewalk | SY | 36 | 71 | $ 85 | $ 3,022 | $ 6,044 | $ 9,067 |
| 29 | Portland Cement Concrete Driveway Apron | EA | 4 | 4 | $ 2,000 | $ 8,000 | $ 8,000 | $ 16,000 |
| 30 | Portland Cement Handicapped Ramp | EA | 2 | 2 | $ 500 | $ 1,000 | $ 1,000 | $ 2,000 |
| 31 | Pavement Striping | LF | 3,000 | 4,800 | $ 1 | $ 3,000 | $ 4,800 | $ 7,800 |
| 32 | Crosswalk Striping | LF | 0 | 500 | $ 20 | $ - | $ 10,000 | $ 10,000 |
| 33 | Stop Line Striping | LF | 0 | 0 | $ 20 | $ - | $ - | $ - |
| 34 | Painted Arrows | EA | 0 | 0 | $ 500 | $ - | $ - | $ - |
| 35 | Painted Handicapped Parking Zones & Symbols | EA | 6 | 8 | $ 500 | $ 3,000 | $ 4,000 | $ 7,000 |
| 36 | Laboratory Testing Cash Allowance | LS | $ 25,000 | $ 25,000 | $ 50,000 | $ 25,000 | $ 25,000 | $ 50,000 |
| 37 | Utility Relocation Allowance | LS | $ 37,500 | $ 37,500 | $ 75,000 | $ 37,500 | $ 37,500 | $ 75,000 |
| 38 | Dewatering | DAY | 48 | 61 | $ 2,750 | $ 130,763 | $ 167,933 | $ 298,696 |
| 39 | LPS Grinder Station (furnish & install) - Simplex | EA | 1 | 63 | $ 16,000 | $ 16,000 | $ 1,008,000 | $ 1,024,000 |
| 40 | LPS Grinder Station (furnish & install) - Duplex | EA | 18 | 25 | $ 29,500 | $ 531,000 | $ 737,500 | $ 1,268,500 |

| | | | |
|---|---|---|---|
| **SUBTOTAL:** | **$ 1,407,587** | **$ 2,866,548** | **$ 4,274,135** |
| **CONSTRUCTION CONTINGENCY (10%)** | **$ 140,759** | **$ 286,655** | **$ 427,414** |
| **Mobilization – 4.0 % of the subtotal** | $ 62,000 | $ 126,200 | $ 188,100 |
| **Bonds – 1.5 % of the subtotal** | $ 23,300 | $ 47,300 | $ 70,600 |
| **Insurance – 1.0 % of the subtotal** | $ 15,500 | $ 31,600 | $ 47,100 |
| **Miscellaneous Requirements – 2.0 % of the subtotal** | $ 31,000 | $ 63,100 | $ 94,100 |
| **TOTAL** | **$ 1,680,146** | **$ 3,421,403** | **$ 5,101,449** |
| **SAY** | **$ 1,681,000** | **$ 3,422,000** | **$ 5,102,000** |