Final GEIS

REVISED SOLID WASTE ACTION MANAGEMENT PLAN

Town of Southampton, New York

March 22, 1990
Revised September 1992

Printed on Recycled Paper

MALCOLM PIRNIE

ENVIRONMENTAL ENGINEERS, SCIENTISTS & PLANNERS

Printed on Recycled Paper

MALCOLM PIRNIE

MALCOLM PIRNIE, INC.
ENVIRONMENTAL ENGINEERS, SCIENTISTS & PLANNERS

September 4, 1992

Alan G. Woodard, Ph.D.
Solid Waste Management Specialist
New York State Department of
Environmental Conservation
50 Wolf Road
Albany, New York 12233-4016

Re: Town of Southampton
Solid Waste Action Management Plan

Dear Mr. Woodard:

Enclosed are two (2) copies of the Town of Southampton's Revised Solid Waste Action Management Plan. The Town Board passed a Resolution today authorizing submission of the Revised SWAMP to the NYSDEC. Responses to the DEC comments made on the Original SWAMP in 1990, along with the Town's responses, have been provided as an Appendix to the document.

It is our understanding that the review process should take about 30 days, at which time the Town and the DEC will meet to discuss comments on the document.

Please feel free to contact us if you have any questions or require additional copies of the Revised SWAMP.

Very truly yours,

MALCOLM PIRNIE, INC.

Raul Torres

Raul A. Torres, P.E.
Associate

rf/235RAT

c: D. Blackman, DEC w/encl.
R. Cowen, DEC w/encl.
J. Howell, DEC w/encl.
R. Mitrey, DEC w/encl.

1352-04-1205

2 CORPORATE PARK DRIVE BOX 751 WHITE PLAINS, NY 10602-0751 914-694-2100 FAX 914-694-9286

RESOLVED, that the Town Clerk is hereby authorized to publish the following Notice of Completion of the Final Generic Environmental Impact Statement for the Solid Waste Action Management Plan pursuant to Part 617 of the implementing regulations pertaining to Article 8 (State Environmental Quality Review) of the Environmental Conservation Law:

NOTICE OF COMPLETION OF THE FINAL
GENERIC ENVIRONMENTAL IMPACT STATEMENT FOR
THE SOLID WASTE ACTION MANAGEMENT PLAN

Lead Agency: Town of Southampton
Town Board

Address: Town Hall
116 Hampton Road
Southampton, New York 11968

Dated: March 22, 1990

This notice is issued pursuant to Part 617 of the implementing regulations pertaining to Article 8 (State Environmental Quality Review) of the Environmental Conservation Law.

On September 1, 1989, the Town Board accepted a Draft Generic Environmental Impact Statement for the Solid Waste Action Management Plan (SWAMP) and accepted public comment on the document through October 10, 1989. In response to comments received, the Town Board has completed the Final Environmental Impact Statement for the SWAMP. Comments on the Final Environmental Impact Statement will be received by the Town Board through 4:00 p.m. on April 12, 1990. Comments should be delivered to the Contact Person named below with copies to Malcolm Pirnie, Inc. Upon review and analysis of final comments, the Town Board will issue its Lead Agency Statement of Findings.

Description of Action:

The proposed action discussed in the FGEIS is the development of a long term solid waste management program that eventually eliminates the landfill of raw refuse in compliance with the Long Island Landfill Law. The SWAMP analyzes many issues including the mandatory recycling plan, the evaluation and selection of waste disposal technologies, identification of sites and locations suitable for waste processing, and an implementation schedule.

Location:

An area of the North Sea Landfill will be dedicated for a mixed waste processing facility and a residuals lanfill if an in-Town option is selected. A smaller area of the North Sea Landfill will be dedicated for facilities necessary for supporting out-of-Town facilities if an out-of Town option is selected.

Potential Environmental Impacts:

The FGEIS examines the potential impacts of noise, odors, traffic, air emissions, water use, wastewater discharge, as well as economic and aesthetic effect of construction and operation of the facilities at the North Sea Landfill. Use of land, air, water, and energy resources are also examined.

Copies of the FGEIS are available for inspection at the Town Clerk's Office and the New York State Department of Environmental Conservation's Region ! and Albany offices.

Written comments should be addressed to:

Marietta Seaman, Deputy Supervisor
Town of Southampton
Town Hall
116 Hampton Road
Southampton, New York 11968

Telephone Number: (516) 283-6000

With copies to:

Raul Torres, P.E.
Malcolm Pirnie, Inc.
2 Corporate Park Drive
White Plains, New York 10602

Dated:

Southampton, New York
March 22, 1990

MMS:eff

STATE OF NEW YORK
County of Suffolk
Office of the Clerk of the
Town of Southampton, N.Y. } ss:

(SEAL)

This is to certify that I, Noreen A. McCulley, Deputy Clerk of the Town of Southampton, in the said County of Suffolk, State of New York, have compared the foregoing copy of resolution with the original resolution now on file in this office, and which was passed by the Town Board of the Town of Southampton in said County of Suffolk, on the 22nd day of March, 19 90, and that the same is a correct and true transcript of such original resolution and the whole thereof.

In Witness Whereof, I have hereunto set my hand and affixed the seal of said Town

this 22nd day of March, 19 90.

Noreen A. McCulley

Deputy Clerk of the Town Board, Town of Southampton, Suffolk County, N.Y.

DOCUMENT:

REVISED FINAL GENERIC ENVIRONMENTAL IMPACT STATEMENT

PROJECT:

SOUTHAMPTON SOLID WASTE MANAGEMENT PROGRAM

LOCATION:

SOUTHAMPTON, NEW YORK

LEAD AGENCY:

SOUTHAMPTON TOWN BOARD

PROJECT SPONSOR AND ADDRESS TO WHICH COMMENTS SHOULD BE SENT:

SOUTHAMPTON TOWN BOARD
TOWN HALL
116 HAMPTON ROAD
SOUTHAMPTON, NEW YORK 11968

CONTACT FOR FURTHER INFORMATION:

MARIETTA M. SEAMAN, COUNCILWOMAN
(516) 283-6000

PREPARED BY:

MALCOLM PIRNIE, INC.
2 CORPORATE PARK DRIVE
WHITE PLAINS, NEW YORK 10602

DATE OF ACCEPTANCE:

March 22, 1990 Revised September 1992

MALCOLM PIRNIE

EXPLANATORY NOTE

This Final GEIS incorporates the proposed Southampton Solid Waste Action Management Plan (SWAMP).

The terms "Final GEIS", "GEIS, "Plan", "SWAMP" and "program" are used to describe this document.

SUMMARY OF MODIFICATIONS

To develop the FGEIS, the comments to the Draft GEIS were categorized into seven general areas and responded to accordingly. These seven areas are summarized below. Modifications in the FGEIS have been distinguished by underlining new text.

Regional Approach: The potential for working with Brookhaven or the other East End Towns to process mixed wastes as well as recyclables has been discussed and added as an option in the FGEIS. Although this change may preclude the need for the Town to develop its own facility, it does not change the proposed program of an integrated solid waste management system. Processing of wastes remaining after source separation, whether it is within Southampton or at a regional facility, remains as one component of the system. Modifications related to this issue can be found in Sections 7.3.8, 9.0, 11.0 and the Executive Summary.

Maintaining Plan Flexibility: Several commentors asked that it be made clear that program implementation should remain flexible since the relative costs and risks of the program are high. Appropriate modifications can be found in Sections 7.3.5, 9.0 and 11.0.

Municipal Solid Waste Composting Risks: Concern was expressed that, given the uneven history, unproven markets and cost of MSW composting, the Town should proceed with extra caution if it chooses to implement MSW Composting. See Sections 7.3.1.2, 7.3.5, 9.0 and 11.0 for appropriate modifications.

Waste Reduction: Several commentors expressed an interest in more discussion of waste reduction and that possible local waste reduction initiatives be outlined. A new subsection 6.4 was added to discuss waste reduction and outline possible initiatives. Subsection 9.1 outlines future actions in this area.

Comprehensive Recycling Analysis: The DEC requested additional information and analysis to complete the comprehensive recycling analysis contained in the DGEIS. Additional information on current recycling appears in subsections 3.2.3 and 3.2.4, additional analyses are contained in subsections 5.3, 6.5 and 6.8.1, and recommendations for commercial sector recycling are presented in subsection 9.1.

Augmenting the Town's Solid Waste Organization: Two commentors felt that, as solid waste management becomes a major activity for the Town government, the Town may need to augment its organization to better manage program development. This issue is discussed in Subsection 7.3.7.

Siting Issues: Two commentors recommended that the Town consider purchasing additional land next to the North Sea Landfill while it is still vacant as a buffer against further residential development in the area. This consideration was added to subsection 8.6.

ADDITIONAL MODIFICATIONS

Additional modifications have been made to this FGEIS to reflect refinements in the Town's approach to solid waste management and the basis upon which such refinements were made.

These modifications are included in the end-of-chapter revisions (Chapter Revisions), which are printed on yellow-colored paper, and included throughout this document.

MALCOLM PIRNIE

TOWN OF SOUTHAMPTON
FINAL GENERIC ENVIRONMENTAL
IMPACT STATEMENT FOR
THE SOLID WASTE ACTION MANAGEMENT PLAN

TABLE OF CONTENTS

		Page
1.0	EXECUTIVE SUMMARY	
	Introduction	ES-1
	The Process	ES-2
	Existing Conditions	ES-2
	Integrated Waste Management	ES-4
	Source Separated Recycling	ES-5
	Mixed Waste Processing	ES-7
	Residual Waste Landfilling	ES-8
	Site Selection	ES-9
	Environmental Impacts	ES-10
	Project Implementation	ES-10
2.0	INTRODUCTION	2-1
	2.1 Project Sponsor - Town of Southampton	2-1
	2.2 The Generic Environmental Impact Statement (GEIS) Planning Process	2-2
	2.3 Organization of this Document	2-3
3.0	DESCRIPTION OF THE PROPOSED ACTION	3-1
	3.1 Purpose and Need of the Proposed Action	3-1
	3.2 Existing Solid Waste Management System	3-2
	3.2.1 North Sea Landfill and Transfer Stations	3-2
	3.2.2 Collection	3-4
	3.2.3 Existing Town Recycling Program	3-5
	3.2.3.1 Processing and Storage Procedures	3-6
	3.2.3.2 Program Administration and Staffing	3-7
	3.2.3.3 Equipment and Storage	3-8
	3.2.3.4 Marketing	3-8
	3.2.3.5 Services Provided by Private Firms	3-9
	3.2.3.6 Funding Sources	3-9
	3.2.4 Commercial and Industrial Wastes Recycling	3-10
	3.2.5 Consent Order Decree Requirements	3-11
	3.3 Solid Waste Quantification and Characterization	3-11
	3.3.1 Present and Projected Solid Waste Quantities	3-12
	3.3.1.1 Population Projections	3-12
	3.3.1.2 North Sea Landfill Scalehouse Tonnage Records	3-13
	3.3.1.3 Projected Solid Waste Quantities	3-14
	3.3.2 Waste Stream Characterization	3-15
	3.3.3 Recyclable Materials	3-16
	3.3.3.1 Current Recycling Quantities	3-20
	3.3.3.2 Construction and Demolition Debris	3-20
	3.3.3.3 Potential Capture of Selected Source Separated Recyclable Materials	3-21

TABLE OF CONTENTS
(Continued)

		Page
3.0	DESCRIPTION OF THE PROPOSED ACTION (Cont'd)	
	3.3.4 East End Towns Waste Quantities	3-23
	3.3.5 Local Ordinances	3-24
	3.3.6 Septage	3-25
	3.3.7 Household Hazardous Waste	3-26
4.0	ENVIRONMENTAL SETTING	4-1
4.1	Topography, Soils and Geologic Features	4-1
	4.1.1 Topography and Soils	4-1
	4.1.2 Geology	4-2
4.2	Hydrogeology	4-3
4.3	Surface Water	4-6
4.4	Air Quality	4-6
4.5	Climate and Meteorology	4-8
4.6	Socio-Economic Conditions	4-8
	4.6.1 Population	4-8
	4.6.2 Housing	4-9
	4.6.3 Economics	4-9
	4.6.4 Transportation	4-9
	4.6.5 Social Services	4-10
4.7	Biological Resources	4-11
	4.7.1 Wildlife	4-11
	4.7.2 Vegetation	4-12
	4.7.3 Threatened and Endangered Species and Species of Special Concern	4-15
	4.7.4 Wetlands	4-16
	4.7.5 Significant Habitats	4-16
4.8	Cultural Resources	4-17
	4.8.1 Historic and Archaeologic Sites	4-17
	4.8.2 Parks and Recreational Areas	4-17
5.0	INTEGRATED WASTE MANAGEMENT CONCEPTS	5-1
5.1	Overview of Facility Processing Needs	5-1
5.2	Phased Sizing and Construction of Facilities	5-4
5.3	Impacts of Recycling on Mixed Waste Processing	5-6
	5.3.1 Remaining Wastes After Recycling	5-7
	5.3.2 Process Specific Impacts	5-7
	5.3.2.1 Impacts on MSW Composting	5-8
	5.3.2.2 Impacts on Waste to Energy	5-9
6.0	SOURCE SEPARATED RECYCLABLE MATERIALS PROGRAM	6-1
6.1	Introduction	6-1
6.2	Comprehensive Recycling Analysis	6-3
6.3	Implementation Options	6-4
	6.3.1 East End Towns	6-4
	6.3.2 Brookhaven Materials Recovery Facility	6-8
	6.3.3 Southampton Program	6-9
	6.3.4 Private Enterprise	6-11
	6.3.5 Other Initiatives	6-14

MALCOLM PIRNIE

TABLE OF CONTENTS
(Continued)

		Page
6.0	SOURCE SEPARATED RECYCLABLE MATERIALS PROGRAM (Cont'd)	
6.4	Waste Reduction	6-16
6.4.1	Waste Reduction Through Education	6-18
6.4.2	Waste Reduction Through Legislation	6-19
6.5	Commercial and Industrial Waste Recycling Strategies	6-19
6.6	Public Participation	6-21
6.6.1	Promotion and Education Program	6-21
6.6.2	Economic Incentives	6-23
6.6.3	Mandatory Participation Laws	6-25
6.7	Collection Systems	6-25
6.7.1	Residential Recyclables	6-26
6.7.2	Leaf and Yard Wastes Collection	6-31
6.7.3	Commercial/Institutional Materials	6-32
6.8	Materials Marketing	6-34
6.8.1	Existing Markets Survey	6-35
6.8.2	Marketing Cooperatives	6-37
6.8.3	Processing	6-38
6.8.4	Market Contracts vs. Spot Market	6-39
6.9	Recyclables Processing Technologies	6-41
6.9.1	Materials Processing Facilities	6-41
6.9.1.1	Materials Processing Equipment	6-42
6.9.2	Materials Recovery Facility Economics	6-44
6.9.3	Separated Organics Composting	6-45
6.9.4	Construction and Demolition Debris Processing	6-49
6.10	Environmental Impacts	6-51
6.10.1	Potential Environmental Impacts	6-51
6.10.2	Unavoidable Environmental Impacts	6-56
6.10.3	Irreversible and Irretrievable Commitment of Resources	6-57
6.10.4	Mitigating Measures	6-57
6.10.5	Growth Inducing Aspects	6-60
6.10.6	Use and Conservation of Energy	6-60
6.11	Procurement Practices	6-61
7.0	MIXED WASTE PROCESSING SYSTEMS	7-1
7.1	Technology Evaluation	7-1
7.1.1	Front End Processing	7-3
7.1.2	MSW Composting	7-9
7.1.3	Co-Composting	7-22
7.1.4	Waste Distillation	7-26
7.1.5	Waste-to-Energy	7-29
7.2	Environmental Impacts	7-35
7.2.1	Potential Environmental Impacts	7-37
7.2.2	Mitigation Measures	7-54
7.2.3	Unavoidable Environmental Impacts	7-56
7.2.4	Irreversible and Irretrievable Commitment of Resources	7-57

MALCOLM PIRNIE

TABLE OF CONTENTS
(Continued)

		Page
7.0	MIXED WASTE PROCESSING SYSTEMS (Cont'd)	
	7.2.5 Growth Inducing Aspects	7-57
	7.2.6 Use and Conservation of Energy	7-57
7.3	Implementation Issues	7-58
	7.3.1 Materials and Energy Markets	7-58
	7.3.1.1 Materials Markets	7-58
	7.3.1.2 Compost Market Analysis	7-58
	7.3.1.3 Energy Markets	7-68
	7.3.2 Solid Waste Stream Flow Control	7-69
	7.3.3 Procurement Methods	7-72
	7.3.3.1 Conventional Architect/Engineer	7-72
	7.3.3.2 Turnkey	7-73
	7.3.3.3 Full Service with Private Ownership	7-75
	7.3.3.4 Full Service with Public Ownership	7-76
	7.3.3.5 New York State General Municipal Law	7-77
	7.3.3.6 Summary of Facility Procurement Methods	7-77
	7.3.4 Financing and Funding Assistance	7-78
	7.3.4.1 Sources for Financing	7-78
	7.3.4.2 Review of Funding Assistance	7-82
	7.3.5 Risk Posture	7-83
	7.3.5.1 Recovered Products Risk	7-83
	7.3.5.2 Solid Waste Stream Flow Risk	7-84
	7.3.5.3 Facility Ownership	7-86
	7.3.5.4 Facility Construction Risk	7-88
	7.3.5.5 Facility Operation Risk	7-89
	7.3.5.6 Legal and Regulatory Risk	7-90
	7.3.5.7 Summary of Risk Elements	7-91
	7.3.6 Reliability and Feasibility	7-91
	7.3.7 Town Solid Waste Organization	7-95
	7.3.8 Intertown Agreements	7-95
	7.3.9 Collection System Issues	7-97
	7.3.10 Drop-Off (Transfer) Station Utilization	7-98
7.4	Summary of Candidate Options	7-99
8.0	RESIDUAL WASTE LANDFILLING	8-1
8.1	Introduction	8-1
8.2	Regulatory Framework for Landfilling on Long Island	8-1
8.3	Residual Disposal Alternatives	8-2
8.4	Residual Waste Quantities and Composition	8-4
8.5	North Sea Landfill Site Conditions	8-6
	8.5.1 Status	8-6
	8.5.2 Current Capacity	8-6
	8.5.3 Site Facilities	8-7
8.6	Potential North Sea Landfill Development	8-8
8.7	Conclusion	8-9
9.0	CANDIDATE OPTIONS ANALYSIS AND RECOMMENDATIONS	9-1
9.1	Recycling Program Recommendations	9-1

MALCOLM PIRNIE

TABLE OF CONTENTS
(Continued)

	Page
9.0 CANDIDATE OPTIONS ANALYSIS AND RECOMMENDATIONS (Cont'd)	
9.2 Mixed Waste Processing Recommendations	9-10
9.2.1 Preliminary Cost Analysis	9-11
9.2.2 Ranking of Candidate Options	9-16
9.2.3 Recommended Option	9-18
9.3 Other Means of Program Enhancement	9-20
10.0 SITE SELECTION	10-1
10.1 Introduction and Summary	10-1
10.2 Exclusionary Criteria	10-3
10.3 Identification of Candidate Site Areas	10-5
10.4 Qualitative Site Evaluation	10-7
10.5 Results and Recommendations	10-9
10.5.1 Mixed Waste Processing Facility	10-9
10.5.2 Materials Recovery Facility	10-10
10.6 Summary	10-11
11.0 IMPLEMENTATION	11-1
11.1 Recycling Program Implementation	11-1
11.2 Mixed Waste Processing Program Implementation	11-2
11.3 Regulatory Requirements	11-2
11.3.1 Federal Permits/Approvals	11-3
11.3.2 State Permits/Approvals	11-3
11.3.3 County Permits	11-5
11.4 Schedule	11-6
11.4.1 Source Separation Recycling Program Goals Schedule	11-6
REFERENCES	R-1
Appendices	
A Order on Consent File No. 1-2194	A-1
B Southampton Solid Waste Composition Analysis	B-1
C Endangered and Threatened Species and Species of Special Concern of New York State	C-1
D 1989 Recycling Plan	D-1
E Chapter 37 of the Town Code "Garbage and Waste Disposal Facilities"	E-1
F 1987 and 1988 Landfill Scalehouse Records Summary	F-1
G List of Mixed Waste Processing Vendors and Facilities	G-1
H Possible Arrangements for Processing Systems	H-1

MALCOLM PIRNIE

TABLE OF CONTENTS
(Continued)

LIST OF TABLES

Table No.	Description	Following Page
3-1	Drop-Off (Transfer) Stations	3-3
3-2	Permitted Commercial Hauling Companies	3-4
3-3	Recycling Equipment List	3-7
3-4	1989 Markets for Town Recyclables	3-8
3-5	Commercial Recycling By Private Haulers	3-10
3-6	Population Projections	3-12
3-7	1987 and 1988 Scalehouse Tonnage Estimates	3-13
3-8	Scalehouse Waste Categories	3-13
3-9	Seasonal Variations of Scalehouse Tonnage Records	3-13
3-10	Distribution of Solid Waste Among Disposal Facilities	3-14
3-11	Car Counts At Solid Waste Disposal Facilities	3-14
3-12	Estimated Future Waste Quantities	3-15
3-13	Existing Waste Composition Data	3-15
3-14	1987 and 1988 Summary of Recyclables	3-20
3-15	Construction and Demolition Debris Generation Estimates	3-20
3-16	Theoretical Waste Category Quantities	3-21
3-17	Selected Recyclable Materials	3-21
3-18	Potentially Recyclable Source Separated Materials Annual Averages - 1988 Waste Stream	3-23
3-19	East End Towns Potential Recycling Based on 1988 Quantities That Could Be Processed In A MRF	3-24
3-20	1988 Estimated Septage Quantities	on 3-25

MALCOLM PIRNIE

TABLE OF CONTENTS
(Continued)

LIST OF TABLES (cont'd)

Table No.	Description	Following Page
4-1	Federal Ambient Air Quality Standards	4-7
4-2	Significant Habitats	4-16
4-3	Historic Sites	4-17
5-1	Projected MSW Throughput	5-6
6-1	Comparison of Estimated 1988 Regional Recyclables Generation	6-5
6-2	Comparative MRF Potential Daily Tonnages	6-6
6-3	Potential E2RA MRF Through-Put Ranges to Achieve 60% Net Capture for 5 Day MRF Operation	6-7
6-4	East End Towns Estimated Separated Organics Generations	6-10
6-5	Examples of Waste Reduction Actions	6-16
6-6	Characteristics of Selected Multi-Material Drop-Off Centers in the U.S.	6-26
6-7	Leaf Collection and Composting Operation Costs for Montgomery County, Maryland	6-32
6-8	Markets For Recyclables On Long Island	6-35
7-1	Town of Southampton RFEI Vendor Response	7-2
7-2	Mechanical Equipment Used in Materials Recovery System	7-4
7-3	Properties of Mature Compost End Product	7-59
7-4	Long Island Agricultural Industry, 1988	7-60
7-5	Wholesale Costs of Compost	on p. 64
7-6	Potential Compost Markets, Non-Food Crops - Suffolk County, New York	7-65
7-7	Summary of Solid Waste Stream Flow Control Methods	7-72

MALCOLM PIRNIE

TABLE OF CONTENTS
(Continued)

LIST OF TABLES (cont'd)

Table No.	Description	Following Page
7-8	Primary Responsibilities of Involved Parties by Procurement Method	7-77
7-9	Key Criteria for Selection of Procurement Method	7-77
7-10	Key Factors for Consideration in Determining Facility Ownership	7-88
7-11	Assessment of Risk Element Allocation for a Solid Waste Disposal Facility	7-91
8-1	Probable Project Schedules for Mixed Waste Processing Facilities	8-5
8-2	Project Residuals Disposal Scenarios	8-5
8-3	Typical Leachate Quality Values	8-6
9-1	Source Separation Recycling Program Recommendations	9-1
9-2	Preliminary First Year Tipping Fee Analysis	9-15
9-3	Candidate Options Evaluation Factors	9-16
9-4	Summary Ranking of Candidate Options	9-17
11-1	Implementation Milestones	11-2
11-2	Summary of Relevant Regulatory Requirements for the Proposed Solid Waste Management Facilities	11-3
11-3	Source Separation Recycling Program Goals Schedule	11-6

LIST OF FIGURES

Figure No.	Description	Following Page
3-1	1987 and 1988 Seasonal Variations of Total Waste	3-13
3-2	Regional Map	3-23
4-1	Location Map	4-1
4-2	Geologic Cross Section	4-2

TABLE OF CONTENTS
(Continued)

LIST OF FIGURES (cont'd)

Figure No.	Description	Following Page
5-1	Annual Average Waste Stream Segments	5-2
6-1	Satellite Drop-Off Bins	6-27
6-2	Bi-Level Drop-Off Center Conceptual Design	6-27
6-3	Residential Recyclable Collection Strategy	6-29
6-4	Decline in Regular Newspaper Price January 1988 to June 1989	6-34
6-5	Recyclable Paper Processing System Flow Diagram	6-41
6-6	Metal, Glass and Plastic Containers Processing System Flow Diagram	6-41
6-7	Overall Cost Per Ton MPF Processing	6-45
7-1	Typical RDF/Compost Front End Processing Flow Diagram	7-7
7-2	Combining RDF/Compost Front End Processing with Source Separated Materials	7-7
7-3	Commercial Mixed Waste Processing Flow Diagram	7-8
7-4	Waste Distillation Process	7-27
7-5	Composting Candidate Options	7-100
7-6	Waste-to-Energy Candidate Options	7-101
7-7	Combined Candidate Option	7-102
8-1	North Sea Landfill Regional Plan	8-1
8-2	Cell 3 and Future Cells 4 and 5 Top of Liner Plan	8-8
8-3	Cells 3, 4 and 5	8-9
10-1	Hampton Bays Transfer Station	10-6
10-2	Westhampton Transfer Station	10-6
10-3	Light Industrial Site	10-6

MALCOLM PIRNIE

TABLE OF CONTENTS
(Continued)

LIST OF FIGURES (cont'd)

Figure No.	Description	Following Page
10-4	Deer Ridge Trail Site	10-6
11-1	Proposed Project Schedule	11-6

LIST OF PLATES

Plate No.	Description	
1	Site Plan	(In pocket)

PREFACE TO THE REVISED SOLID WASTE MANAGEMENT PLAN

The Town of Southampton has prepared this Revised Solid Waste Action Management Plan ("Revised SWAMP") to reflect changes in the way the Town wishes to handle its solid waste from the method described in the Original Solid Waste Action Management Plan ("Original SWAMP"). The Original SWAMP was issued on March 22, 1990, and a Findings Statement was filed, pursuant to SEQRA in August 1990. Since the filing of that Findings Statement, a number of events have caused the Town to reevaluate its previously preferred method of dealing with the mixed solid waste stream. These events are discussed throughout this Revised SWAMP. Importantly the changes represent only refinements of the originally preferred alternative. Neither the fundamental needs of the Town, nor the method for selecting a means of dealing with the Town's solid waste stream have been significantly altered. Importantly, the overall goals of the Town have remained the same, i.e., to reduce to the maximum extent possible the amount of waste requiring disposal in the North Sea Landfill.

Southampton's revised approach is actually a refinement of its initial plan. It consists of: waste reduction; mandatory source separation for both residences and commercial establishments, with continued direct marketing of such materials; composting of the source-separated organic fraction of the Town's waste stream; pre-processing of the mixed MSW for removal of recyclables and easily identifiable organics, and composting of the remaining mixed MSW during the off-peak season (i.e. fall and winter months) or when capacity is otherwise available. Only residuals will be landfilled.

The Original SWAMP proposed MSW composting of Southampton's entire waste stream after appropriate waste reduction and recycling. The experiences of other municipalities and the Town's efforts toward procuring a MSW compost facility have led to the conclusion that full-scale MSW composting is not a feasible option at this time. The preferred option, as reflected in this Revised SWAMP, is intensive source-separation of recyclable materials, selective composting of source-separated organic wastes, composting of leaf and yard waste, and when capacity is available, composting a portion of the MSW stream. Although requiring a smaller composting and waste processing facility than

originally contemplated, the Revised SWAMP will result in the diversion of substantially more of the Town's waste stream away from the North Sea Landfill.

Because the majority of the information and analysis contained in the Original SWAMP is still valid, the Town has decided not to change the actual text of the Original SWAMP. The Revised SWAMP, therefore, consists of the Original SWAMP with the addition of end-of-chapter revisions (printed on yellow paper for easier identification). The Chapter Revisions describe and set forth modifications to the chapters of the Original SWAMP and contain all the necessary details concerning the Town's proposed solid waste management strategy, as revised. The Chapter Revisions do not, however, repeat all the underlying factual bases and analyses that are contained in the Original SWAMP. Thus, readers are advised to read both the Chapter Revisions, as well as the text of the Original SWAMP.

Responses to New York State Department of Environmental Conservation Comments on the Original SWAMP are provided as Appendix I.

EXECUTIVE SUMMARY

INTRODUCTION

Like all Long Island towns, Southampton has a serious garbage disposal problem. To protect vulnerable water supply aquifers and beaches from contaminants leaching from landfills, New York State's "Long Island Landfill Law" requires that all Long Island towns phase out land disposal of raw garbage, and develop recycling and processing facilities that will provide for secure long term management of all solid wastes. The development of this program represents a major change in the way the Town must think about and deal with its trash, and will require the concerted support of everyone as these new methods are put into place.

The Town of Southampton is responsible for its own solid waste management, including planning, facilities development and operations, and is required by the State, under the Solid Waste Management Act of 1988 to develop a long term master plan to address these issues. To fulfill this responsibility, the Town has developed a Solid Waste Action Management Plan (SWAMP) as the first step in implementing a long-range solid waste management strategy. Assisted by the engineering firms of Malcolm Pirnie, Inc. and Cal Recovery Systems Inc., the Town has reviewed existing practices and evaluated alternative disposal methods, including source separation recycling strategies and mixed waste processing/volume reduction technologies. This plan is the result of those analyses, outlining an integrated waste management program that incorporates proposed actions for recycling, municipal solid waste composting and residual waste landfilling to effectively address environmental, technical and economic considerations. The North Sea Landfill site is the recommended location for composting and landfilling of process residues, and criteria for selecting alternative sites for future facilities are also outlined.

Alternatives have recently been proposed for processing wastes remaining after reduction and recycling. For example, the remaining mixed wastes could be sent to the Town of Brookhaven to be processed in that Town's composting and waste to energy facilities now being developed.

Southampton will thoroughly investigate this option and/or related regional concepts in conjunction with further consideration of an in-Town option.

THE PROCESS

Structured as a Generic Environmental Impact Statement (GEIS), the SWAMP defines program components; provides a broad overview of environmental, social and economic impacts; and identifies sites and technologies for proposed solid waste management facilities. As lead agency in developing the GEIS (because the scope of the proposed actions have primarily local impacts), the Town Board was responsible for the release of the completed draft GEIS, for public review and comment, and NYSDEC approval. This final GEIS, prepared after this review process, incorporates comments and appropriate changes. The Town will subsequently prepare and adopt a findings statement, and proceed with implementing the plan's various components. Each major action will require its own site and technology specific environmental impact statement and permit applications to the New York State Department of Environmental Conservation (NYSDEC).

EXISTING CONDITIONS

Effective planning for long-term solid waste management requires a clear understanding of existing practices and local environmental requirements and restrictions. Current waste management in the Town includes:

The North Sea Landfill: Landfilling has historically been the Towns primary waste disposal method, and in recent years this activity has been consolidated at the North Sea site on a large parcel (135 acres) of Town owned land. Up to this point, actual landfilling has taken place on about 25 acres and a new 7 acre double lined cell will provide more interim space for the next few years. However, under the Landfill Law, landfilling cannot continue beyond December 18, 1990 unless the Town has

committed to, and made substantial progress towards implementing waste processing facilities. Moreover, the Town has entered into a Consent Order with the DEC which requires, among other things, that the Town develop a mandatory recycling program and complete the SWAMP plan. It is also important to note that the life of this new cell could be extended by increasing waste reduction and recycling thereby diverting materials from disposal in the new cell.

Transfer Stations: The Town operates two drop-off stations, one in Westhampton and one in Hampton Bays, for residents who self-haul their garbage and recyclables. Approximately half the Town residents use these facilities or self-haul their wastes to the North Sea Landfill.

Collection: While there is no municipal collection, twelve private haulers held Town permits as of March, 1989, to collect residential, commercial, institutional and industrial garbage.

Recycling: In 1988, the Town's voluntary recycling program collected about 2,500 tons of materials, and about 5,000 tons of organics were received and stockpiled at the North Sea site. Some of these organics are removed and reused. This program was expanded in June to make newspaper, scrap metal and yard waste separation mandatory. Between 60 to 70 percent of construction and demolition debris (C&D) is recycled privately, and some other commercial recycling efforts are being developed.

Approximately 68,500 tons of solid waste, or 5.0 pounds/capita/day, are generated by both year round and seasonal residents. These levels are expected to rise to about 82,000 tons in the year 2000, and to 95,000 tons in 2015. Due to the influx of summer visitors, approximately twice as much waste is generated in summer months as in winter. The Town's waste stream includes significant quantities of potentially recyclable materials and it is believed that an aggressive program that will require residents and businesses to separate many items could result in a significant reduction in the tonnage that must be processed and disposed.

Environmental Setting: A comprehensive overview of Southampton topography, geology, hydrology, water quality, air quality, meteorology, socio-economic conditions, and biological and cultural resources was compiled by reviewing existing data and is included in the GEIS. This information is important to identify potential sites as well as analyze the environmental impacts of proposed actions and determine methods for mitigating any potentially negative impacts.

INTEGRATED WASTE MANAGEMENT

The hierarchy of waste management methods proposed in the New York State Solid Waste Management Plan (NYSSWMP) include: (1) waste reduction; (2) recycling and reuse, including composting; (3) waste-to-energy; and (4) landfilling. The State plan also identifies an overall goal of 50 percent reduction/reuse of solid waste and a requirement that each town must plan to recycle at least 40 percent of their total waste by 1997.

Although the State's policy prioritizes waste management methods, integration of methods appropriate for each community is the key to environmentally sound and cost effective solid waste management. While endorsing this approach and the recycling of 40 percent as a minimum goal, the Town also recognizes that successful recycling depends on numerous factors, not all under its control, and that the economics of market conditions and state or federal initiatives to promote the use of recycled materials are important. In addition, the amount of waste remaining after recycling will impact the sizing and subsequent economics of the mixed solid waste compost processing facility proposed. This factor is important in evaluating technologies and in designing a facility, and it is recognized that some degree of uncertainty is inevitable in making facility size decisions. Nevertheless, because the Town's waste stream is expected to grow considerably in the future, it is anticipated that economically sized facilities can be built, which will allow for variations in the amount of source separation that is actually achieved. Since it is not possible to process and market all of the Town's waste,

some landfilling of residual materials will be needed for the foreseeable future.

SOURCE SEPARATED RECYCLING

Source separated recycling is already under way and will be a major part of Southampton's solid waste management program, to be accomplished through a combination of regional and Town efforts. The 1989 program plan (Appendix D), required under the Consent Order, provides for mandatory source separation of newspaper, glass, metal, cardboard, yard waste, grass, miscellaneous paper products and brush by the end of this year. Cooperative efforts currently being pursued include coordination among the five East End Towns through the East End Recycling Association (E2RA) and participating in a marketing cooperative being investigated by Suffolk County Supervisors. The E2RA has initiated planning for a regional materials recovery facility (MRF) and the Town supports examining the feasibility, costs, timing and location of this project as a preferred alternative for long-term recyclables processing.

While regional approaches are being developed, the Town has implemented its own mandatory recycling program and will initiate a yard waste compost pilot program and examine various collection options. Program elements that must be addressed in detail to establish a successful recycling program include: administration, waste reduction, commercial recycling, public participation, collection, processing and marketing.

While it is recognized that the recycling program will require a commitment of some resources, it is estimated that the resulting diversion of waste from disposal can achieve a net cost savings when compared to the projected cost of processing or landfilling in subsequent years. Generally, the more source recyclables that can be removed, the less costly the facilities will be to process the remainder of the waste. Therefore, it is important to promote recycling, gain public support by providing convenient means to recycle, and provide for the infrastructure that is needed to handle and market the materials received. It is expected that the E2RA coordinator will be an important part of this

effort, and that additional support from the Town's Sanitation, Highway, and Parks and Recreation Departments will be needed.

Public participation is vital to the success of the program and will be encouraged through promotional activities and the establishment of a mandatory ordinance. The Town will also consider a pay-by-the-bag system for self haulers, as additional incentive to reduce waste and to recycle.

Collection of residential recyclables will be achieved via a combination of curbside/backyard pick-up from homes and drop-off centers for residents who self-haul their wastes. Materials separated for curbside/backyard pick-up will likely be collected unsorted in one container (commingled) for later sorting at a materials recovery facility (MRF). Recyclables brought to Town drop-off centers must be separated by the homeowner.

The Town Board required recycling of office paper at Town Hall in January, 1989. Major recyclable components of the commercial solid waste stream include corrugated cardboard, high-grade office paper and glass and metal containers from restaurants and businesses. Recycling of these commercially and institutionally generated materials will be encouraged, becoming mandatory by December, 1989.

The Town's recycling program will be impacted by its ability to market recovered materials for remanufacture. Materials sorting and processing in a MRF increases material value by removing contaminants and "packaging" for more efficient transport and handling. The need to provide a steady, large supply makes a cooperative effort more attractive, reducing susceptibility to seasonal fluctuations. The Town will therefore pursue a cooperative, regional approach for materials processing and marketing.

Composting organic materials (leaf and yard wastes, potato wastes, and manure) separated from the waste stream also reduces the amount of material sent to the landfill and produces a usable soil conditioner. The Town will initiate a separated organics pilot composting program, and will also evaluate the option of composting these materials in the proposed mixed waste composting facility.

Construction and demolition (C&D) waste is currently received, processed and mostly recycled by private firms at their facilities. It is expected that this practice can continue.

MIXED WASTE PROCESSING

Since the Town cannot continue to landfill its trash, the mixed waste (garbage) portion of the waste stream that is not source separated requires processing by a reliable system that is environmentally sound, economically feasible and compatible with the Towns recycling program. The systems evaluated included front-end processing, composting, co-composting, waste distillation, and waste-to-energy. These systems were reviewed based on the Town's waste stream characteristics, potential markets, uses for recovered materials and forms of energy, public acceptability, potential environmental impact, operating histories and costs. Available technical, environmental and financial information was used to evaluate candidate technology options, and MSW composting was selected as the preferred technology for an in-Town option. based on a ranking profile that compared conformity to the NYSDEC solid waste management hierarchy, relative costs, potential environmental impacts, and project economic risks. It is also recommended that the Town discuss sludge disposal with Riverhead and determine whether the logistics and cost of a regional MSW facility or transporting sludge to a Southampton facility for co-composting should be considered as a procurement option.

If the Town determines it to be in its best interest to proceed with a facility within the Town, the proposed solid waste composting facility would be located at the North Sea site and would be sized to handle all Town waste. It is estimated that capital costs for this facility would be about $16,000,000 to $18,000,000 in 1990 and that a bond size including all development costs would be about $22,000,000 to $25,000,000. It is possible that private sector financing can be secured for this facility. Total cost per ton of waste processed is estimated to range between $85-99 per ton when the facility is ready to operate, although this could be reduced if more materials are recycled and/or if the value of marketed compost could be increased beyond the estimated $10 per ton used for these

cost projections. Costs include provisions for landfilling all rejects, residue and non-processable materials, and are based on financing the project over a 20 year period.

It is also important to note that because solid waste (as opposed to sludge or yard waste) composting technologies are relatively undeveloped in this country at this time, the costs and contractual risks to the Town must be examined carefully during the procurement stage to assure that the project will be successful. In this regard, two significant factors contributed to the composting recommendation. They are: 1) the availability of sufficient backup landfill capacity which could be used to receive the compost in an emergency; and 2) the preliminary conclusion that Suffolk County has the potential to develop a compost market of this size, if it is aggressively pursued with a high quality product.

The recent proposal to send mixed wastes to Brookhaven will be evaluated thoroughly. Issues of costs, waste hauling, timing and residue disposal at North Sea need to be evaluated. This option will not change the basic integrated waste management system proposed in this document, but is a possible alternative for mixed waste processing.

RESIDUAL WASTE LANDFILLING

After the recyclables and mixed waste have been processed, a certain amount of residual waste will still need to be disposed of. Three residual waste disposal alternatives were considered. Off-island disposal would require truck or rail haul of residual waste out of the region at a very high cost that would likely increase with time. Disposal at another Long Island landfill is uncertain at best, and would require regional cooperation, which may not be a viable long-term solution. The North Sea Landfill site could potentially provide well over 20 years of residue landfill capacity if additional new cells are constructed as scheduled and the recycling program proceeds as planned. The estimated life of the North Sea Landfill site is based on the assumption that recycling and composting will significantly reduce the tonnage and volume of solid waste destined for landfilling since only residual, reject and bypass wastes will be landfilled. This potential long life represents a

significant and valuable resource to the Town and offers an economical and environmentally viable residual waste disposal method. Further development of the landfill will be subject to detailed environmental review and DEC approval.

New cells would be used only for process residues, rejects and bypass waste as permitted under current regulations.

SITE SELECTION

Siting of long-term solid waste management facilities is an important step in the development of the plan and must consider future as well as present needs. Although Southampton is in the fortunate position of having several previously purchased town properties available for consideration, nevertheless, this study has taken the requisite "hard look" at the entire Town to assure that facilities will be located in reasonable balance with projected needs. The siting review process systematically evaluated potential sites suited for development of a source separated recyclables materials recovery facility and a mixed waste processing facility. After initial screening which developed criteria based on zoning, planned land use, conservation areas, flood plains, agricultural soils, parks and open space and existing development, environmental, social, and economic factors were also considered in selecting potential sites.

As a result of this process, the North Sea Landfill site was selected for the mixed waste processing facility. The study concluded that three sites are potentially suitable for recyclables processing in a MRF, including the County owned site at the airport in Westhampton. A final decision on this location will be made when the regional approaches are more thoroughly considered. The study also suggested that the Town consider the future development of refuse transfer and hauler recyclables drop-off at the Hampton Bays transfer site, as a means of reducing traffic at North Sea and to provide more accessible facilities for the west end of Town.

ENVIRONMENTAL IMPACTS

Environmental impacts associated with source separated recyclable material processing and mixed waste processing are discussed in a conceptual way for all alternatives calculated. These environmental impacts included air quality, health effects, water quality, noise, odor, traffic, land use, and aesthetics. The study concluded that the composting or co-composting alternatives would likely result in lower overall environmental impact, and that mitigating measures could be included in the facilities design that would result in minimum disruption to the surrounding environment. A more detailed analysis of the environmental impacts of the selected technology at the selected site will be done in a subsequent site and technology specific environmental impact statement.

PROJECT IMPLEMENTATION

Recycling Facility

Implementation of the source separation recycling program was initiated with adoption of the 1989 Recycling Plan (see Appendix D). Expansion of these efforts towards the state goals will be initiated in 1990. However, the specific direction of recycling efforts will depend, to some degree, on the efficacy of regional cooperative efforts. This plan anticipates that more specific discussions on the definition and authority of E2RA will be completed this year, and that the feasibility, size and cost of a regional MRF could be established in early 1990. Subsequent to these activities, the site location will be finalized and an RFP procurement process will be initiated. Southampton's experience from implementing a mandatory program by the end of this year should be very valuable towards establishing phased targets for recyclables collection and more detailed information on markets. If an RFP process can be started by early next year a MRF could be on line by some time in 1992.

Mixed Waste Processing Facility

The focus of the conclusions of this report is to provide the basis for the Town to proceed with procurement of a suitable mixed waste processing option, as required by the Landfill Law.

The Town will evaluate the regional options of processing wastes in facilities such as those now being developed by the Town of Brookhaven and compare it with proceeding with its own facility. The Town will initiate procurement for its own facility. Because of the complexity and risk, it is recommended that a procurement strategy under NYS General Municipal Law 120-w (Negotiated Competitive Process) be undertaken, with the objective of selecting an experienced private vendor who will design, construct and operate the facility, and who has sufficient financial and technical backing to be able to provide suitable guarantees for the system. The request for proposals (RFP) process will review all technology options in terms of costs, risks, benefits and environmental considerations, and will emphasize the desirability of conforming to the state technology hierarchy as a priority. During RFP development, the Town may wish to approach Riverhead to determine the feasibility of co-composting with sludge, and also to consider the possibility of combining the MRF with the compost facility, to evaluate the potential for cost savings that may be possible with either of these options.

The SWAMP includes a proposed project schedule indicating the approximate expected timing of procurement, SEQR review, permitting and construction of the proposed facilities. If a draft RFP for the mixed waste facility is started early in 1990 the facility could possibly be on line by the end of 1992. The schedule for implementing an in-Town facility will be somewhat dictated by the results of the regional alternatives evaluation. Since this is about 2 years beyond the Landfill Law deadline, a DEC Commissioners review and approval certifying that the Town is making all reasonable efforts to implement the proposed facility would be required. Without this approval the Town would be required to stop landfilling in December 1990, and find another interim disposal alternative such as off-island hauling. Implementation of either an in-Town a regional alternative will be conducted within the purview of the

Long Island Landfill Law so as to prevent closure of the North Sea Landfill.

EXECUTIVE SUMMARY

BACKGROUND

The Town issued a Solid Waste Action Management Plan in March 1990 (the "Original SWAMP"), and adopted a Findings Statement pursuant to SEQRA in August 1990. The Original SWAMP provided for: (1) waste reduction and source separation educational measures; (2) mandatory source separation; (3) evaluation of developing a materials recovery facility or contributing to a regional MRF; (4) developing a mixed MSW composting facility, and (5) landfilling of waste at Cell No. 3 during implementation of its long-term plan and residual waste after implementation.

The Town proceeded with its plan, and issued a Request for Proposals ("RFP") for the design, construction and operation of a solid waste recycling and MSW composting facility. In light of the comments made on the draft RFP, and the number of recent MSW composting facility failures throughout the United States, the Town decided to re-evaluate its reliance on MSW composting as the focus of Southampton's solid waste management program. Without a reliable and proven track record for MSW composting, there was concern that despite the considerable expenditures required to construct and operate such a facility, the end-product would still need to be landfilled due to contamination and unmarketability. Because of the importance of the North Sea Landfill, and the need to reduce the quantity of materials disposed of at that site, the Town decided to examine alternative solid waste management options in the hope of refining its preferred alternative.

Based on its review of additional alternatives, as well as the State's hierarchy of waste management methods, the Town concluded that intensive source-separated recycling along with composting of the organic fraction of the Town's waste stream (i.e. leaf and yard waste, source separated food waste and soiled paper), would cost less yet be a more reliable means of reducing the total quantity of waste to be landfilled. Organics composting is a proven means of dealing with solid wastes, and yields a high quality product which is readily marketable. During the off-peak season, when and to the extent excess capacity is available, a portion of the MSW stream would also be composted.

SOURCE SEPARATED RECYCLING

Source-separated recycling has already proven to be a successful means of reducing the waste stream in the Town of Southampton. Since the Original SWAMP was issued, local laws were enacted which require mandatory source separation of newspaper, corrugated cardboard, aluminum, tin cans, glass, PET and HDPE plastics and mixed paper. In view of its recommended plans for the future, the Town has committed itself to expanding its mandatory recycling ordinance to include soiled paper, food wastes and other organic matter. This entire ordinance is applicable to commercial and industrial establishments, as well as to individual residences. Waste reduction and source separation efforts will be expanded and enforcement of mandatory programs will be increased. Details on these plans are provided in Section 6.0R.

Educational efforts have already been expanded to further promote the benefits of waste reduction and recycling in the Town. Since the Original SWAMP was issued, the East End Recycling Association subsidized by the Town of Southampton has initiated the airing of a recycling program on local cable television and published fliers on enhancing recycling and developing home composting operations.

In addition, a permanent household hazardous waste facility otherwise known as a Stop Throwing Out Pollutants ("STOP") facility, has been operating at the North Sea Landfill since June 1991. While not a recycling facility, the facility receives hazardous materials, source separated out of the waste stream, and transfers these materials, via a licensed hauler, to a proper disposal facility. As a result, household hazardous waste is removed from the waste stream prior to landfilling. Details on the STOP facility are included in Section 3.1R.

Now the Town proposes to construct a facility at the North Sea Landfill capable of handling all source-separated recyclables generated in the Town. This would include an operation for receipt and transfer of standard recyclable materials, as well as an outdoor leaf and yard waste composting facility and an indoor food and waste paper composting facility, with the capability of composting the residual MSW during the off-peak season, or as capacity permits. The proposed facility will consist of several distinct areas for processing each of the different waste types, i.e. leaf and yard waste, food and soiled paper, and recyclable materials.

Collection of these materials will be as outlined in the Original SWAMP. Source-separated organic materials will be collected in recyclable paper bags and brought to the North Sea Landfill facility by self-haulers or by private collectors where they will be removed from and processed outside of the mixed waste stream.

ORGANIC COMPOSTING AND MIXED WASTE PROCESSING

Due to the uncertainties of mixed MSW composting, the Town proposes to compost source-separated organics as its primary composting method, rather than the mixed MSW composting process outlined in the Original SWAMP. Source-separated organic composting, which the Town intended on instituting as a pilot program under the Original SWAMP, has a proven track record of reliability and success in converting municipal waste into a readily marketable, high quality end product.

Under the Town's revised program, individual residences, as well as commercial and industrial businesses, will be required to source-separate the organic portion (i.e. food waste, leaf and yard waste, soiled paper, etc.) of the waste they generate, in addition to the number of other recyclable materials as provided in the Town Code. The organic wastes will be collected along with the remaining mixed MSW and transported to a solid waste recycling and composting facility proposed to be constructed at the North Sea Landfill.

Upon arrival at the facility, the source-separated organic waste will be sent to one of two composting areas (depending on type), to be processed into high quality compost products which will be sold as a soil enhancer, and not landfilled. Leaf and yard waste will be composted at the Outdoor Leaf and Yard Waste Composting Operations Area (Outdoor Composting Area), while food waste and soiled paper will be composted indoors (Indoor Composting Area). The remaining mixed MSW will be sent to a pre-processing area on the Tipping Floor for further processing. Easily identifiable and readily extractable recyclables and organic materials will be removed manually and by front-end loader. This material will then be directed to the respective recycling or composting areas of the facility. The remaining MSW will be landfilled.

While the facility's composting areas will be sized to handle peak loads -- waste generated during the spring and summer months -- during the off-peak season, excess composting capacity will be available. During this off-peak season, or as capacity otherwise permits, the MSW ordinarily landfilled will likewise be composted. To avoid contamination,

the mixed MSW stream will be composted separately from the source-separated organics; thus, two separate compost products will be generated within the Indoor Area. If the MSW compost meets NYSDEC's criteria for Class I or Class II compost, it will be aggressively marketed. If not, the material will be sent to the North Sea Landfill for disposal. In either case, the quantity of waste destined for the landfill will be significantly reduced.

RESIDUAL WASTE LANDFILLING

After the source-separated materials have been recycled and/or composted, and the mixed waste processed, the remaining residual waste will still need to be disposed of. As described in the Original SWAMP, the North Sea Landfill is the most viable site for this residual disposal, and remains a valuable resource to the Town. Cell No. 3 of the North Sea Landfill received an operating permit in December 1989, and that permit has since been renewed on the basis that its operation results in no significant adverse environmental impacts and is in full compliance with the Long Island Landfill Law, NYSDEC's Solid Waste Regulations, and its operating permit. A petition was submitted to the NYSDEC on June 30, 1992 to renew the Town's authority to continue landfilling, as currently permitted, beyond January 1, 1993 until the implementation of the Revised SWAMP is complete. The Town expects to be granted such authority. Accordingly, the North Sea Landfill remains the most economical and environmentally acceptable means of disposing residual wastes generated in the Town.

SITE SELECTION

The North Sea Landfill, as recommended in the Original SWAMP remains the most viable site for the proposed facility.

ENVIRONMENTAL IMPACTS

Environmental impacts were conceptually evaluated in the Original SWAMP, resulting in the conclusion that composting would be more environmentally beneficial than other potential alternatives. Although the impacts of this revised plan are similar to, if not more environmentally beneficial than, those described in the Original SWAMP the Town,

as lead agency is in the process of preparing its site and technology specific impacts. Further review will occur by the New York State Department of Environmental Conservation at the time of permitting the proposed facility. To the extent new information arises, it will be evaluated at that time.

PROJECT IMPLEMENTATION

Implementation of the source separation recycling program has already been initiated. Newspapers, corrugated cardboard, PET and HDPE plastics, glass, tin and aluminum cans and mixed paper are currently recovered and recycled pursuant to a mandatory source separation ordinance enacted in 1989. Also, source-separated leaf and yard wastes are precluded from being landfilled. Food wastes, waste paper and other organic materials will be added to the list of mandatory recyclables simultaneous to start-up of the proposed facility, which is scheduled to occur in 1995.

The Town will initiate procurement of the facility to be constructed at the North Sea Landfill as soon as the Town's SWAMP is approved by the NYSDEC, currently anticipated to be later this year. In early 1993, the Town will issue draft procurement documents for the proposed facility. An experienced private vendor will be selected, through a NYSGML 120-w procurement process, to design, construct and possibly operate the various components of the selected plan. Assuming that a draft RFP for this facility is issued in early 1993, and a contract is awarded in mid-1993, the Town would expect that the proposed facility would be on-line in 1995.

4.0 ENVIRONMENTAL SETTING

The Town is a suburban community located in Suffolk County, New York. Suffolk County is located at the eastern end of Long Island and is approximately 70 miles from New York City. The Town is bordered by the Towns of Brookhaven, Riverhead and East Hampton as well as the Atlantic Ocean and the related bays, and inlets. Figure 3-2 presents a regional map of the eastern end of Long Island and Figure 4-1 is a map of the Town itself.

4.1 TOPOGRAPHY, SOILS AND GEOLOGIC FEATURES

4.1.1 Topography and Soils

Southampton is relatively flat, with elevations ranging from sea level (0 feet mean sea level [msl]) along both the northern and southern coastal areas to over 200 feet msl in the central inland portions of the Town. The highest elevation is located along the Southampton-Brookhaven border at Bald Hill, Elevation 295 feet msl.

The soils in Suffolk County have been mapped and described by the Soil Conservation Service in cooperation with Cornell University as described below.

The South Fork of Long Island eastward from Southampton to Amagansett is mantled by the Bridgehampton-Haven Soil Association. The Association occurs on the outwash plain and is characteristically level or gently sloping, with short slopes which are slightly steeper along intermittent drainage ways. Slopes range from about 1 to 6 percent in most places, increasing to about 15 percent along the drainage ways. Bridgehampton soils constitute about 35 percent of the Association and Haven Soils about 25 percent; minor soils comprise the remaining 40 percent.

The Soil Conservation Service (1975) describes the Bridgehampton soils as deep and well drained to moderately well drained. The soils are generally a silt-loam, but the surface layer and subsoil ranges from silt-loam to a very fine sandy loam. The soils are 36 to 56 inches thick, resting on glacial outwash. The Bridgehampton soils occur mainly in the southern part of the Association.

The Haven soils are described as deep and well drained with a loam surface layer and a loam or silt loam subsoil. The soil layer ranges from about 18 to 36 inches thick. The moderately sloping Haven soils commonly occur on the sides of drainage ways and on many of the broad, nearly level, gently sloping areas in the northern part of the Association.

The minor soils of the Bridgehampton-Haven Association are mapped as Carver and Plymouth soils (deep and excessively drained), Riverhead soils (well drained), Berryland soils (poorly drained), and Raynham soils (poorly drained). The Carver, Plymouth and Riverhead soils are found on the sides of some drainage ways and the Berryland and Raynham soils occur around ponds and creeks and adjacent to tidal marshes. Wooded areas adjacent to Bridgehampton soils have a soil similar to the Plymouth soil, with a silty subsoil.

4.1.2 Geology

The Town is located on the glacial outwash plain which slopes southward from the Ronkonkoma Terminal Moraine to the shore (See Figure 4-2). The Town is underlain by approximately 1,500 feet of unconsolidated Pleistocene and Cretaceous bedrock. The age of the bedrock is generally considered to range from Pre-Cambrian to Upper Paleozoic. The Cretaceous deposits, which comprise the bulk of the sediments, include several formations: the Raritan Formation; the Magothy Formation-Matawan Group, undifferentiated; and the Monmouth Group. The Cretaceous deposits are overlain by Pleistocene and recent deposits.

The bedrock has never been reached by drilling on the south fork. Information extrapolated by the U.S. Geologic Survey (USGS) from the North Fork and an area west of Shinnecock Canal, however, indicates that the bedrock is composed chiefly of gneiss and schist. The bedrock surface in Southampton is estimated to occur from 1,400 to 1,600 feet below msl. The deepest Cretaceous deposit, the Raritan Formation, is divided into the Lloyd Sand Member and an un-named clay member. The top of the Lloyd Sand Member occurs from about 1,100 to 1,200 feet below msl in Southampton and is about 200 to 300 feet thick. Based on the log of a well drilled into the top of the unit, in Southampton, the Lloyd Sand Member is characterized as a fine, light gray sand. The surface of the clay member occurs

2.0 INTRODUCTION

2.1 PROJECT SPONSOR - TOWN OF SOUTHAMPTON

The Town of Southampton (Town), acting through the Town Board, is responsible for solid waste management and facilities operation within the Town. The Town Board has retained the engineering firm of Malcolm Pirnie, Inc. in association with Cal Recovery Systems, Inc. to provide technical assistance in developing its solid waste management program and activities necessary to satisfy the requirements of the Order On Consent No. 1-2194. As part of that program, this Solid Waste Action Management Plan (SWAMP) has been developed to analyze waste processing alternatives for source-separated recyclables and for nonrecyclable mixed wastes in accordance with New York State Department of Environmental Conservation (NYSDEC) requirements, including the phased elimination of land disposal for all raw garbage, in accordance with the Long Island Landfill Law.

The development of the SWAMP is subject to New York State Environmental Quality Review Act (Article 8 of the Environmental Conservation Law and Part 617 of Chapter 6 of the New York Code of Rules and Regulations (Part 617) together referred to as the "SEQR Act", or "SEQR"). In order to oversee the development of the Plan, the Town Board has applied for (via letter to NYSDEC on January 20, 1989) and received (via letter from NYSDEC dated February 13, 1989) lead agency designation for the purpose of administering the SEQR process. Although cooperation with other East End (Long Island) Towns will likely be advantageous in certain areas (e.g., recycling), only the Town would be principally responsible for the overall scope of the proposed action (development of the solid waste action management plan), and the impacts of the plan would appear to be primarily of local significance. Other than the NYSDEC, the Town Board did not believe any other agency has the justification to fund, approve, or directly undertake the proposed action. Accordingly, the Town Board was granted lead agency status for the GEIS process.

2.2 THE GENERIC ENVIRONMENTAL IMPACT STATEMENT PLANNING PROCESS

The purpose and objective of this document is to develop basic criteria for the Town's solid waste management program; to screen alternatives; to receive public input; and to prepare a workable, environmentally sound, and feasible plan that the Town may then implement in subsequent phases of the work. The Town and Malcolm Pirnie have developed this SWAMP to meet the NYSDEC planning requirements, the requirements of the Landfill Consent Order (see Section 3.2.5, Consent Order Requirements), and the Long Island Landfill Law, as well as to address the Town's needs for long-term recycling and disposal systems. This SWAMP is presented in the form of a Draft Generic Environmental Impact Statement (GEIS) to facilitate the Town's administration of the required SEQR process.

The intent of environmental review under SEQR, is to ensure "that a suitable balance of social, economic and environmental factors be incorporated into the planning and decision making processes of State, regional and local agencies" (Part 617.1(d)). Pursuant to SEQR, all actions that may have a significant effect on the environment must include preparation of an EIS to review potential impacts associated with implementation.

The GEIS provides a means for agencies to give early consideration to environmental factors, as well as social and economic issues, by reviewing the conceptual framework of the proposed project. Additionally, it represents a means for project sponsors to systematically consider these aspects in project planning, to identify the criteria that will be utilized in selecting the site(s) and technology(ies) for the facility(ies), and to recommend site(s) and technology(ies).

As previously described, the Town Board has undertaken preparation of the SWAMP as the initial step in developing and implementing a long-term comprehensive plan for addressing the solid waste management needs of the Town of Southampton. The preparation of a GEIS to assess the environmental impacts associated with such long-term planning activities is provided for in 6 NYCRR Part 617.15. This approach necessitates the submittal and approval of the GEIS prior to proceeding with an assessment

of the site- and technology-specific environmental impacts, which will be addressed in the next step in the SEQR process (i.e., subsequent site- and technology-specific environmental impact studies). Thus, sufficient lead time is provided for agency and public review of the conceptual basis utilized in identifying a facility site(s) and technology(ies).

The SEQR process also provides for public input in the planning and decision making process after publication of this Draft GEIS plan, to ensure that the key issues in developing a specific project are addressed during the process. The public comment period may include a public hearing on the document to allow for additional public comment.

Following the close of the comment period, a Final GEIS will be prepared. The final document will address both the written comments received during the public comment period and verbal comments received at the public hearing, if such a hearing is held. The Final GEIS is then filed by the lead agency which is required to prepare a findings statement in which the agency makes findings and determinations based on the Final GEIS. The findings statement provides the basis for subsequent action by the lead agency or other involved agencies.

2.3 ORGANIZATION OF THIS DOCUMENT

This document is organized in such a way as to cover the topics required by the SEQR process. Subsequent sections of the document are divided as follows:

- Section 3.0 - Description of the Proposed Action

  This section describes the existing solid waste management system and the solid waste stream generated in the Town. The purpose and need for the proposed action (development of the SWAMP) is also included in this section.

- Section 4.0 - Environmental Setting of the Town

  The environmental setting of the Town and the constraints it places upon the solid waste management system are presented in this section. This section addresses socioeconomic conditions, cultural resources, land, air, water, and other ecological resources.

- Section 5.0 - Integrated Waste Management Concepts

  This section addresses the appropriateness of combining various solid waste management approaches to various components of the waste stream to achieve the best overall integrated solid waste management system for the Town. In addition, the NYSDEC guidelines for developing such a system in the context of requirements of the State Solid Waste Management Plan are discussed.

- Section 6.0 - Source Separated Recyclable Materials Processing Systems

  The State requires that all municipalities develop a recycling program for source-separated materials. A recycling program should sufficiently address a number of program elements to be successful. These elements include: program administration, public participation, collection, marketing and processing. This section analyzes the various options available to the Town for each of these program elements and discusses the technologies available for handling these materials and the environmental impacts and implementation issues associated with these technologies.

- Section 7.0 - Mixed Waste Processing Systems

  This section presents the various technologies available for processing the mixed waste stream after recyclables have been source-separated. The environmental impacts, implementation issues, and costs associated with developing such a system are discussed.

- Section 8.0 - Residual Waste Landfilling

  Even with the successful implementation of source-separated and mixed-waste processing systems, a landfill remains an essential component of an integrated solid waste management system for disposal of the residuals from the processing system(s). This section discusses the landfilling needs for the Town.

- Section 9.0 - Candidate Options Analysis and Recommendations

  This section includes an evaluation of the technologies selected for consideration based on the discussions presented in Sections 6.0 to 8.0. The sizes of the facilities based on the integration of the technologies are discussed, cost information is presented, and a system is recommended.

- Section 10.0 - Site Selection

  A discussion of the activities related to evaluating areas as candidate sites for the development of solid waste disposal facilities for both mixed waste processing and for source-

separated recyclables processing at a materials recovery facility (MRF) is presented here. In addition, the criteria for choosing such site(s) are developed.

- Section 11.0 - Implementation

Preparation of this document is the initial step in developing a solid waste management plan in accordance with state requirements. This section presents the additional federal, state, and local regulatory requirements and a proposed schedule for planning and implementation of a solid waste management program and sets forth a timetable for implementing the plan.

2.0R INTRODUCTION

2.1R SWAMP SEQR PROCESS AND POTENTIAL ENVIRONMENTAL IMPACTS

The Original SWAMP, which is structured as a Generic Environmental Impact Statement (GEIS) in accordance with the State Environmental Quality Review Act (SEQRA), provides a broad overview of the potential environmental, social and economic impacts, as well as the available mitigating measures, of the various solid waste management programs the Town studied. Specifically, the Original SWAMP identified and addressed the potential impacts associated with recycling and composting programs, which include: air quality, human health effects, water quality, noise, odor, traffic, land use and aesthetics. Further, the Original SWAMP identified the mitigation measures to reduce or eliminate the potential impacts.

After identifying the potential impacts of various solid waste management programs, holding public hearings and receiving comments, the Town Board concluded in the Original SWAMP that recycling and composting would result in the least overall impacts of the alternatives studied, and thus became the preferred method of solid waste management. Similarly, the Revised SWAMP concludes that intensive recycling and composting is the preferred approach to handling the Town's solid waste, but refines the technology for implementing such composting as identified in the Original SWAMP. Rather than placing sole reliance on a mixed MSW composting method, the Town proposes that intensive source-separated organic composting be instituted as the primary method of composting, with mixed MSW composting instituted during the off-peak season.

The same potential impacts associated with mixed MSW composting are likewise associated with intensive source-separated organic composting. In fact, source-separated organic composting has less overall environmental impact than mixed MSW composting. Hence, because there are no additional impacts associated with source-separated organic composting -- nor new information relating thereto -- no supplemental Final GEIS is necessary at this time. Nevertheless, the Town Board has prepared this Revised SWAMP outlining the proposed solid waste management plan as modified and will prepare a supplemental findings statement, incorporating the source-separated organic composting plan, after the public has had the opportunity to review the Revised SWAMP.

Additional information on the selection of the proposed program will be provided in the Site and Technology Selection Supplement to the Revised SWAMP/Final GEIS.

2.2R ORGANIZATION OF REVISED SWAMP

Because the text of the Original SWAMP is not being changed, the description of the information provided in each chapter of the Original SWAMP remains unchanged. The Chapter Revisions contain all the new and updated information that form the basis for the Revised SWAMP. Each revision covers only updated information, but for the same basic topics as does the chapter it revises. It is important to note that the individual sections within each Chapter Revision are not intended to correlate directly with the sections in the Original SWAMP. For example, section 3.2R in the Chapter Revision does not necessarily correlate with section 3.2 in the Original SWAMP. The general nature of the modifications contained in the Chapter Revisions are as follows:

- Section 3.0R - Waste Stream Quantification and Characterization

  This Revised Chapter describes the Town's existing solid waste management program, including additional reduction and recycling initiatives the Town has undertaken since the Original SWAMP was issued. Solid waste quantities and composition have been evaluated and revised where needed. Revised waste quantities developed in this section are used as the basis for all other subsequent Chapters Revisions.

- Section 4.0R - Environmental Setting

  This section has not been modified.

- Section 5.0R - Integrated Waste Management Concepts

  Only minor changes have been made to this section.

- Section 6.0R - Waste Reduction and Recycling Program

  This Revised Chapter describes additional waste reduction measures to be implemented in the future as well as the methodology for implementing the intensive source separation program. The materials market survey is included in this revised section. Estimated materials recovery has been projected for the 20-year planning period.

- Section 7.0R - Mixed Waste Processing Systems

  This Revised Chapter describes why the Town of Southampton has modified its approach to dealing with its solid waste stream from MSW composting, as recommended in the Original SWAMP, to increased source separation, recycling, including composting of source-separated leaf and yard waste and composting of source-separated organic materials, with a portion of the MSW composted during the off-peak season.

- Section 8.0R - Residual Waste Disposal

  This Revised Chapter reflects changes in the quantity of residual waste remaining for disposal after the recommended plan is implemented.

- Section 9.0R - Candidate Options Analysis and Recommendations

  This section has been revised to reflect the evaluation of several alternative scenarios with their concomitant costs as projected for the 20 year planning period.

- Section 10.R - Site Selection

  This section has not been modified.

- Section 11.0R - Implementation

  This entire chapter has been revised to reflect updated information as well as the new schedule for implementing the Revised SWAMP.

3.0 DESCRIPTION OF THE PROPOSED ACTION

3.1 PURPOSE AND NEED FOR THE PROPOSED ACTION

In 1988, over 68,000 tons of solid waste were disposed of at the Town's disposal facilities. By 2015, this total is expected to increase to over 95,000 tons. Except for certain commercial waste quantities (e.g., construction and demolition debris, commercial recycling, etc.), the majority of wastes generated are either disposed at the Town's North Sea Landfill or recycled. The Long Island Landfill Law requires that Long Island landfills cease accepting raw refuse by December 18, 1990, and that all waste must be processed in compliance with the requirements of Chapter 6 of the New York Code of Rules and Regulations (Part 360), with landfilling limited to residual wastes and up to 10 percent bypass waste resulting from a processing system. In addition, the Town is required under consent order with the NYSDEC to implement mandatory recycling of selected materials by December 31, 1989 (see Section 3.2.5, Consent Order Requirements).

The proposed action discussed in this document is the development of a long term solid waste management program that eventually eliminates the landfilling of raw refuse in compliance with the Long Island Landfill Law. The Solid Waste Action Management Plan (SWAMP) analyzes many issues including the mandatory recycling plan, the evaluation and selection of waste disposal technologies, identification of sites suitable for waste processing, and an implementation schedule.

In addition to actions required under the Long Island Landfill Law, the Town must address its long-term recycling and disposal needs, since its capacity to continue landfilling is limited. Even though the Landfill is not within the deep flow recharge area, it is incumbent on the Town to preserve this valuable resource by initiating steps to increase recycling and to reduce the volume being landfilled by processing the remaining fraction of the mixed waste stream as soon as possible.

3.2 EXISTING SOLID WASTE MANAGEMENT SYSTEM

The Town's existing program for handling solid waste can be categorized into waste collection, recycling and disposal methods. Solid waste collection and disposal within the Town are governed by Chapter 37 of the Town Code entitled "Garbage and Waste Disposal Facilities" (see Appendix E) and by all other applicable federal, State and local laws. The Town Code defines the Town's authority, allowable hours of operation, vehicle licensing, disposal permit requirements, recycling/source separation requirements, and fees. The Town Department of Sanitation which is headed by the Director of Sanitation consists of approximately 20 employees who work at the North Sea Landfill and transfer stations. The Department of Sanitation is responsible for the operation and maintenance of the town's disposal facilities. The following sections summarize the existing solid waste collection and disposal system and describe current recycling activities within the Town.

3.2.1 North Sea Landfill and "Transfer" Stations

The principal method employed by the Town for solid waste disposal is landfilling at the North Sea Landfill (Landfill). There are two transfer stations (resident drop-off only) used to facilitate waste collection by resident self- haulers in other locations within the Town. Self-haulers are defined herein as Town residents who bring their own garbage to a Town-operated transfer station and pay either a per visit or annual disposal fee to do so. These transfer stations are located in Westhampton and Hampton Bays. The Sag Harbor transfer station was closed on June 30, 1989. Only self-haul vehicles (no commercial haulers) are permitted to use the transfer stations. All the waste and recyclables collected at the transfer stations are subsequently delivered to the Landfill by the Town via covered transfer trailers.

The Landfill receives waste from transfer trailers, commercial vehicles, and self-haul vehicles. All commercial vehicles and transfer trailers (except the self-haul vehicles) are weighed at the scalehouse before entering the disposal area of the Landfill. For 1989, all commercial haulers are required to pay a vehicle permit fee of $250 for

the first vehicle and $100 for each additional vehicle. The 1989 permit fees for roll-off containers are as follows:

- $50 for a container less than 20 cubic yards
- $100 for a container 20 to 40 cubic yards
- $250 for a container greater than 40 cubic yards

In addition to these permit fees, the commercial haulers are required to pay a tipping fee of $20 per ton of waste in 1989. All self-haulers (including summer residents) using any of the Town disposal sites or the Landfill are required to pay $1 per visit or $20 per calendar year in 1989.

While commercial vehicles are being weighed at the scalehouse, the waste is visually characterized by the scalehouse attendant and is then disposed of in the Landfill. Since the tare weights of most commercial vehicles have been previously entered and saved in the scalehouse computer system, these vehicles are not required to weigh out after disposal in order to ease any traffic congestion.

The transfer stations are local garbage and recyclable drop-off areas for residents who are distant from the Landfill. All garbage and recyclables brought to the transfer stations are transported to the Landfill where it is landfilled or, in the case of recyclables, loaded into larger transfer vehicles for transport to a recycling market. Table 3-1 provides details on each transfer station size, quantity of mixed waste dropped off in 1988 and types of recyclables accepted. The transfer stations ranged in size from approximately 2,000 tons to over 8,000 tons of materials received in 1988. Recyclables collected include newspaper, cardboard, clean mixed paper, glass, tin cans, waste oil, leaves, chipped brush, and batteries.

The Westhampton and Hampton Bays transfer stations consist of a U shaped drive where residents proceed in one direction to reach various drop-off points. Residents first encounter the recycling center where they may drop off recyclables without paying the disposal fee. The recycling centers are followed by management stations where permits are checked or fees are collected. Residents then proceed up a ramp that brings them level with the tops of covered 65 cubic-yard transfer trailers into which the garbage is deposited. The garbage unloading ramp is

followed by stockpiles for leaves and chipped brush that are deposited by the Highway Department and self-hauling residents.

The Sag Harbor transfer station was smaller and handled less waste than the other transfer stations. Due to the small volumes and relatively high costs for upgrading to meet State standards, the Sag Harbor transfer station was closed on June 30, 1989. Instead of a dumping ramp, roll-off containers used for holding and transporting garbage to the Landfill. Recyclables were collected at Sag Harbor, but there were no stockpiles for leaves or yard wastes.

3.2.2 Collection

The Town is not responsible for collection of solid waste within the Town. Private collection services are contracted to collect approximately one-half the residential waste and nearly all of the commercial, institutional, non-hazardous industrial, and farm wastes generated. The remaining residential wastes are brought to the disposal facilities by residents themselves (self-haulers). Although there is no municipal collection of residential or commercial wastes, certain Town departments have collected leaves, roadside brush and service some of the trash containers located at parks, beaches and other public areas.

There are thirteen commercial hauling companies holding disposal permits for access to the Landfill in 1989. All permitted private collection firms were surveyed during March 1989 by Malcolm Pirnie to gather various information regarding the services they provide. Table 3-2 provides a list of the commercial haulers and indicates which type of waste generator (residential or commercial/industrial) each serves. Commercial haulers servicing residents individually contract directly with the homeowners. Approximately 10,200 homes (approximately 50 percent of all Town households) are served by these commercial haulers. About 80 percent of those households receive backyard collection service, whereas 20 percent have curbside collection. The low percentage of curbside collection is due to village ordinances prohibiting curbside collection for aesthetic reasons. All commercial haulers have provided separate voluntary newspaper collection to their customers since 1988. Some of these newspapers went to the Town's recycling center at the Landfill while

TABLE 3-1

TOWN OF SOUTHAMPTON
DROP-OFF (TRANSFER) STATIONS

Location	Site Size (Acres)	Estimated 1988 Annual Waste Quantity Received(1) (Tons)	Recyclables(2) Accepted as of June 30, 1989
Westhampton	28	3,990	N, OCC, G, T, WO, L, B
Hampton Bays	25	8,600	N, OCC, G, T, WO, L, B
Sag Harbor(3)	26	1,850	N, OCC, MP, G, T, WO, Bat

Notes:

(1) Annual waste quantity includes recyclables. Source is Landfill scalehouse records.

(2)

Symbol	Material
N	newspaper
OCC	cardboard
MP	clean mixed paper
G	glass
T	tin cans
WO	waste oil
L	leaves
B	chipped brush
Bat	batteries

(3) Sag Harbor transfer station was closed on June 30, 1989 and therefore this tonnage is expected to be directly hauled to the Landfill.

TABLE 3-2

TOWN OF SOUTHAMPTON
PERMITTED COMMERCIAL HAULING COMPANIES(1)

Company	Type of Waste Generator Serviced	
	Residential	Commercial
Atomic Carting Co.	No	Yes
Colassal Carting	Yes	Yes
Detail Carting Co.	No	Yes
George's Commercial Sanitation	No	Yes
George's Residential Sanitation	Yes	No
Jet Sanitation	Yes	Yes
Matituck Sanitation	Yes	Yes
Nickolich Sanitation	Yes	Yes
Emil Norsic & Son, Inc.	Yes	Yes
Riverhead Rubbish Removal	Yes	Yes
Riverhead Sanitation	Yes	Yes
S&P Sanitation	Yes	Yes
Suburban Sanitation	Yes	Yes

Note:
(1) This list contains commercial haulers as of June 30, 1989.

(2) Source: Malcolm Pirnie, Inc., Carters' Questionnaire, March 1989.

other newspapers were privately marketed by the commercial haulers. However, beginning June 15, 1989, separation of newspapers because mandatory for all Town residents. The Town provides a drop-off area at the Landfill for newspapers collected by the commercial haulers or delivered by self haulers.

Households not serviced by a private collection service self-haul their own garbage to one of the transfer stations or the Landfill. The Town also provides recyclable drop-off containers at these sites. These drop-off centers are open to all residents and do not require a permit for access. The centers at each disposal facility are described in greater detail in Section 3.2.1, North Sea Landfill and Transfer Stations.

Nearly all of the commercial, institutional, non-hazardous industrial, and farm wastes (potato wastes and manures) are collected by the commercial haulers. These three types of waste are delivered to the Landfill only. Several commercial haulers collect potato wastes and manures exclusively. Farm wastes and a small portion of the corrugated cardboard are collected separately and recycled through the recycling center at the Landfill or by the commercial hauler. Construction and demolition wastes are prohibited at the Landfill, and these materials are either recycled privately or disposed of in private landfills.

The Town Highway Department collects leaves and brush from residents Town-wide in the spring and fall. The Parks and Recreation Department services trash containers located at parks, beaches and public areas in the eastern half of the Town. The Town currently contracts with a commercial hauler to service park trash containers located in the western half of the Town.

3.2.3 Existing Town Recycling Program

For several years prior to 1989, the Town has conducted a successful, voluntary, source separation recycling program. In 1988, about 2,200 tons of newspaper, cardboard, glass and cans were marketed through the Town's program. In addition, an estimated 300 tons of wood chips that were made available as mulch were taken away by residents and businesses. Finally, about 5,500 tons of brush, leaves, potato wastes, landscaping wastes, sand and dirt (herein after called Separated Organics) were stock-

piled separately where it decomposes. Of this quantity, the brush and some wood chips have historically been burned on site (see Section 3.3.1.2).

In 1989, the Town began a rapid expansion of its recycling program with mandatory participation and the addition of curbside collection for residents who receive curbside garbage collection service. Appendix D to this report, "1989 Recycling Plan", describes the plan for the expansion. The following is an overview of the various elements of the Town's existing program.

3.2.3.1 Processing and Storage Procedures

The Town's source separation program provides residents with the opportunity to recycle tin cans, glass containers, newspaper, cardboard, clean mixed paper, white goods, motor oil, leaves, chipped brush and other organic wastes.

The Town receives sorted recyclables from two sources; self-haulers and private haulers. Self-haulers can drop-off their recyclables (except separated organics and scrap metals) at designated drop-off centers at the transfer stations or Landfill. Scrap metals and separated organics can be brought to the Landfill. The drop-off centers consist of a number of 20 and 30 cubic-yard roll-off containers for storing the above recyclables (excluding white goods and separated organics which are stored on the ground) and a collection tank for the waste oil.

Separated newspapers and, to a limited extent, yard wastes, white goods, and cardboard, are collected by the private carters, and are either taken to the Landfill recycling center or marketed privately. Beginning June 15, 1989, the carters have provided separate newspaper collection every other Thursday in coordination with the kick-off of the Town's new mandatory recycling program (see Section 6.3.1, Mandatory Participation Laws).

Materials collected at the transfer stations are transported to the Landfill recycling center where gross contaminants are removed upon visual inspection, and the clean recyclables are loaded into larger transfer vehicles for transport to markets. Scrap metals (i.e., white goods, metal doors, pipes, etc.) are collected only at the Landfill and are stockpiled.

Periodically, the scrap metals are sold to a private recycling firm on a spot-market basis. Grass, leaves, manures, and potato wastes are also stockpiled at the Landfill where they partially decompose. Wood chips are generated by the Highway Department when it chips brush during the spring and fall road side clean up. These chips are made available to Town residents and businesses for use as a mulch. No other processing is undertaken by the Town.

Materials that are marketed are stored on site only until enough material has accummulated to fill the container in which the material is transported to market in. This storage period ranges from approximately one week for newspaper to one month for tires and scrap metals. All materials except scrap metals and Separated Organics are stored in the drop-off center containers used by the Town (see Table 3-3, Recycling Equipment List). Scrap metals and separated organics are stored on the ground in designated areas at the landfill.

3.2.3.2 Program Administration and Staffing

Operations and administration of the Town's program is carried on by Town employees. During the expansion of the program in 1989, the Town has been assisted by the E2RA Recycling Manager and Malcolm Pirnie, Inc. Overall program management is handled by the Town Sanitation Department and a member of the Town Board.

Day to day management of operations is carried on by the Sanitation Department staff. Their activities include monitoring drop-off centers, hauling materials from the transfer stations to the landfill, loading the materials into larger transfer vehicles and then transporting the recyclables to the markets. The Sanitation Department also handles marketing of the recyclables. See Section 3.2.3.1, Processing and Storage Procedures, for more details on day to day operations.

A member of the Town Board is designated to oversee development of the program. This person serves as the contact person for program planning, the media and the public. Other activities include liason with the Sanitation Department, working with the E2RA Recycling Manager on promotional activities and development of regional initiatives. The Town

Supervisor has also been helpful; particularily with developing regional initiatives.

During the program expansion in 1989, the Town has been able to maintain program operations with existing staff. During the summer months, Sanitation Department staff have had to work over time hours on occassion to handle the larger recyclables quantities received in addition to their regular duties. This was anticipated given the seasonal variation in population in Southampton.

The Town has used the services of Malcolm Pirnie, Inc. for program expansion planning, development of promotional and educational materials and development of procurement documents for the bi-level recycling center.

Staffing needs and duties for further expansion of the program are discussed in the 1989 Recycling Plan, Section 5.0 (Appendix D of this report).

3.2.3.3 Equipment and Storage

The Town uses an assortment of roll-off containers and trailers to serve as drop-off containers and for temporary storage of recyclables. The payloaders used in landfill operations are used as needed to load recyclables brought from the transfer stations into large transfer trailers for delivery to market. Table 3-3 provides a list of equipment the Town owns and uses in its recycling program, the materials stored in each container and storage capacity. The Town currently, rents two 45 foot enclosed trailers for newspaper storage and shipment and occasionally rents larger 40 cubic yard roll-off containers as needed. An enclosed trailer is provided by Connecticut Tire Recycling for tire storage as part of its agreement with the Town.

3.2.3.4 Marketing

Materials are marketed by the Town Sanitation Department to buyers on Long Island. Table 3-4 provides a partial list of brokers the Town has sold materials to in 1989. Note that materials are sold on a "spot market basis." No marketing contracts are used. Buyers of the Town's materials can change at any time, but the Town will typically develop an

MALCOLM PIRNIE

TABLE 3-3

RECYCLING EQUIPMENT LIST
(As of 1989)

Equipment	Capacity	Number	Materials Used For	Location
Roll-Off Containers				
- 30 Cubic Yard - 20 Cubic Yard	30 cy 20 cy	8 8	Newspaper, Tin Cans, Corrugated, Glass	Landfill and Transfer Stations
Transfer Trailers(1)	65 cy (approx)	9	Newspaper, Tin Cans, Corrugated	Landfill
Mack Tractors(1)	NA	2	Newspaper, Tin Cans, Corrugated, Glass	Varies
Pay Loaders(1)	NA	2	Newspaper, Separated Organics	Landfill
Hoist Truck (for Roll-offs)	NA	1	Newspaper, Corrugated, Tin Cans, Glass	Varies
Oil Containers		3	Motor Oil	Landfill and Transfer Stations
Rental Equipment				
Enclosed Trailers	50-65	3	Newspaper, Tires	Landfill
Roll-Offs	40	1-4	Glass, Tin Cans	Landfill

Notes:

(1) Equipment also used for handling waste.

TABLE 3-4

1989 MARKETS FOR
TOWN RECYCLABLES

Material	Market
Newspaper	Pinnacle Industries Jet Sanitation Island Recycling
Corrugated Cardboard	Jet Sanitation
Tin Cans	Jet Sanitation
Glass	EWG Glass Recovery Gershow Recycling Jet Sanitation
Scrap Metal	Gershow Recycling
Tires	Connecticut Tire Recycling
Wood Chips	Town Residents

informal understanding with individual buyers to work with them on a continuing basis. This arrangement adds a degree of stability to the Town's marketing efforts.

3.2.3.5 Services Provided by Private Firms

Private entreprise play important roles in the areas of collection and marketing of materials.

The Town and Malcolm Pirnie have held several meetings with the private haulers. These meetings have been instrumental to developing the 1989 Recycling Plan. Together, the Town and haulers developed collection schedules, sorting instructions and generally have coordinated activities. The result is an efficient curbside collection program operated by the private haulers that required no additional expenditure by the Town and no increase in collection service fees to residents.

Recyclables collected are either brought to the drop-off center at the landfill or, depending on market conditions, are sometimes sold directly to markets by the hauler.

The haulers have also helped publicize the recycling program by mailing promotional materials developed by the Town to their customers with their regular invoices. The haulers have also provided recycling services to their commercial customers as well. Section 3.2.4, Commercial and Industrial Recycling provides an overview of these activities.

Numerous scrap brokers and processors located on Long Island, have served as markets for the source separated materials collected in the Town's program. Section 3.2.3.4, Marketing, for more details.

3.2.3.6 Funding Sources

Funding for the existing recycling program and the 1989 expansion activities is derived from several sources. Day to day operating costs are included as part of the Sanitation Department budget. Program planning and promotion and education costs have been funded through the Town's general operating budget. The Town issued a $10 million bond to fund capital expenditures for solid waste management facilities at the North Sea Landfill. A portion of this money will fund construction of the bi-level recycling center.

3.2.4 Commercial and Industrial Wastes Recycling

Commercial and "Industrial" wastes are generated in Southampton by construction, farming, retail businesses and offices. Farm wastes are handled as Separated Organics by the Town and are stockpiled as described in Section 3.2.3.1, Existing Town Recyling Program. Commercial wastes in Southampton are generated by offices, department stores, restaurants, supermarkets and other retail establishments. Recyclable materials are generated in relatively homogeneous streams at each commercial establishment.

The private haulers operating in Southampton were surveyed in March 1989 and were asked if they collected any commercially generated materials for recycling privately. At that time, three haulers collected separated recyclables from commercial establishments (see Table 3-5). All three collected separated corrugated cardboard, and one hauler, Jet Sanitation, also recycled "mixed commercial wastes." The haulers indicated that commercial materials are recycled intermittently depending on market conditions or at the request of the commercial client. Quantities are not estimated due to the inconsistent nature of these recycling activities. The corrugated cardboard is marketed on a spot market basis to various unidentified buyers.

Waste paper brokers surveyed by Malcolm Pirnie as part of the Markets Survey (see Section 6.8 of this report) were asked if they pick-up any high-grade paper directly in Southampton. None indicated that they did.

Landfill disposal of construction and demolition waste (C&D) at the North Sea Landfill has been banned since 1986. George's Sanitation operates a permitted C&D processing facility in Quogue. This facility reportedly accepts between 200 and 600 cubic yards per day (varies seasonally) of C&D debris from private haulers and construction contractors. The materials are sorted in a 13,000 square foot building. Mixed plastics and cardboard are baled; lumber, brush and stumps are chipped; concrete and asphalt rubble are crushed to produce aggregate; and metals are separated. Recyclable materials are marketed on a spot-market basis. George's Sanitation must pay to have some materials, such as wood chips and the mixed plastics, taken to recycling markets. Typically, about 50

to 60 cubic yards a day of non-recyclables remain after processing and are disposed of in a permitted C&D landfill in Farmingdale, NY.

3.2.5 Consent Order Decree Requirements

The NYSDEC issued Order on Consent File No. 1-2194 signed by the Town on February 8, 1989 (Consent Order). This Consent Order requires that the Town undertake several actions including development and implementation of a plan for the mandatory recycling of newspaper, cardboard, glass, yard waste, grass, metal, miscellaneous paper products, and brush.

In addition, Cell No. 2 of the existing Landfill must be closed by October 1, 1989 and capped in accordance with an approved plan for final closure of the cell. The new Cell No. 3, currently under construction, will become operational on October 1, 1989. The Town must install an approved methane gas collection system for Cells No. 1 and No. 2. The Consent Order also includes provisions for monitoring leachate, investigating/remediating Cell No. 2, and establishing an ongoing program for cleaning up all litter and debris which has blown from Cell No. 2. The Town is also required to develop and implement a work plan for cleanup of the old sludge lagoons at the Landfill and will also submit a conceptual design for a proposed temporary transfer station in the event that off-Island trucking should become necessary, in accordance with the Consent Order.

Should the requirements described above not be accomplished in adherence with the terms and conditions of the Consent Order, a penalty of $200,000 could become due. To date the Town has met all requirements as scheduled in the Consent Order and the NYSDEC has also postponed certain deadlines due to conflicts with EPA actions.

3.3 SOLID WASTE QUANTIFICATION AND CHARACTERIZATION

Estimates of solid waste quantities are essential in planning for proper solid waste management. Solid waste quantities and characteristics influence what disposal technologies may be feasible and possibly the extent of processing required. Variables ranging from commercial development and population changes to recycling and seasonal activity can

contribute to fluctuations in the waste stream both annually and over the long term.

The estimates prepared in the following sections were based primarily on previous reports, studies and data compiled from the North Sea Landfill scalehouse tonnage records but were adjusted in certain areas and broken down further by estimating the likely presence of recyclable materials. This waste quantity data will be used to perform technology evaluations, although it is noted that it may not be sufficiently accurate with respect to recycling and composting potential.

3.3.1 Present and Projected Solid Waste Quantities

3.3.1.1 Population Projections

The Town population consists of year-round residents, summer residents and weekend and holiday visitors, which cause the yearly population to fluctuate dramatically. Because of this dynamic fluctuation, seasonal and seasonal peak data need to be examined along with the year-round population data. Population projections were reviewed for the planning period through the year 2015. Sources of information include Long Island Lighting Company data (LILCO, 1987) and the Town Master Plan Update (Southampton, 1983). This data is presented in Table 3-6 and include year-round population, seasonal residents, and seasonal peak visitors (i.e., those people who visit the Town on weekends and holidays). In order to more accurately calculate future waste projections due to the extreme seasonal waste stream fluctuations, a weighted population was estimated. As noted in Table 3-6, the weighted population was calculated by assuming that one month consists of the seasonal peak population, five months consist of the seasonal population, and the remaining six months of the year consist of the year-round population.

It is anticipated that the Town's year-round and summer peak populations will continue to increase through the year 2015 and likely beyond. The summer peaks include peak summer weeks near the July 4 and Labor Day holidays. From 1988 to 2010, the year-round and summer peak populations are projected to increase from 50,015 to 64,000 and 126,015 to 152,800, respectively. The weighted population is estimated to be approximately

TABLE 3-11

TOWN OF SOUTHAMPTON
CAR COUNTS AT SOLID WASTE DISPOSAL FACILITIES[1]

Disposal Location	Number of Self-Haul Vehicles During Weeks of								
	2/7/88-2/13/88	4/10/88-4/16/88	6/05/88-6/11/88	6/26/88-7/02/88	7/03/88-7/09/88	8/28/88-9/03/88	9/04/88-9/10/88	10/16/88-10/22/88	12/04/88-12/10/88
Sag Harbor[2]	1110	923	1230	1535	1925	1977	2126	1800	1289
(% of Week Total)	12%	7%	8%	8%	10%	11%	12%	14%	12%
Hampton Bays	3511	5353	5747	6554	7429	6933	6548	4481	3800
(% of Week Total)	37%	41%	36%	33%	37%	40%	38%	34%	36%
Westhampton	1796	2457	2685	2919	3331	3168	2999	2463	2094
(% of Week Total)	19%	19%	17%	15%	17%	18%	17%	19%	20%
Landfill	3056	4298	6220	9018	7191	5373	5704	4452	3362
(% of Week Total)	32%	33%	39%	45%	36%	31%	33%	34%	32%
WEEK TOTAL	9473	13030	15882	20026	19876	17451	17377	13196	10545

NOTES:
(1) Source: Town Landfill scalehouse records.
(2) Sag Harbor transfer station was closed on June 30, 1989.

TABLE 3-10

TOWN OF SOUTHAMPTON
DISTRIBUTION OF SOLID WASTE AMONG DISPOSAL FACILITIES

	Tons Delivered During Weeks of								
Disposal Location	2/7/88-2/13/88	4/10/88-4/16/88	6/5/88-6/11/88	6/26/88-7/2/88	7/3/88-7/9/88	8/28/88-9/3/88	9/4/88-9/10/88	10/16/88-10/22/88	12/4/88-12/10/88
Sag Harbor (2)	0.0	0.0	0.0	0.0	0.0	4.3	5.5	36.5	31.7
(% of Week Total)	0%	0%	0%	0%	0%	0%	0%	3%	3%
Hampton Bays	79.0	112.7	176.8	194.8	225.9	185.2	201.7	137.5	126.7
(% of Week Total)	9%	10%	13%	12%	14%	12%	13%	3%	14%
Westhampton	63.4	95.6	96.6	130.0	99.3	110.9	82.6	33.5	51.3
(% of Week Total)	7%	8%	7%	8%	6%	7%	5%	7%	6%
Landfill	722.3	936.9	1055.7	1261.4	1262.6	1302.0	1240.8	848.4	709.0
(% of Week Total)	84%	82%	79%	80%	80%	81%	81%	77%	77%
WEEK TOTAL	864.7	1145.2	1329.1	1586.1	1587.8	1602.4	1530.6	1095.9	918.8

NOTES:

(1) Source: Town Landfill scalehouse records.

(2) Waste disposal at the Sag Harbor transfer station was not recorded at the Landfill until September 1988. Sag Harbor transfer station was closed on June 30, 1989.

93,400 by the year 2015. It is noted that the Town population approximately doubles every year during the warm weather months and experiences almost another 25 percent increase during the summer peak weeks.

3.3.1.2 North Sea Landfill Scalehouse Tonnage Records

As previously discussed, the Town weighs all solid waste disposed of at the North Sea Landfill with the exception of self-hauled waste (i.e., delivered by residents). Summaries of actual Landfill scalehouse tonnages for 1987 and 1988 are presented in Table 3-7. Based on this data, the annual average weighed tons per day (tpd) of waste being disposed at the Landfill and transfer stations during 1987 and 1988 was approximately 168 tpd including all marketed recyclables. Although the waste being disposed at the transfer stations is not weighed, the transfer trailers and containers from each transfer station are weighed at the Landfill scalehouse before disposing of the transfer station waste at the Landfill site. Therefore, the waste disposed at each transfer station is indirectly weighed and recorded at the scalehouse.

However, since the scalehouse records do not include the quantities of waste delivered to the Landfill via self-haul vehicles, this quantity of self-hauled waste was estimated. The weighted tons and estimated non-weighed tons were added to provide the Estimated Total Tons as presented in Table 3-7. Based on the assumptions noted in Table 3-4, the Estimated Total Tons of waste disposed at the Landfill in 1987 and 1988 were approximately 188 tpd in both years.

At present, there are 14 waste categories used by the Town for classifying incoming solid waste and marketed recyclables. Table 3-8 is a list of these categories. These categories are quantified and summarized for 1987 and 1988 in Appendix F.

Table 3-9 summarizes the seasonal variation of the Town's solid waste stream. The months of December through March are the least active months while April through September are the peak months. Figure 3-1 plots the seasonal activity for 1987 and 1988 and the waste stream annual average (188 tpd), which illustrates the Town's current seasonal waste stream fluctuation. Note that the seasonal variations may exceed 188 tpd by approximately 40 percent. Due to this seasonality of the waste stream,

the following analyses regarding disposal distributions and car counts were based on various weeks throughout the year to account for any waste stream fluctuations. A few seasonal peak weeks (i.e., weeks including July 4 and Labor Day) were also selected to see what effects these peaks would have on the analysis.

As previously stated, the majority of the Town's solid waste is delivered to the Landfill by private carters and self-hauling residents. The waste disposal distribution among the Landfill and the transfer stations for various weeks of 1988 is indicated in Table 3-10. Approximately 80 percent of the waste stream was delivered directly to the Landfill while 10 percent was delivered to Hampton Bays and the remaining 10 percent was delivered to Westhampton prior to subsequent landfill disposal.

Although the quantity of waste delivered to the Landfill and transfer stations by self-haul vehicles is small compared to the amount of waste disposed by private carting trucks, the number of self-haul vehicles disposing of waste each day is variable and can be extremely large. The number of self-haul vehicles (car count) disposing of waste at the various disposal sites during various weeks in 1988 is shown in Table 3-11. The Hampton Bays transfer station and the Landfill received the majority (approximately 60 to 70 percent) of all self-haul vehicles. Similar to the waste generation trend, the number of self-haul vehicles entering the Landfill and transfer stations increased during the warm weather months and peaked during the weeks of July 4 and Labor Day. The car counts during the winter months fell to the minimum for the year. Peak car counts during the week before July 4, 1988 were as high as 6,550 cars entering the Hampton Bays transfer station and 9,000 cars entering the Landfill.

3.3.1.3 Projected Solid Waste Quantities

In order to project future solid waste quantities, historical unit waste generation rates and population projections were used. These were cross-checked using typical national and regional waste generation rates. As previously mentioned, by 2015 the Town population (both year-round and summer peak) is expected to increase to about 64,000 and 152,800, respec-

TABLE 3-5

COMMERCIAL RECYCLING
BY PRIVATE CARTERS

Hauler	Materials	Where Processed or Accumulated
George's Sanitation	Corrugated Cardboard	Quogue
Jet Sanitation	Corrugated Cardboard and Mixed Commercial	Central Islip
Riverhead Sanitation	Baled Corrugated Cardboard	Riverhead

MALCOLM PIRNIE

TABLE 3-6

TOWN OF SOUTHAMPTON
POPULATION PROJECTIONS

Description	1988	1990	1995	2000	2005	2010	2015 (7)
Year-Round Population (1)	50,015	52,000	53,250	54,750	57,750	60,750	63,750
Seasonal Residents (2)	48,000	48,000	50,400	51,840	52,800	52,800	52,800
Seasonal Population (3)	98,015	100,000	103,650	106,590	110,550	113,550	116,550
Seasonal Peak Visitors (4)	28,000	28,500	30,000	31,700	33,000	35,000	37,000
Summer Peak Population (5)	126,015	128,500	133,650	138,290	143,550	148,550	153,550
Weighted Population (6)	76,350	78,410	80,960	83,310	86,900	90,070	93,200

Note: (1) Year-round population includes those people who live in the Town 12 months of the year. Source: LILCO, Revised May 1987.

(2) Seasonal residents include those people who live in the Town during the six warm months of the year (April through September). Source for calculation method is Town of Southampton Master Plan Update Report #2, October 1983.

(3) Seasonal population includes year-round population and seasonal residents.

(4) The seasonal peak visitors include those people who visit the Town on weekends and holidays including Fourth of July and Labor Day weekend.

(5) The summer peak population is the cummulative population of the year-round population, seasonal residents, and seasonal peak visitors.

(6) The weighted population is based on a year-round population, a five-month warm weather season, and a one-month summer peak season. Therefore, the weighted population equals 6/12 (year-round population) + 5/12 (seasonal population) + 1/12 (summer peak population).

(7) Projections for year 2015 are based on extrapolating the projected population from 2005 to 2010.

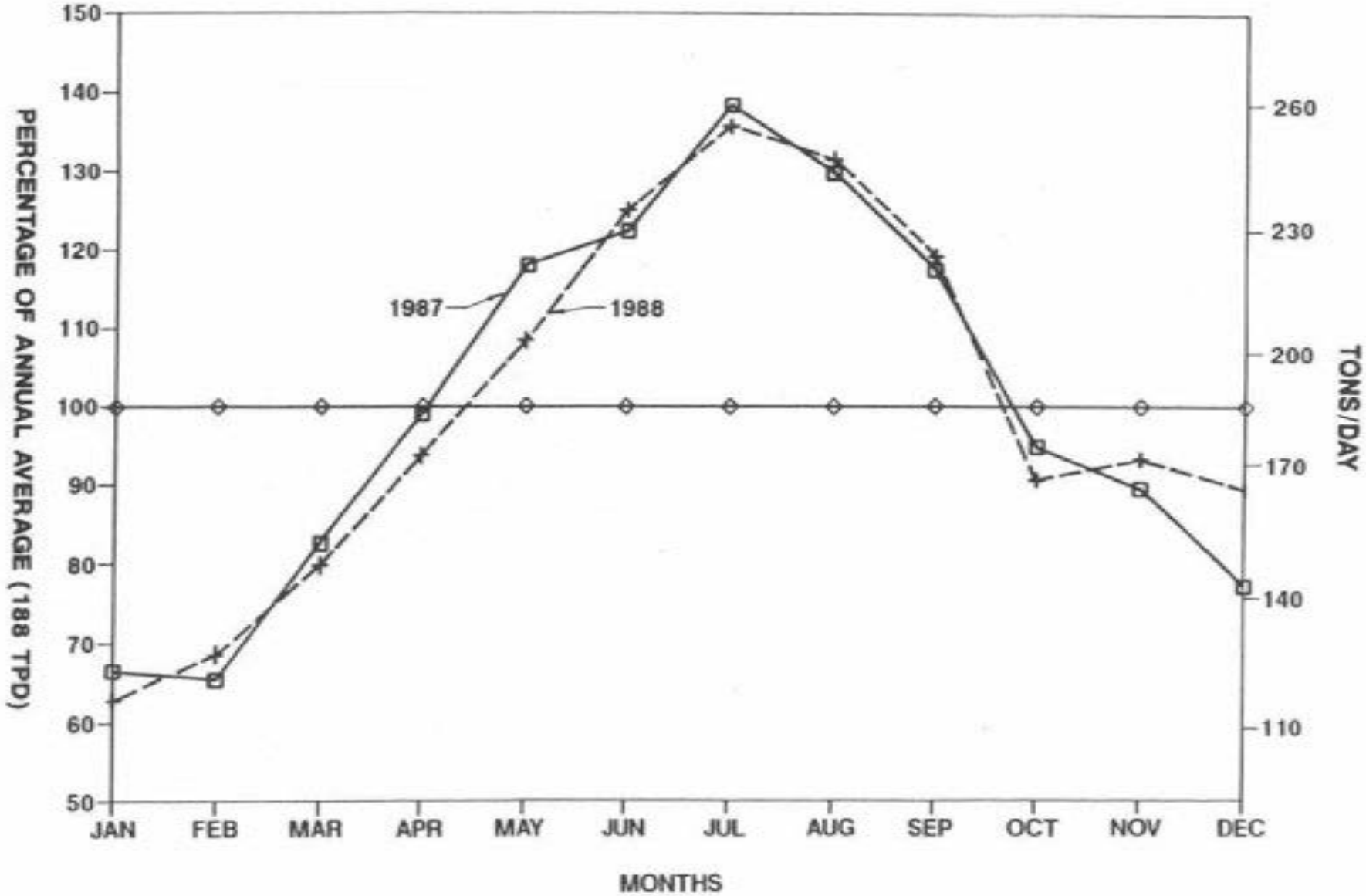

TOWN OF SOUTHAMPTON
SOLID WASTE ACTION MANAGEMENT PLAN

1987 AND 1988
SEASONAL VARIATIONS OF
TOTAL WASTE

MALCOLM

FIGURE 3-1

MALCOLM PIRNIE

TABLE 1-7

TOWN OF SOUTHAMPTON
1987 AND 1988 SCALEHOUSE TONNAGE ESTIMATES

	1987		1988	
Month	Weighed Tons Only(1)	Estimated Total Tons(2)	Weighed Tons Only(1)	Estimated Total Tons(2)
January	3,384	3,882	3,157	3,664
February	3,031	3,438	3,313	3,739
March	4,264	4,806	4,132	4,638
April	4,940	5,572	4,346	5,266
May	6,131	6,869	5,650	6,322
June	6,227	6,897	6,315	7,059
July	7,221	8,046	6,950	7,894
August	6,782	7,578	6,792	7,654
September	6,043	6,636	6,027	6,725
October	4,895	5,518	4,535	5,267
November	4,544	5,046	4,721	5,243
December	3,999	4,502	3,950	5,032
TOTAL	61,461	68,790	59,888	68,505
Average TPD(3)	168	188	164	188

Note: (1) Source is North Sea Landfill scalehouse records.
(2) Since the number of self-haul vehicles entering both the North Sea Landfill and Hampton Bays transfer station is approximately the same, based on car counts, the quantity of self-hauled waste disposed at the Landfill is assumed to equal the amount of waste delivered to Hampton Bays transfer station or approximately 20 to 24 tons per day.
Therefore, the Estimated Total Tons is the sum of recorded North Sea scalehouse tons plus the tons of waste delivered to Hampton Bays transfer station.
(3) Based on 365 days/year.

TABLE 3-8[1]

TOWN OF SOUTHAMPTON
SCALEHOUSE WASTE CATEGORIES

1.	Brush	8.	Tires
2.	Garbage	9.	Landscaping
3.	Miscellaneous	10.	Dirt
4.	Wood Chips	11.	White Goods Out (sold to market)
5.	Sand	12.	Cardboard Out (sold to market)
6.	Leaves	13.	Newspaper Out (sold to market)
7.	Potatoes	14.	Glass Out (sold to market)

Notes: (1) As classified by the Town for incoming solid waste marketed recyclables before June 30, 1989.

MALCOLM PIRNIE

TABLE 3-9

TOWN OF SOUTHAMPTON
SEASONAL VARIATIONS OF SCALEHOUSE TONNAGE RECORDS

	1987		1988	
Month	TPD (1)	Percent of Average TPD	TPD (1)	Percent of Average TPD
January	125	66	118	63
February	123	65	129	69
March	155	82	150	80
April	186	99	176	94
May	222	118	204	109
June	230	122	235	125
July	260	138	255	136
August	244	130	247	131
September	221	118	224	119
October	178	95	170	90
November	168	89	175	93
December	145	77	168	89
Average TPD	188		188	

Notes: (1) Based on Town Landfill scalehouse records and estimated self-haul waste delivered to the Landfill.

tively. The weighted population is expected to increase by approximately 600 people per year through 2015. Records from 1987 and 1988 indicate a total waste generation rate of 4.9 lb/capita/day based on an average total tonnage of 188 tpd and a weighted population of 76,350. Comparing this approximated waste generation rate to other Long Island towns, this figure seems slightly low, even if it is discounted for the removal of C&D waste. We therefore believe it is reasonable to use a figure of 5.2 lbs/capita-/day, which may increase somewhat in the future because of projected increases in packaging materials (The NYS Solid Waste Management Plan, DEC 3/31/87). Some other Long Island towns now have a waste generation rate that exceeds 6.0 lb/ capita/day. Table 3-12 summarizes the projected estimates for future solid waste quantities using the weighted population data in Table 3-6. The Town's waste stream is expected to increase by about 84,000 tons per year through 2015.

3.3.2 Waste Stream Characterization

The solid waste weighed at the scalehouse in 1987 and 1988 represents the best available data on refuse categories within the Town of Southampton. Additionally, in 1986 the Town commissioned a waste sampling program by Holzmacher, McLendon and Murrell, Inc. (H2M) that provided compositions of specific materials. Four separate (weekly) sampling studies were undertaken in June, July, October and December 1986. Because this data is not sufficiently detailed with respect to breakdown of many potentially recyclable items, the available data on Southampton's waste stream was complemented with selected national data to provide further detailed analysis pertaining especially to subcategories (recyclables) as discussed in Appendix B, Southampton Solid Waste Composition Analysis.

Table 3-13 presents the Town's waste composition based on Landfill records (Column A), the H2M waste composition study (Column B), and a combination of these two data bases (Column C). The Landfill data column represents visually characterized loads of the materials delivered to the Landfill during 1987 and 1988 as previously discussed in Section 3.3.1.2, North Sea Landfill Scalehouse Tonnage Records. The waste composition study data column is an average of the four Town studies based on the sampling of the mixed waste fraction which comprised 86.7 percent of the

total waste stream. The combined data was developed from the combination of the Landfill records and composition study.

In order to provide further analysis, information from waste composition studies in Long Island and other locations was evaluated relative to the Town. Due to the abnormal values of several components such as glass and paper in the Town's data as compared to data from these other local and national composition studies, an adjusted waste composition for the Town was estimated, as reflected in Column D of Table 3-13. In order to complete the missing subcategories in Column C, values from other waste composition field studies for similar waste streams were utilized. Values for paper and glass in the adjusted waste composition were determined by averaging values from the other composition studies with those of the Town. Values for the remaining categories were proportionally adjusted to reflect these changes.

As previously mentioned, the Town's earlier waste composition studies did not include a breakdown of recyclable materials and may need to be updated to better estimate the recyclable fraction of the Town's waste stream.

3.3.3 Recyclable Materials

There is a variety of materials that could be salvaged from the wastes currently being discarded in the Town. Secondary materials markets throughout the County have existed for decades for paperstock, various metals, glass and other materials. Relatively new markets have been established for other secondary materials, such as several plastic polymer types. These markets capture much of the scrap material generated by industrial and commercial operations. Many of the items present in the municipal solid waste (MSW) stream are similar in character to those being diverted into secondary materials markets, but are not diverted for reasons of economics.

In order to sell materials in existing secondary materials markets, materials must be processed to meet buyers' specifications. The purpose of this section is to identify the materials present in the Town's waste stream that could potentially be collected and prepared for existing secondary materials markets. Additional information on the location and

MALCOLM PIRNIE

TABLE 3-12

TOWN OF SOUTHAMPTON
ESTIMATED FUTURE WASTE QUANTITIES

Description	1988	1990	1995	2000	2005	2010	2015
Weighted Population	76,350	78,410	80,960	83,310	86,900	90,070	93,200
Per Capita Generation Rate(1) (lbs/capita/day)	4.9	5.2	5.3	5.4	5.5	5.6	5.7
Waste Generation (tons/year)	68,500	74,400	78,300	82,100	87,200	92,100	96,900
(TPD)(2)	188	204	215	225	239	252	265

Note: (1) Based on the "Characterization of Municipal Solid Waste in the United States", Franklin Associates, Ltd. (July 11, 1986) there will be approximately a 0.34 percent annual rate of increase of the per capita generation rates for the years 1995 through 2015.

(2) Based on 365 days/year.

MALCOLM PIRNIE

TABLE 3-13

TOWN OF SOUTHAMPTON
EXISTING WASTE COMPOSITION DATA

Component	Column A Landfill Data (Percent)	Column B Composition Study Data (Percent)	Column C Combined Data (Percent)	Column D Adjusted Data (Percent)	Column E Adjusted Average (tpd)
Paper	1.2	38.2	34.3	42.2	79.3
OCC/Kraft	0.5	11.6	10.5	15.6	29.3
Newspaper	0.7			5.9	11.1
High Grade (Office)				5.1	9.6
Magazines				3.0	5.6
Mixed Paper (Low Grade) (1)				4.2	7.9
Other Paper (Contaminated) (2)				8.4	15.8
Plastic		8.6	7.5	6.2	11.7
Film				2.0	3.8
HDPE				0.7	1.3
PET				0.1	0.2
Polystyrene				0.1	0.2
Other Plastic				3.3	6.2
Yard Waste	7.7	11.8	17.9	14.9	28.0
Wood	1.1	4.0	4.6	3.8	7.1
Food	0.3	10.9	9.8	8.2	15.4
Textiles		3.2	2.8	2.3	4.3
Other Organics				4.3	8.1
Metals		9.1	7.9	6.5	12.4
Steel Cans				3.2	6.0
Bimetal Cans				0.7	1.3
Aluminum Cans				0.9	1.7
Other Aluminum				0.4	0.8
Other Metals				1.3	2.4
Glass	0.1	14.0	12.2	8.6	16.4
Clear				3.8	7.1
Brown				0.8	1.5
Green				2.4	4.5
Other				1.6	3.0
Soil	1.6		1.6	1.6	3.0
Other Inorganics		0.2	0.2	0.3	0.6
Bulky Items	1.1		1.1	1.1	2.1
Tires	0.2		0.2	0.2	0.4
Mixed Waste	86.7				
TOTAL	100.0	100.0	100.0	100.0	188.0

Notes: (1) Mixed paper includes low grade recyclable paper such as household papers and envelopes.

(2) Other paper includes low grade contaminated paper such as used tissues, paper towels and napkins. Other paper is not recyclable.

(3) Column A is based on visually characterized incoming solid waste and recyclables. Source is Town Landfill scalehouse data.

(4) Column B is based on H2M waste composition study in 1986.

(5) Column C was calculated by multiplying 86.7% times each component composition in Column B and adding the resulting product to the respective component composition in Column A.

(6) Column D is an adjustment of Column C based on other waste composition studies and other municipal waste stream (see Appendix B).

(7) Column E is the annual average tons per day based on the adjusted data in Column D and the daily annual average of 188 tpd.

current receiving practices of a variety of Long Island firms who are currently accepting recyclable materials is in Appendix D, 1989 Recycling Plan.

Paper

Paper is the largest component (approximately 40 percent by weight) of the Town's municipal waste. Paper is produced for printing and writing purposes, packaging, construction products, and for inclusion in durable goods, such as shoes, autos, and appliances.

Recovery of waste or scrap paper has been a major source of raw material for the paper and paperboard industry in the U.S. for many decades. The paper categories most commonly source separated or recovered from the mixed MSW stream are the following:

- newspaper
- corrugated
- high-grade (primarily ledger and computer paper)
- mixed-grade (low grade recyclable paper)

Based on the adjusted waste stream data in Table 3-13, corrugated paper accounts for approximately 15 percent of the entire waste stream and other recyclable paper types comprise about 18 percent. The estimated newspaper fraction is expected to be approximately 6 percent.

Plastic

Plastics account for approximately 6 percent of the Town's waste stream according to the adjusted composition data in Table 3-13. Plastics of many types are used as materials for packaging, construction products, and durable and non-durable goods. Recovery and recycling is a common occurrence within plastic product manufacturing plants. However, this is commonly done with clean, uncontaminated scrap of known composition. Recovery and recycling of plastics from the MSW stream is problematic because of the heterogeneous assemblage of polymer types present in MSW. Moreover, a growing number of plastic products are made of several types of plastic laminated together or rigidly affixed.

Secondary materials markets have recently been developed for several specific plastic polymer types that are commonly used in packaging and subsequently discarded in the solid waste stream. These polymers include high-density polyethylene (HDPE) and polyethylene terephthalate (PET).

Specifically, secondary markets exist for post- consumer PET bottles (primarily used as packaging for soft drinks) and HDPE bottles (primarily used for packaging milk, motor oil, bleach, and other liquids). The proportion of HDPE and PET plastics in the Town's waste stream that would satisfy the specifications of existing secondary materials markets is estimated to be approximately 2 and 1 percent, respectively.

The recycling of other plastic polymers and even mixed plastic polymers from the waste stream has developed recently in various locations in the U.S., including some emerging markets on Long Island. Depending upon the success of market development efforts for other plastic items, secondary markets may develop for a larger portion of the plastic waste stream.

Ferrous Metals

Ferrous metals (i.e., steel cans and other metals) accounted for approximately 2 percent of the Town's waste stream according to the adjusted composition data. Iron and steel scrap from commercial and industrial sources are commonly recycled and are responsible for a significant portion of total ferrous input to the U.S. iron and steel industry.

Steel food cans can be recycled through the detinning industry, provided that the material is prepared to meet certain specifications. Of course, markets also exist for other ferrous metals so long as the material is prepared sufficiently to meet a buyer's specifications and is available in sufficient quantities.

Aluminum

Aluminum cans are typically recovered and recycled at a greater rate than any other element of the municipal waste stream because of their high market value. Other aluminum and other non-ferrous metals can also be recovered, provided that the materials are prepared such that buyers' specifications are met. The total amount of non-ferrous metals (including aluminum) in the Town's waste stream was estimated to be approximately 1 percent based on the adjusted composition data in Table 3-13, although the relative amounts of aluminum cans and other non-ferrous metals is uncertain.

Glass

Glass recycling has always been a routine part of glass plant operations. Markets exist for clean, color-sorted cullet (crushed glass) and limited markets exist for mixed-color glass. Based on the adjusted composition data in Table 3-13, all glass amounted to about 9 percent of the Town's waste stream.

Some glass products are not generally considered recyclable because they incorporate other material into their structure that are commonly considered contaminants by the secondary glass materials industry. Light bulbs are an example. In addition, some glass is produced with chemical compositions that differ significantly from common beverage glass formulations, for example certain window glass and cookware glass. These items are also frequently considered to be contaminants in glass cullet.

The portion of glass in the Town's waste stream that would be considered to be recyclable as color-sorted glass cullet is estimated to be approximately 7 percent based on the adjusted composition data in Table 3-13.

Other Materials and Products

Certain other materials and products can be used or recycled if diverted from the waste stream. For example, white goods (stoves, refrigerators, water heaters, etc.) can generally be salvaged for scrap metal. Some markets exist for used auto and truck tires. Sand and dirt that arrive in separate loads can be used as cover material at the Landfill, or used as structural or non-structural fill material, depending on soil types and contamination levels.

More importantly, certain biodegradable organic materials can be composted to produce a soil conditioner. Depending upon the quantities of organic wastes, particularly wood waste and yard waste, composting can divert a significant fraction of the material from the Landfill. Of course, there must be uses or markets to absorb the composted product. Compost has a number of potential uses. Depending on the quality of the compost, it may be a soil amendment useful for landscapers, nurseries, golf courses, sod farms, parks, and home gardens. Alternatively, compost may be used as final cover, daily cover or slope material at a landfill.

3.3.3.1 Current Recycling Quantities

On June 15, 1989 the Town's voluntary recycling program was extended and made mandatory for newspapers, leaf and yard waste, and scrap metal. The following materials are now recycled.

- newspaper (mandatory 6/15/89)
- cardboard
- tires
- white goods (mandatory 6/15/89)
- glass
- cans
- waste oil
- batteries
- leaf and yard waste (mandatory 6/15/89)

Recyclables are delivered to the Landfill where they are stored in an assortment of roll-off containers and trailers prior to market sales (see Section 3.2.3, Existing Town Recycling Program). Table 3-14 is a summary of the materials recycled in 1987 and 1988 under the voluntary program. There are no data available from the mandatory program at this time.

3.3.3.2 Construction and Demolition Debris

As previously discussed in Section 3.2.3, Recycling Programs, most C&D debris generated in the Town is processed at a permitted processing center operated by George's Sanitation. Any C&D debris that is not recycled (see Section 3.2.2, Collection) is disposed of at a permitted C&D landfill on Route 110 in Farmingdale (approximately 50 miles from Southampton).

George's Sanitation does not weigh materials, but reportedly receives between 200 to 300 cubic yards per day (5 days per week) during the winter when new construction is slow, and 600 or more cubic yards per day during the summer. George's Sanitation estimated that more than 90 percent of the C&D waste delivered comes directly from the Town. Table 3-15 presents estimated C&D waste generation rates for the Town and compares these rates with national averages. As indicated, C&D debris per capita generation for the Town is significantly higher. The higher rate can be expected given the extent of new construction within the Town.

MALCOLM PIRNIE

TABLE 3-14

TOWN OF SOUTHAMPTON
1987 AND 1988 SUMMARY OF RECYCLABLES

Material	1987 (Tons) (1)	1988 (Tons) (1)
Newspaper	281	907
Cardboard	161	421
Tires	161	81
White Goods	564	703
Glass/Cans	Not Recycled	122
TOTAL	1167	2234
Percent of Total Waste	2%	3%

Note:
(1) Data obtained from Landfill scalehouse records.

MALCOLM PIRNIE

TABLE 3-15

TOWN OF SOUTHAMPTON

CONSTRUCTION AND DEMOLITION DEBRIS
GENERATION ESTIMATES

	Southampton[1]		
	Cubic Yard[2] Day	TPD[3]	lbs./capita[4] day
Seasonal Low	200	30	0.75
Annual Average	400	60	1.50
Seasonal High	600	90	2.25

Notes:

(1) Based on conversations with George's Sanitation, over 90 percent of all C&D delivered to its facility is generated within the Town.

(2) Based on estimates by George's Sanitation of C&D delivered to its transfer station 5 days week.

(3) Based on a seven day week and estimated average density of 400 lbs./cubic yard. The average density was calculated based on descriptions of the types of waste received (high wood composition) and ranges of C&D densities from the following source: Tchobanoglous, G., Theisen, H., and Eliassen, R.; Solid Wastes: Engineering Principals and Management Issues; McGraw-Hill, 1977.

(4) Based on 1988 weighted population of 76,350 (see Table 3-3).

3.3.3.3 Potential Capture of Selected Source Separated Recyclable Materials

In order to estimate the quantities of materials the Town could initially recycle during the next few years from a curbside source separation program, the waste stream has been divided into the categories shown in Table 3-16 and quantified. Category No. 1 includes separately delivered materials, such as white goods, tires and organic farm wastes that can be at least 95 percent recycled. Category No. 2 materials including glass, metals, paper products, plastics and yard wastes, are those usually collected in curbside programs and are designated as potentially recyclable as discussed below. Category No. 3 is the remaining mixed waste that may contain other recyclables, but most likely will require processing to remove them. However, this extraction is uncertain, depending on the cost and the system selected.

Table 3-17 summarizes the approximate theoretically available quantities of selected recyclable materials in Waste Category No. 2 of Table 3-16. Further, it is noted that this category could contain more or less material, depending upon what may be targeted for source separation.

The 88 tpd of selected recoverable materials (Category No. 2) are theoretically almost 60 percent of the total waste stream. However, since participation in the recycling program and efficiency will vary, all of the 88 tpd of recyclables present in the waste stream will not be recycled. The fraction of the total amount of recyclables that will be recycled is defined as the capture rate, as described below.

In order to estimate a net capture rate for the selected recyclables, a number of variables need to be defined. The net capture rate for each material in the potentially recyclable fraction can be calculated using the following formula:

$$CR = TA \times PR \times PS \times PE$$

Where:

CR = Capture Rate
TA = Theoretically Available Material Quantity

PR = Probable Participation Rate
PS = Physical Separation Rate
PE = Processing Efficiency

The processing efficiency is the efficiency factor of the facility (MRF) to process the source separated materials. The efficiency will depend on a number of factors including equipment, markets, and quality of material received. The probable participation rate factor is defined as a percentage of the total number of residents participating in the source separation program within the Town. The physical separation rate factor is identified by the percentage of the total quantity of recyclable materials source separated by each participating household. Although a certain amount of recyclable waste is generated, no household can separate 100 percent of each available recyclable for collection. The theoretically available material quantity is the amount of recyclables in the waste stream based on the waste stream composition. The net capture rate is the theoretical amount of recyclables that can potentially be source separated based on the PE, PR, and PS.

In order to demonstrate how these variables affect the capture rate, the following is an example of typical capture rate variables for an aggressive source separation program utilizing a state-of-the-art materials recovery facility (MRF). In the case of a mature newspaper recycling program, a typical physical separation rate, probable participation rate, and process efficiency is approximately 90, 80, and 95 percent, respectively. Thus, the resulting capture rate may be about 70-75 percent. However, in the case of cans and bottles, experience has indicated that physical separation rate, probable participation rate, and processing efficiency are likely to be about 75, 70, and 90 percent, respectively. Therefore, the resulting capture rate may be approximately 50 percent. Of course, when the program is first starting, the net capture may be much lower than this. These examples illustrate some of the variability that is likely between materials and demonstrates how difficult it can be to reach high capture rates for individual materials.

To estimate the quantities of the potentially recyclable materials for program planning purposes, net capture rates of 20, 40, 60 and 80 percent have been assumed, which can represent various stages of program

TABLE 3-16

TOWN OF SOUTHAMPTON
THEORETICAL WASTE CATEGORY QUANTITIES

	Waste Category	Tons/Day[4]
1.	Separately Delivered[1] Material	20
2.	Selected Recyclable[2] Materials	88
3.	Remaining Processible[3] Waste Stream	80
	TOTAL	188

Notes:

(1) Separately delivered material that can likely be diverted from the Landfill (i.e., some organics, sand, dirt, tires and white goods).

(2) Selected curbside recyclable materials that could potentially be separated out for separate collection (i.e., cardboard, newspaper, glass, cans, office paper, plastics and yard waste).

(3) Processible waste that may include other recyclable materials, but would require some form of processing (i.e., garbage and miscellaneous categories).

(4) Based on 365 days per year.

TABLE 3-17

TOWN OF SOUTHAMPTON
SELECTED RECYCLABLE MATERIALS

Material	Theoretically Available Tons/Day(1)
Cardboard	29
Newspaper	11
Glass	13
Cans	9
Office Paper	9
Plastics	2
Yard Waste	15
TOTAL	88

Note: (1) Estimated utilizing the following theoretical percentages of the Town's waste stream, which are based on the adjusted data presented in Table 3-10.

- Cardboard = 16%
- Newspaper = 6%
- Glass (Containers) = 7%
- Cans = 5%
- Office Paper (High Grade) = 5%
- Plastic (PET/HDPE) = 1%
- Yard Waste = 15%. Although there are 28 tpd of yard waste theoretically available as shown in Table 3-10, 13 tpd are currently separately delivered to the Landfill (Table 3-15). Thus, 15 tpd of yard waste still remain in the Town's waste stream.

development. Table 3-18 summarizes the quantities of recyclable materials that could be recovered at the various capture rates based on 1988 tonnage. Table 3-18 also shows the total waste stream reductions due to the recycled materials in Category No. 2 of Table 3-16 along with the organic and other material in Category No. 1 of Table 3-16.

Based on the scenarios presented in Table 3-18, the portion of the total waste stream recycled could almost reach 40 percent by attaining a 60 percent effective net capture rate for the selected recyclables and 100 percent removal of all the materials in Category No. 1 of Table 3-16. Since a 60 percent net capture rate may be difficult to achieve as discussed above, it may be desirable to add other materials to the selected recyclables in Table 3-18 for source separation in order to meet the 40 percent State goal by 1997. These materials may include mixed paper, mixed plastics, textiles, and other materials discussed in Section 3.3.3, Recyclable Materials. Alternatively, this goal could be achieved by removing recyclables (such as compost) from the mixed waste stream.

3.3.4 East End Towns Waste Quantities

The town supervisors of the five East End Towns (Southampton, Riverhead, Southold, East Hampton, and Shelter Island), E2RA have supported a regional approach for reducing the amount of solid waste disposed within their respective towns. They have collectively applied for and received a NYSDEC Local Resource Reuse and Recovery Program (LRRRP) grant. This grant will help to support a regional recycling coordinator's salary and the cost of a public promotional/educational campaign for recycling. See Section 6.2.1, Eastern Long Island Towns, for a more detailed discussion of the LRRRP grant and the regional cooperation of the five East End Towns.

Since an E2RA intertown agreement would likely involve marketing or processing of source separated recyclables from the five East End Towns, an approximation of the potential recycling quantities from these towns has been calculated to determine how this may impact the Town's planning. Figure 3-2 is a regional map illustrating the 1988-1989 New York State Solid Waste Management Plan (NYSSWMP) annual solid waste tonnages for the East End Towns. In order to estimate the quantity of materials that may

be potentially recoverable from the five East End Towns and also from Brookhaven, similar recycling percentages as those used for Southampton were applied uniformly to the other towns. Table 3-19 summarizes the range of "hard recyclables" estimated to be potentially recoverable in a regional MRF during the initial years of program development. Of course, the actual amount collected would depend on the amount of material diverted from the total waste stream due to recycling in each town, since the timing and actual capture may vary significantly. However, these figures are useful in evaluating the feasibility and cost effectiveness of regional cooperation and for regional MRF planning.

3.3.5 Local Ordinances

The Town has jurisdiction over solid waste management operations within its boundaries. Chapter 37, Articles 1 and 2 of the Southampton Town Code delineates specific guidelines for controlling the material accepted at the Town's disposal facilities. These guidelines include the following:

- designated waste acceptance hours
- licensing requirements
- load characteristic restrictions (i.e., no hazardous waste or construction and demolition debris)
- usage fees (usage fees are waived for loads of recyclable materials such as clean white paper, newspaper or cardboard)
- penalties for any offenses
- scavenger waste (septage) regulations
- recycling requirements

In addition, the Town Board may adopt subsequent rules and regulations to control the conduct of licensees and to carry out the Sanitation Ordinance.

On April 26, 1989 the Towns enacted Local Law No. 10 which mandated source separation of newspaper, leaves and yard waste, and scrap metal by residents beginning June 15, 1989. Before January 1, 1990 glass, cans, cardboard, and high grade paper will be added to the mandatory program

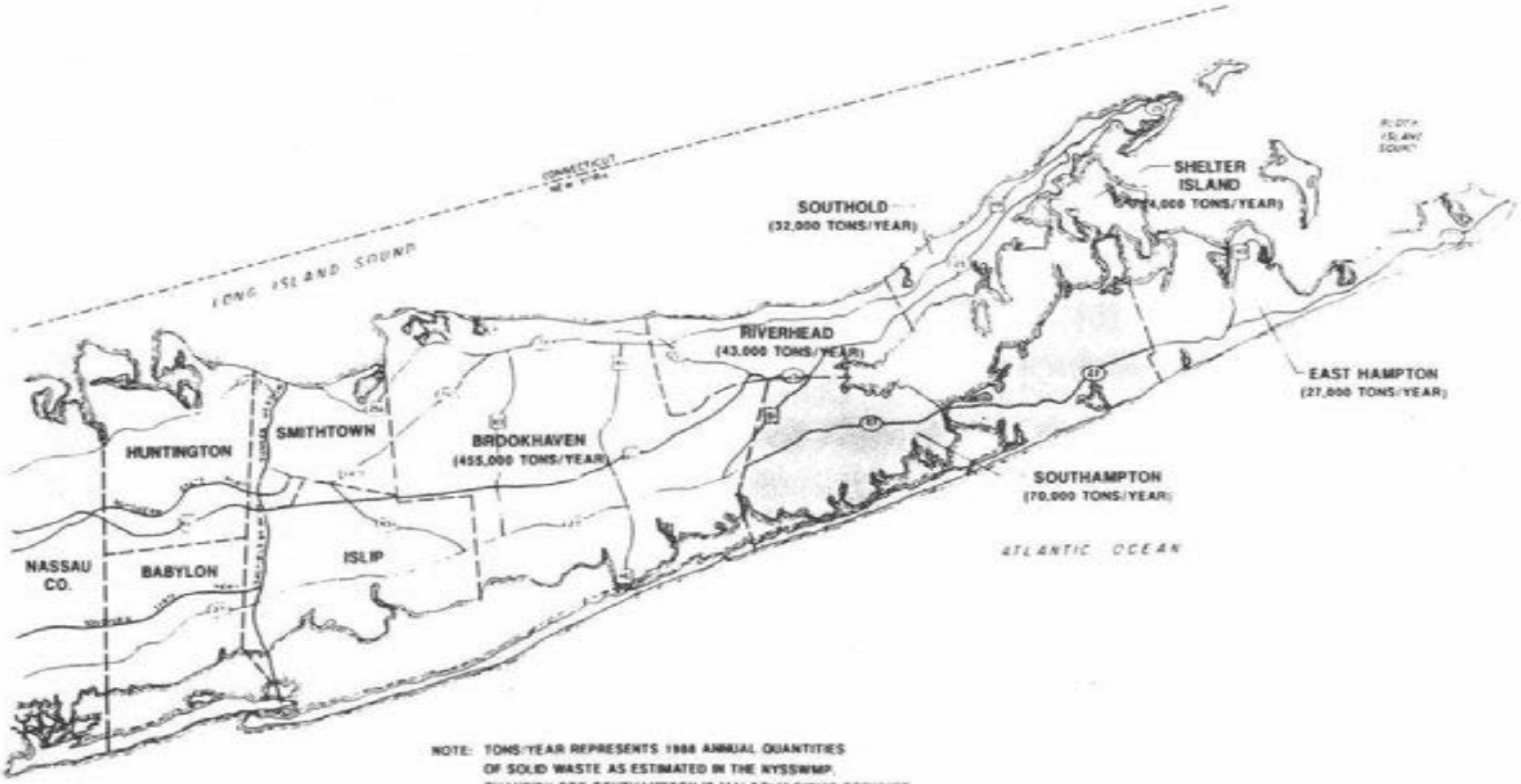

NOTE: TONS/YEAR REPRESENTS 1988 ANNUAL QUANTITIES OF SOLID WASTE AS ESTIMATED IN THE NYSSWMP. QUANTITY FOR SOUTHAMPTON IS MALCOLM PIRNIE ESTIMATE

TOWN OF SOUTHAMPTON
SOLID WASTE MANAGEMENT PLAN

REGIONAL MAP

4 0 4 8
SCALE IN MILES

FIGURE 3-2

MALCOLM PIRNIE

MALCOLM PIRNIE

TABLE 3-18

TOWN OF SOUTHAMPTON
POTENTIALLY RECYCLABLE SOURCE SEPARATED MATERIALS
ANNUAL AVERAGES - 1988 WASTE STREAM

Materials	Theoretical Recyclables(1) (tpd)	Effective Net Capture Rates(3) 20% (tpd)	30% (tpd)	40% (tpd)	60% (tpd)	80% (tpd)
HARD RECYCLABLES						
Newspaper	11	2	3	4	7	9
Cardboard	29	6	9	12	17	23
Glass	13	3	4	5	8	10
Cans	9	2	3	4	5	7
Office Paper	9	2	3	4	5	7
Plastic	2	0	0	1	1	2
Subtotal	73	15	22	30	43	58
Additional Yard Waste	15	3	4	6	9	12
Subtotal	88	18	26	36	52	70
	Material Actually Diverted	Assume 100% Continued Removal of Organics				
ORGANIC MATERIAL(2)						
Brush	5	5	5	5	5	5
Wood Chips	1	1	1	1	1	1
Leaves	5	5	5	5	5	5
Potatoes	1	1	1	1	1	1
Landscaping material	3	3	3	3	3	3
Subtotal	15	15	15	15	15	15
OTHER(2)						
White goods	2	2	2	2	2	2
Tires	0.2	0.2	0.2	0.2	0.2	0.2
Sand/Dirt	3	3	3	3	3	3
Subtotal	5	5	5	5	5	5
TOTAL RECYCLABLES CAPTURED	108	38	46	56	72	90
PERCENT OF TOTAL WASTE RECYCLED	57%	20%	25%	30%	38%	48%
REMAINING WASTE STREAM (TPD)	80	150	142	132	116	98

Note: (1) Represents theoretical values for Hard Recyclables based on "Adjusted Average TPD" in Table 3-12.
(2) Represents actual 1988 quantities of Organic and Other Materials separately delivered to the Landfill Appendix F.
(3) Seasonal variation is a 2:1 ratio of summer to winter.

MALCOLM PIRNIE

TABLE 3-19

TOWN OF SOUTHAMPTON
EAST END TOWNS POTENTIAL RECYCLING BASED ON 1988 QUANTITIES
THAT COULD BE PROCESSED IN A MRF

Towns	Recycling Quantities at 20% Net Capture Rate of Selected Materials(1) (tpd)(2)		Recycling Quantities at 80% Net Capture Rate of Selected Materials(1) (tpd)(2)	
	Seasonal Low	Seasonal High	Seasonal Low	Seasonal High
Southampton	10	20	39	78
Riverhead	6	12	25	50
Southold	5	10	18	36
East Hampton	4	8	15	30
Shelter Island	0	1	2	4
Total East End	25	51	99	198
Total (Annual Average)	13,800		54,800	
Brookhaven	65	130	260	520
Total	90	181	359	718
Total (Annual Average)	49,500		197,400	

Note: (1) Selected materials include cardboard, newspaper, glass, cans, office paper (high grade),and plastic (PET, HDPE). The 20 and 80 percent net capture rates represent the respective percentage of each selected material from the Figure 3-2 estimated tonnages as shown for each East End town. The seasonal highs and lows represent possible ranges for quantities of captured recyclables that may be experienced throughout the year.

(2) 7-day basis.

which will amend Local Law No. 10. See Section 6.6.3, Mandatory Participation Laws, for a more detailed discussion of the mandatory source separation programs.

3.3.6 Septage

There is no sewer or wastewater treatment system in the Town and all wastewater sludge is removed by private septage haulers. Domestic septic tank waste (i.e., septage or scavenger waste) is a partially digested mixture of liquid and solid material that originates as waterborne domestic wastes and accumulates in a septic tank or a cesspool over a period of years. Normally, septage may include pumpings from the septic tanks of homes, schools, restaurants, motels, and other types of businesses and industries.

Septage generated in the Town is being disposed of at the Riverhead Scavenger Waste Treatment Plant by private septage haulers. The haulers are charged 3.5 cents ($0.035) per gallon of septage based on the capacity of the hauler's tank and not on the actual gallons of septage in that tank. Table 3-20 summarizes the 1988 quantities of Southampton septage.

TABLE 3-20

Town of Southampton
1988 Estimated Septage Quantities

Southampton Septage	1988 Quantity
Total Gallons[1]	10,530,000 gal/year
Wet Tons[2]	46,100-48,300 ton/year
Dry Tons[3]	165-220 ton/year

Notes: (1) Based on recorded amounts of septage delivered to the Riverhead Scavenger Waste Treatment Plant in 1988.

(2) Based on the recorded range of total suspended solids (3,00-4,000 mg/l) and the recorded gallons of septage delivered to the Riverhead Scavenger Waste Treatment Plant.

(3) Based on an assumed specific gravity of 1.05 to 1.10 for domestic septage at 0.30 percent solids.

Based on the total gallons per year (10,530,000 gallons), the total annual fee charged to the private haulers was approximately $370,000 for 1988. Note that the dry tons of septage is very small compared to the large annual volume of septage delivered to the treatment plant. This is due to the small amount of suspended solids (approximately 0.33 percent) present in the domestic septage compared to normal domestic septage that contains 1.7 to 2.3 percent suspended solids as estimated by the United States Environmental Protection Agency (USEPA).

3.3.7 Household Hazardous Waste

Household hazardous waste including pesticides that otherwise would be considered hazardous under Part 371 is not considered a hazardous waste because it is generated by residential sources and public or private recreational areas. Many consumer products used within the home contain potentially harmful chemicals. Few homeowners are aware of these hazardous components and most do not consider themselves generators of hazardous waste. According to NYSDEC and the Nassau/Suffolk Regional Stop Throwing Out Pollutants (STOP) Program, the following are some general household hazardous wastes that may need proper disposal separate from typical municipal solid waste:

- household cleaners
- detergents
- plant and insect sprays
- paint products
- batteries
- waste oil

Although many of these household hazardous wastes are present on a daily basis, there are few convenient and environmentally sound disposal methods available. Regrettably, many improper disposal methods are used by homeowners which include sending household hazardous waste to landfills, pouring waste chemicals down the drain, and dumping hazardous chemicals onto the ground or streets.

In response to these actions, the STOP Program was formed in 1984 under the direction of NYSDEC. The primary objectives for STOP are:

- encourage and assist with household hazardous waste management at the municipal level
- increase public awareness through educational programs

- research feasibility of long-term options for household hazardous waste management

Through the STOP Program, the Household Pollutant Clean-up Day was developed to allow the public to take leftover quantities of household hazardous waste to a central location at a scheduled date and time. The waste is collected, segregated and packaged by a professional hazardous waste handler who then transports the waste for final processing or disposal. Southampton has held eight household hazardous waste collection days since 1985.

Recognizing the advantages of having a permanent facility where residents may bring their household pollutants on any day, the Town intends to establish a permanent collection facility. On June 15, 1989, the Town submitted a permit application to the State to construct and operate a permanent STOP facility. This facility will provide a safe and convenient means of collecting household hazardous waste within the Town. The facility will be located at the landfill and will be available to all Town residents. The waste collected at the facility will be temporarily stored within a properly constructed storage building and periodically removed and disposed of by a NYSDEC approved hauler. No on-site disposal of any collected household hazardous will take place.

3.0R WASTE STREAM QUANTIFICATION AND CHARACTERIZATION

3.1R EXISTING SOLID WASTE MANAGEMENT PROGRAM

In addition to the Town's solid waste management program described in Section 3.2 of the Original SWAMP, the Town has expanded its waste reduction and recycling initiatives. During 1989, the Town enacted Local Laws 10 and 24 which mandate source separation of newspaper, corrugated cardboard, mixed paper, HDPE and PET plastics, tin cans, aluminum, vegetative yard waste and glass. The inclusion of mixed paper to the list of mandatory recyclables required the Town to add roll-off containers at each of its transfer stations.

After receiving the necessary approvals from the NYSDEC, the Town has also constructed and has been operating a permanent Stop Throwing Out Pollutants ("STOP") facility at the North Sea Landfill. Residents can dispose of their household hazardous waste at the STOP facility three days a week throughout the year. While the STOP program is not mandatory, residents have responded favorably to it. Since it began operating in June 1991, the STOP facility has collected 144 drums of household hazardous waste. The household hazardous wastes delivered to the STOP facility are stored temporarily and then transported out of town to licensed hazardous waste processing and disposal facilities.

The Town of Southampton has made significant strides in developing, promoting and enforcing a successful source-separation and drop-off program for newspapers, cardboard, tires, white goods and other scrap metals, glass, tin cans, waste oil, mixed plastics, leaf and yard wastes, office paper, batteries and manure and other organic materials. In 1989, a total of 3,172 tons of waste was source-separated and recycled, and by 1991, that amount increased to 5,071 tons. In the first half of 1992 alone, 2760 tons were recycled. In light of the fact that this occurred during the off-peak season, the Town expects source-separation and recycling figures to well exceed those experienced in 1991. Most importantly, the success of this program has resulted in decreasing quantities of waste disposed of at Cell No. 3.

In addition to the Town-operated recycling programs, private haulers, at the request of the Town, have been encouraging their respective commercial clients to begin or expand

their recycling activities. This has resulted in an increase of commercial recycling. Specifically, several commercial establishments within the Town that generate large quantities of corrugated cardboard have purchased their own balers for preparing and transporting this material directly to the appropriate markets without the need to pass through the Northern Landfill.

Furthermore, the Town has continued to be the leading force behind the East End Recycling Association (E2RA). The Town and E2RA have begun a proactive approach to public education pertaining to waste reduction and recycling. Beginning in June 1990, the E2RA has been responsible for the airing of a recycling program on a local cable television station and the publication of informative brochures on enhancing recycling and developing home composting operations. The Town has also sponsored several class trips from local schools to the North Sea Landfill in an effort to educate students in the areas of waste reduction, recycling and disposal.

3.2R SOLID WASTE QUANTIFICATION AND CHARACTERIZATION

As noted in Section 3.3 of the Original SWAMP, estimates of solid waste quantities are essential in solid waste management planning. The following subsections present an updated and refined discussion of actual and projected waste quantities and estimated waste compositions for the components comprising the Town's waste stream.

3.2.1R Solid Waste Quantities

Since the issuance of the Original SWAMP, updated solid waste quantities generated by the Town have been estimated and recorded. Table 3R-1 summarizes the quantities of solid waste that were landfilled, recovered, and processed during the years of 1987 through 1991. The sum of the annual waste quantities in Table 3R-1 provide an estimate of the Town's solid waste generation rates during those years. These actual generation rates were compared to the estimated future generation rates summarized in Table 3-12 of the Original SWAMP to determine if revisions of the projected waste quantities were required.

Although the projected waste generation rates shown in Table 3-12 of the Original SWAMP did not include C&D waste or septage waste, comparison of the actual waste quantities to the projected waste quantities was still possible. After subtracting the quantity of C&D and septage waste from the waste generated as indicated in Table 3R-1, the

TABLE 3R-1

TOWN OF SOUTHAMPTON
HISTORICAL SOLID WASTE QUANTITIES

MATERIAL TYPE	YEAR 1987 (Tons)	1988 (Tons)	1989 (Tons)	1990 (Tons)	1991 (Tons)
Waste Landfilled (Weighed) (1)	61,160	59,390	62,400	50,300	61,310
Waste Landfilled (Unweighed) (2)	7,330	8,620	6,000	6,000	5,000
Total Waste Landfilled	68,490	68,010	68,400	56,300	66,310
Recyclables Recovered (3)	1,170	2,300	4,240	4,450	5,060
Leaf/Yard Waste Recovered (4)	300	500	2,000	3,500	4,500
Total Materials Recovered	1,470	2,800	6,240	7,950	9,560
C&D Waste Processed (5)	No Data	20,000	20,000	20,000	20,000
Septage Waste Processed (6)	No Data	200	200	200	200
Total Waste Processed	No Data	20,200	20,200	20,200	20,200
Total Waste Generated (7)	69,960	91,010	94,840	84,450	96,070

Notes: (1) Based on North Sea Landfill scalehouse records. Includes all waste received and weighed at the North Sea Landfill.

(2) Based on estimates by North Sea Landfill personnel. Includes all estimated self-hauled waste devlivered to the North Sea Landfill but not weighed.

(3) Based on North Sea Landfill scalehouse records. Includes all recyclables recovered and marketed.

(4) Based on North Sea Landfill scalehouse records and estimates of incoming source separated leaf and yard waste quantities that were reused by Town residents and/or composted at the landfill. Leaf and yard waste composting did not begin until 1989. Additional yard waste beyond typical quantities generated were recovered in 1991 due to Hurricane Bob. These additional quantities are not included in the 1991 leaf and yard waste figure.

(5) Based on estimates of C&D waste processed at private processing and recycling facilities.

(6) Based on estimates and records of "dry" septage processed at the Riverhead Scavenger Waste Treatment Plant.

(7) Sum of Total Waste Landfilled, Total Materials Recovered, and Total Waste Processed.

remaining waste quantities generated in 1989 and 1991 correspond closely to the projected 1990 waste generation rate in Table 3-12 of the Original SWAMP. In addition to this close correspondence, there is no updated information available on population or per capita generation rates. Therefore, the projected rate of annual increases for waste generation will remain the same for the purposes of this Revised SWAMP.

Table 3R-2 provides a historical summary of the materials that have been recovered from the Town's waste stream for purposes of recycling and composting. As illustrated in Table 3R-2, since 1987 the Town has progressively increased the number of different materials included in its recycling program. These include glass, cans, plastic, aluminum, waste oil, car batteries, office paper, and other scrap metals. The increasing number of materials being recycled along with the enactment of the mandatory source separation laws have resulted in significant increases of the quantity of materials recycled in the Town from 1987 to 1991.

3.2.2R Solid Waste Composition

Since the issuance of the Original SWAMP no new data has become available on the composition of the Town's waste stream. Therefore, it is assumed that the composition has remained the same. Table 3R-3 summarizes the existing waste stream composition data used in the Original SWAMP, but provides additional footnotes to identify the materials included in the various components.

Although the waste stream composition has remained the same, it has been revised to incorporate C&D and septage wastes as part of the Town's total waste stream. Table 3R-4 illustrates the Town's total adjusted waste stream composition which includes C&D waste and septage waste. The total adjusted waste stream composition is based on actual and estimated waste quantities generated in the Town during 1991. The materials listed in Table 3R-4 have been rearranged to correspond to the particular handling each type of material will encounter upon implementation of the Town's proposed solid waste management program.

3.2.3R Solid Waste Generation Projections

Based on the estimates of the Town's waste stream and the total adjusted waste stream composition data discussed above, projected material quantities for the total waste stream were projected for the entire 20-year planning period. The population and per

capita generation rate changes discussed in the Original SWAMP were used for these estimates. Table 3R-5 summarizes the projected solid waste quantities. All quantities in Table 3R-5 are theoretical waste stream generation projections prior to any waste reduction, reuse or recycling.

TABLE 3R-2

TOWN OF SOUTHAMPTON
HISTORICAL QUANTITIES OF RECOVERED MATERIALS (1)

MATERIAL TYPE	YEAR 1987 (Tons)	1988 (Tons)	1989 (Tons)	1990 (Tons)	1991 (Tons)
Newspaper	280	910	1,280	1,730	1,725
Cardboard	160	380	1,420	545	890
Glass	NR	110	285	650	840
Cans	NR	10	40	185	250
Tires	160	130	110	145	140
White Goods	570	670	950	940	875
Other Scrap Metal	NR	20	15	30	NR
Plastics	NR	NR	70	110	205
Aluminum	NR	NR	NR	10	10
Waste Oil	NR	70	70	90	100
Car Batteries	NR	NR	NR	15	15
Office Paper	NR	NR	NR	NR	10
Leaf and Yard Waste	300	500	2,000	3,500	4,500
TOTAL MATERIALS RECOVERED	1,470	2,800	6,240	7,950	9,560

NOTES: (NR) Material was not recycled by the Town.

(1) Represents quantities of source separated recyclables received at the North Sea Landfill and the Hampton Bays and Westhampton transfer stations. Does not include private sector initiatives to source separate and directly market reyclables.

TABLE 3R-3

TOWN OF SOUTHAMPTON
EXISTING WASTE STREAM COMPOSITION DATA

COMPONENTS	COLUMN A (1) LANDFILL DATA (Percent)	COLUMN B (2) COMPOSITION STUDY DATA (Percent)	COLUMN C (3) COMBINED DATA (Percent)	COLUMN D (4) ADJUSTED DATA (Percent)
PAPER	1.2	38.2	34.3	42.0
OCC/Kraft	0.5	11.6	10.5	15.4
Newspaper	0.7			5.9
Office Paper (5)				5.1
Magazines				3.0
Mixed Paper (6)				4.2
Other Paper (7)				8.4
PLASTIC		8.6	7.5	6.2
Film				2.0
HDPE				0.7
PET				0.1
Polystyrene				0.1
Other Plastic (8)				3.3
YARD WASTE	7.7	11.8	17.9	14.9
WOOD	1.1	4.0	4.6	3.8
FOOD	0.3	10.9	9.8	8.2
TEXTILES		3.2	2.8	2.3
OTHER ORGANICS				4.3
METALS		9.1	7.9	6.5
Steel Cans				3.2
Bimetal Cans				0.7
Aluminum Cans				0.9
Other Aluminum				0.4
Other Metals				1.3
GLASS	0.1	14.0	12.1	8.6
Clear				3.8
Brown				0.8
Green				2.4
Other				1.6
SOIL	1.6		1.6	1.6
OTHER INORGANICS (9)		0.2	0.2	0.3
BULKY ITEMS	1.1		1.1	1.1
TIRES	0.2		0.2	0.2
MIXED WASTE	86.7			
TOTAL	100.0	100.0	100.0	100.0

NOTES:

(1) Column A is based on visually characterized incoming solid waste and recyclables. Source is Town Landfill scalehouse data.

(2) Column B is based on H2M waste composition study in 1986.

(3) Column C was calculated by multiplying each component composition in Column B by 87.6 percent and adding the resulting product to the respective component composition in Column A.

(4) Column D is an adjustment of Column C based on other waste composition studies and other municipal waste stream data (See Appendix B of the Original SWAMP).

(5) Office paper includes high grade recyclable paper such as office type stationary.

(6) Mixed paper includes low grade recyclable paper such as household papers, envelopes, and junk mail.

(7) Other paper includes low grade contaminated paper such as used tissues, paper towels and napkins.

(8) Other plastic includes LDPE, PVC, and other mixed plastic.

(9) Other inorganics include used oil, batteries, paints, and other household hazardous waste.

TABLE 3R-4

TOWN OF SOUTHAMPTON
TOTAL ADJUSTED WASTE STREAM COMPOSITION

MATERIALS	EXISTING WASTE STREAM COMPOSITION (1)	THEORETICAL WASTE GENERATED (3) (TONS)	TOTAL ADJUSTED WASTE STREAM COMPOSITION (4)
MRF MATERIALS			
Newspaper	5.9%	4,476	4.7%
Cardboard	15.0%	11,381	11.8%
Clear Glass	3.8%	2,883	3.0%
Brown Glass	0.8%	607	0.6%
Green Glass	2.4%	1,821	1.9%
Steel Cans	3.2%	2,428	2.5%
Bimetal Cans	0.7%	531	0.6%
Aluminum Cans	0.9%	683	0.7%
Office Paper	5.1%	3,869	4.0%
HDPE Plastic	0.7%	531	0.6%
PET Plastic	0.1%	76	0.1%
Subtotal	38.6%	29,286	30.5%
LEAF/YARD WASTE COMPOSTING			
Leaf/Yard Waste	14.9%	11,305	11.8%
INDOOR ORGANIC COMPOSTING			
Contaminated Paper (5)	8.4%	6,373	6.6%
Food	8.2%	6,221	6.5%
Other Organics	4.3%	3,262	3.4%
Subtotal	20.9%	15,857	16.5%
DIRECT TOWN MARKETING			
White Goods (6)	1.8%	1,366	1.4%
Tires	0.2%	152	0.2%
Subtotal	2.0%	1,517	1.6%
OTHER WASTE RECYCLING			
Textiles	2.3%	1,745	1.8%
Wood Waste	3.8%	2,883	3.0%
Soil	1.6%	1,214	1.3%
Other Paper (7)	7.6%	5,766	6.0%
Other Plastics	5.4%	4,097	4.3%
Other Glass	1.6%	1,214	1.3%
Other Metals	1.0%	759	0.8%
Other Inorganics	0.3%	228	0.2%
Subtotal	23.6%	17,905	18.6%
WASTE FOR PRIVATE PROCESSING			
C&D Waste	(2)	20,000	20.8%
Septage Waste	(2)	200	0.2%
Subtotal	0.0%	20,200	21.0%
TOTALS	100.0%	96,070	100.0%

NOTES:
(1) Based on composition data in Column D of Table 3R-3.
(2) Composition data in Column D of Table did not include this material.
(3) Based on actual and estimated 1991 waste composition and quantities from Tables 3R-1,3R-2,and 3R-3.
(4) Composition from Original SWAMP is adjusted to account for C&D and septage waste.
(5) Includes similar material to "other paper" as listed on Table 3R-3.
(6) White goods composition derived from portion of "bulky items" and "other metals" listed in Table 3R-3.
(7) Includes similar material to "mixed paper" and "magazines" as listed on Table 3R-3.

TABLE 5R-5

TOWN OF SOUTHAMPTON
THEORETICAL WASTE GENERATION PROJECTIONS (1)

MATERIALS	TOTAL ADJUSTED WASTE STREAM COMPOSITION	1991 (TONS)	1992 (TONS)	1993 (TONS)	1994 (TONS)	1995 (TONS)	1996 (TONS)	1997 (TONS)	1998 (TONS)	1999 (TONS)
MRF MATERIALS										
Newspaper	4.7%	4,476	4,512	4,547	4,583	4,618	4,661	4,706	4,750	4,796
Cardboard	11.8%	11,381	11,471	11,561	11,652	11,739	11,851	11,963	12,077	12,192
Clear Glass	3.0%	2,883	2,906	2,929	2,952	2,974	3,002	3,031	3,060	3,089
Brown Glass	0.6%	607	612	617	621	626	632	638	644	650
Green Glass	1.9%	1,821	1,835	1,850	1,864	1,878	1,896	1,914	1,932	1,951
Steel Cans	2.5%	2,428	2,447	2,466	2,486	2,504	2,528	2,552	2,576	2,601
Bimetal Cans	0.6%	551	555	559	544	548	553	558	564	569
Aluminum Cans	0.7%	685	688	694	699	704	711	718	725	732
Office Paper	4.0%	3,869	3,900	3,931	3,962	3,991	4,029	4,068	4,106	4,145
HDPE Plastic	0.6%	551	555	559	544	548	553	558	564	569
PET Plastic	0.1%	76	76	77	78	78	79	80	81	81
Subtotal	30.5%	29,286	29,517	29,749	29,984	30,209	30,496	30,786	31,078	31,374
LEAF/YARD WASTE COMPOSTING										
Leaf/Yard Waste	11.8%	11,305	11,394	11,483	11,574	11,661	11,772	11,884	11,997	12,111
INDOOR ORGANIC COMPOSTING										
Contaminated Paper	6.6%	6,373	6,423	6,474	6,525	6,574	6,636	6,699	6,763	6,827
Food	6.5%	6,221	6,271	6,320	6,370	6,418	6,478	6,540	6,602	6,665
Other Organics	3.4%	3,262	3,288	3,314	3,340	3,365	3,397	3,429	3,462	3,495
Subtotal	16.5%	15,857	15,982	16,108	16,235	16,357	16,512	16,669	16,827	16,987
DIRECT TOWN MARKETING										
White Goods	1.4%	1,366	1,376	1,387	1,398	1,409	1,422	1,436	1,449	1,463
Tires	0.2%	152	153	154	155	157	158	160	161	163
Subtotal	1.6%	1,517	1,529	1,541	1,554	1,565	1,580	1,595	1,610	1,626
OTHER WASTE RECYCLING										
Textiles	1.8%	1,745	1,759	1,773	1,787	1,800	1,817	1,834	1,852	1,869
Wood Waste	3.0%	2,883	2,906	2,929	2,952	2,974	3,002	3,031	3,060	3,089
Soil	1.5%	1,214	1,224	1,233	1,243	1,252	1,264	1,276	1,288	1,300
Other Paper	6.0%	5,766	5,812	5,857	5,904	5,948	6,004	6,061	6,119	6,177
Other Plastics	4.3%	4,097	4,129	4,162	4,195	4,226	4,266	4,307	4,348	4,389
Other Glass	1.3%	1,214	1,224	1,233	1,243	1,252	1,264	1,276	1,288	1,300
Other Metals	0.8%	759	765	771	777	783	790	798	805	813
Other Inorganics	0.2%	228	229	231	233	235	237	239	242	244
Subtotal	18.6%	17,905	18,047	18,189	18,332	18,470	18,645	18,822	19,001	19,182
WASTE FOR PRIVATE PROCESSING										
C&D Waste	20.8%	20,000	20,158	20,316	20,477	20,631	20,826	21,024	21,224	21,426
Septage Waste	0.2%	200	202	203	205	206	208	210	212	214
Subtotal	21.0%	20,200	20,360	20,520	20,682	20,837	21,035	21,234	21,436	21,640
TOTALS	100.0%	96,070	96,830	97,590	98,360	99,100	100,040	100,990	101,950	102,920

NOTES: (1) Projected waste quantities are based on similar rates of increase as described in the Original SWAMP.

TABLE SR-5

TOWN OF SOUTHAMPTON
THEORETICAL WASTE GENERATION PROJECTIONS (1)

MATERIALS	2000 (TONS)	2001 (TONS)	2002 (TONS)	2003 (TONS)	2004 (TONS)	2005 (TONS)	2006 (TONS)	2007 (TONS)	2008 (TONS)	2009 (TONS)	2010 (TONS)
MRF MATERIALS											
Newspaper	4,841	4,900	4,959	5,019	5,080	5,139	5,196	5,253	5,311	5,369	5,428
Cardboard	12,308	12,457	12,608	12,761	12,915	13,066	13,210	13,355	13,502	13,650	13,801
Clear Glass	3,118	3,156	3,194	3,233	3,272	3,310	3,346	3,383	3,421	3,458	3,496
Brown Glass	656	664	672	681	689	697	705	712	720	728	736
Green Glass	1,969	1,995	2,017	2,042	2,066	2,091	2,114	2,137	2,160	2,184	2,208
Steel Cans	2,626	2,658	2,690	2,722	2,755	2,787	2,818	2,849	2,880	2,912	2,944
Bimetal Cans	574	581	588	595	603	610	616	623	630	637	644
Aluminum Cans	738	747	756	766	775	784	793	801	810	819	828
Office Paper	4,185	4,235	4,287	4,339	4,391	4,443	4,491	4,541	4,591	4,641	4,692
HDPE Plastic	574	581	588	595	603	610	616	623	630	637	644
PET Plastic	82	83	84	85	86	87	88	89	90	91	92
Subtotal	31,673	32,057	32,444	32,837	33,233	33,624	33,993	34,367	34,745	35,127	35,514
LEAF/YARD WASTE COMPOSTING											
Leaf/Yard Waste	12,226	12,374	12,524	12,675	12,828	12,979	13,121	13,266	13,412	13,559	13,709
INDOOR ORGANIC COMPOSTING											
Contaminated Paper	6,893	6,976	7,060	7,146	7,232	7,317	7,397	7,479	7,561	7,644	7,728
Food	6,728	6,810	6,892	6,976	7,060	7,143	7,221	7,301	7,381	7,462	7,544
Other Organics	3,528	3,571	3,614	3,658	3,702	3,746	3,787	3,829	3,871	3,913	3,956
Subtotal	17,149	17,357	17,567	17,780	17,994	18,206	18,405	18,608	18,813	19,019	19,229
DIRECT TOWN MARKETING											
White Goods	1,477	1,495	1,513	1,531	1,550	1,568	1,585	1,603	1,620	1,638	1,656
Tires	164	166	168	170	172	174	176	178	180	182	184
Subtotal	1,641	1,661	1,681	1,701	1,722	1,742	1,761	1,781	1,800	1,820	1,840
OTHER WASTE RECYCLING											
Textiles	1,887	1,910	1,933	1,957	1,980	2,005	2,025	2,048	2,070	2,093	2,116
Wood Waste	3,118	3,156	3,194	3,233	3,272	3,310	3,346	3,383	3,421	3,458	3,496
Soil	1,313	1,329	1,345	1,361	1,378	1,394	1,409	1,425	1,440	1,456	1,472
Other Paper	6,256	6,312	6,388	6,465	6,543	6,620	6,693	6,767	6,841	6,916	6,992
Other Plastics	4,431	4,485	4,539	4,594	4,649	4,704	4,755	4,808	4,861	4,914	4,968
Other Glass	1,313	1,329	1,345	1,361	1,378	1,394	1,409	1,425	1,440	1,456	1,472
Other Metals	821	830	841	851	861	871	881	890	900	910	920
Other Inorganics	246	249	252	255	258	261	264	267	270	273	276
Subtotal	19,365	19,599	19,836	20,077	20,319	20,557	20,783	21,012	21,243	21,476	21,713
WASTE FOR PRIVATE PROCESSING											
C&D Waste	21,630	21,892	22,157	22,425	22,696	22,962	23,214	23,470	23,729	23,989	24,253
Septage Waste	216	219	222	224	227	230	232	235	237	240	243
Subtotal	21,846	22,111	22,378	22,650	22,923	23,192	23,446	23,705	23,966	24,229	24,496
TOTALS	103,900	105,160	106,430	107,720	109,020	110,300	111,510	112,740	113,980	115,230	116,500

NOTES: (1) Projected waste quantities are based on similar rates of increase as described in the Original SWAMP.

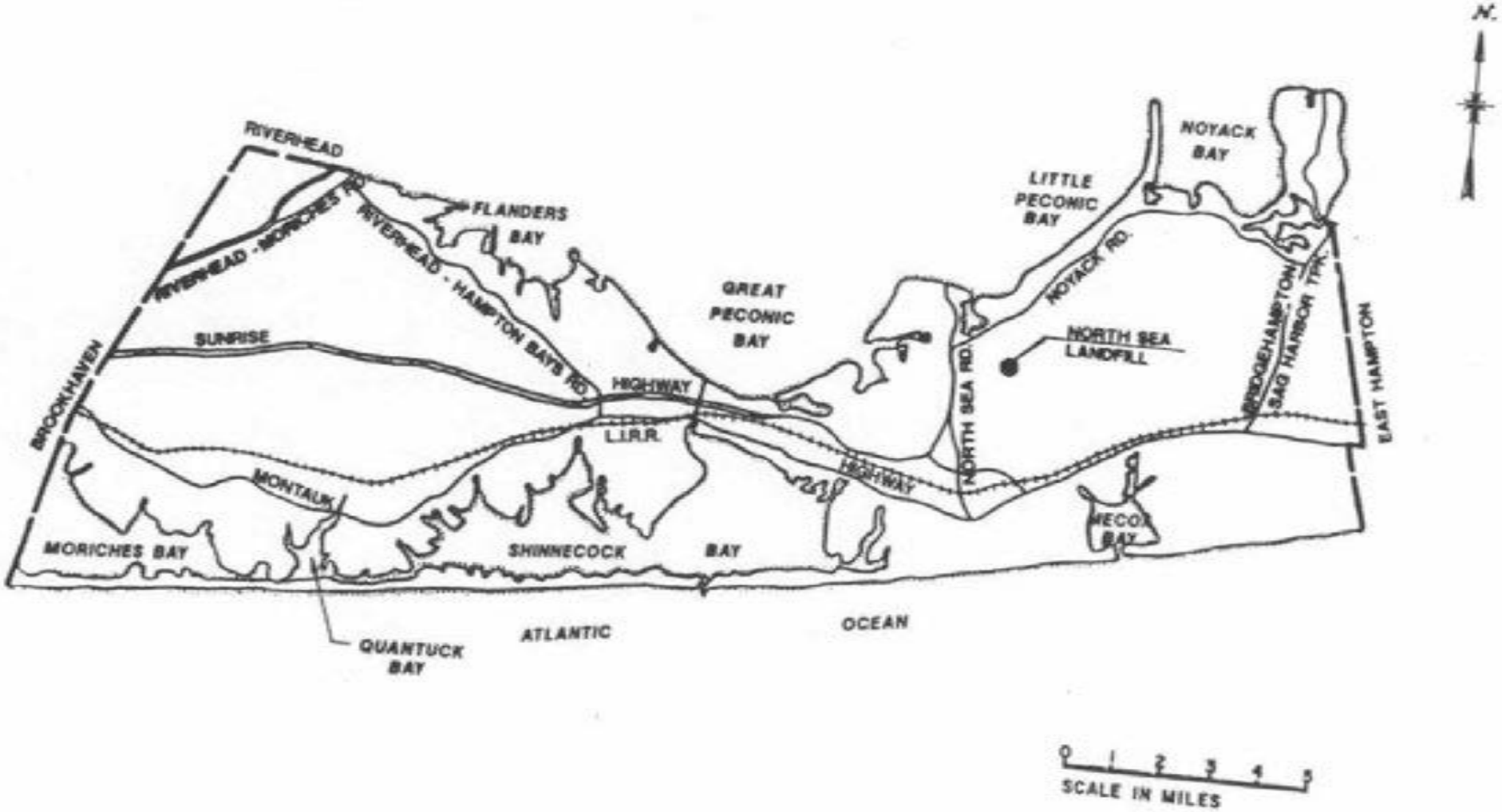

MALCOLM PIRNIE

TOWN OF SOUTHAMPTON
SOLID WASTE ACTION MANAGEMENT PLAN
LOCATION MAP

FIGURE 4

FIGURE 4-2

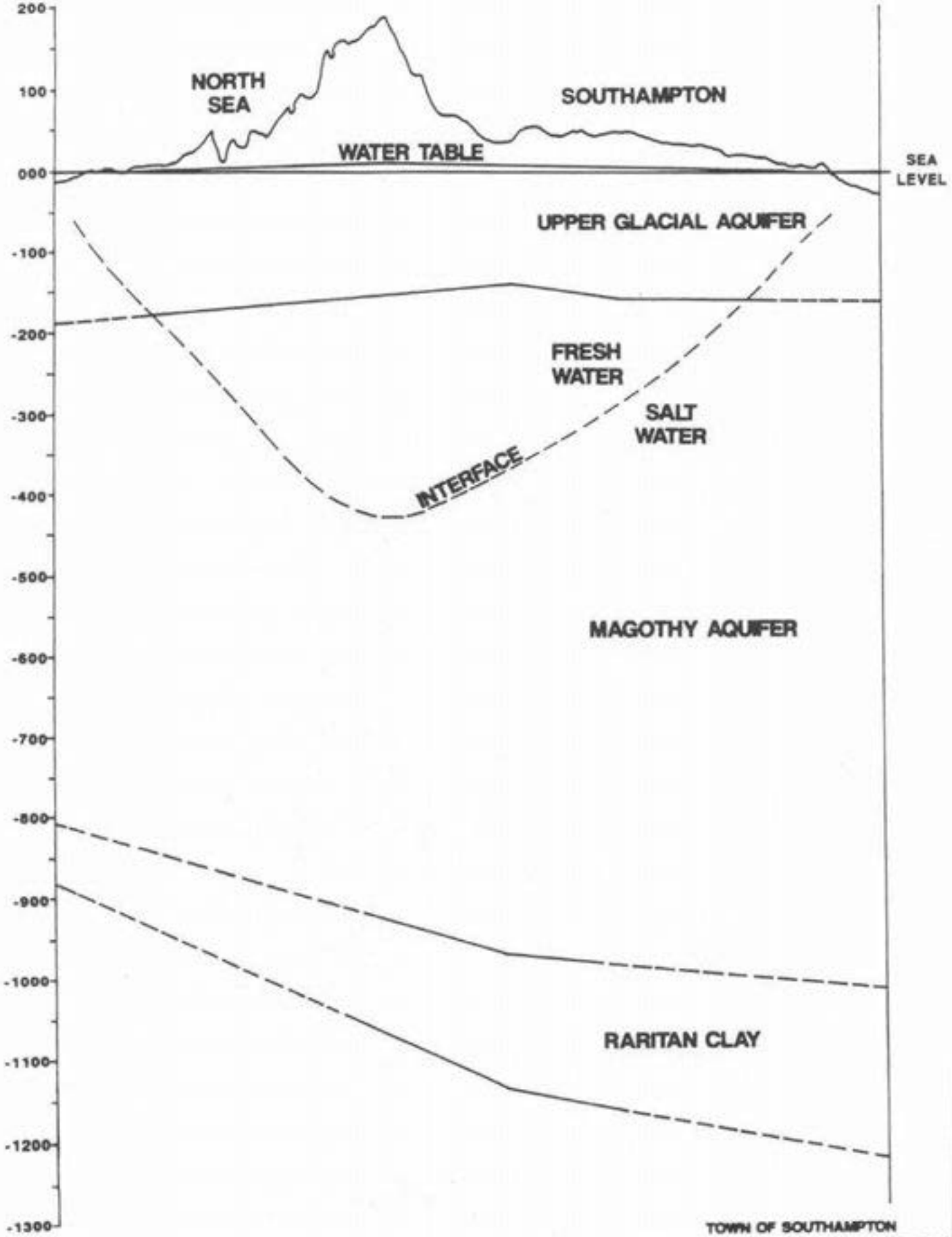

MALCOLM

TOWN OF SOUTHAMPTON
SOLID WASTE ACTION MANAGEMENT PLA
GEOLOGIC CROSS SECTION

from about 900 to 1,000 feet below msl and is described as dark gray and brown clay with some medium light brown sand.

The thickest Cretaceous sequence is the Magothy Formation-Matawan Group, which rests on the Raritan Formation. This unit is up to 800 feet thick, and the irregular upper surface occurs from about 150 to 200 feet below msl. It is a complex unit, consisting of beds and lenses of sand interbedded with silt and clay. Some of the clay beds are as thick as 40 feet and frequently contain lignitized wood. Concretions of pyrite and iron oxide are common. Up to 250 feet of Pleistocene deposits overlie the Cretaceous deposits in Southampton. Based on logs of wells drilled in the Town, these deposits consist chiefly of stratified, fine to coarse, tan sand with fine to medium gravel. Clay and silt are virtually absent. The beaches and marshes along the south shore consist of recent (Holocene) deposits derived from erosion of the outwash deposits. Marsh deposits, consisting of mud and peat, are found in bays, ponds, and some stream channels.

4.2 HYDROGEOLOGY

The unconsolidated sediments in the Town are saturated with water from the water table to bedrock. The upper portion of the ground water reservoir is fresh water which originates from local precipitation; the deeper ground water is salty. The water table extends from about sea level at the south shore to about 10 feet above sea level in Hampton Park. The water table slopes gently from Hampton Park toward Shinnecock Bay and the south shore. The thin fresh-salt water zone of diffusion is 20 to 60 feet thick and ranges in depth from about 50 feet at the southern shoreline to about 425 feet below msl under the Ronkonkoma terminal moraine north of Southampton.

Precipitation averages about 45 inches annually and about half of this (22 inches) is estimated to recharge the fresh ground water reservoir. The balance is accounted for by overland runoff (0.5 inches) and evapotranspiration (22.5 inches). The recharge of 22 inches is equivalent to an average rate of approximately one million gallons per day per square mile.

The geologic units on the south fork comprise several hydrogeologic units. The recent and Pleistocene deposits constitute what has been designated the Upper Glacial Aquifer. The Magothy Formation-Matawan Group, undifferentiated, constitutes the Magothy Aquifer, and the Lloyd Sand Member has been designated the Lloyd Aquifer. The clay member of the Raritan Formation is a confining layer separating the Lloyd Aquifer from the Magothy Aquifer. The fresh water body in Southampton occupies the Upper Glacial Aquifer and the upper part of the Magothy Aquifer, except near the south shore, where the fresh-salt water zone of diffusion rises steeply to the ocean bottom.

The hydraulic conductivity (horizontal) of the Upper Glacial Aquifer averages 350 ft/day and of the Magothy Aquifer is 70 ft/day. The transmissivity of the Upper Glacial ranges from about 600 ft^2/day to 22,700 ft^2/day.

The Upper Glacial Aquifer is the major source of water supply for the South Fork and is tapped by many wells. The water table, which is the upper glacial surface of the aquifer, fluctuates seasonally, generally rising from about the end of October to the end of April, which is the start of the growing season. The water table begins to decline in May and reaches its lowest elevation in October. Seasonal fluctuations are generally less than 4 feet, and are greater near the northern part of Southampton than at the south shore, where they are only about 1 foot (resulting from ocean tidal action). Droughts and excessively wet periods cause larger fluctuations and temporary variations in the times of the seasonal rise and fall. Data collected during the drought of the early 1960's indicated that there is about a one-year lag between precipitation and response of the water table.

The position of the fresh-salt water zone of diffusion is controlled by many factors, including heads in the fresh water and salt water bodies and density differences between fresh water and salt water. Pumpage and changes in recharge can produce encroachment by salt water. The United States Geologic Service (USGS) has found that the fresh-salt water relationship on the South Fork is approximately described by the Ghyben-Herzberg Principle, which states that the depth of the fresh water body below sea level is proportional to the fresh water head (water table

elevation) above sea level and is dependent on the water density. A reasonably accurate rule of thumb indicates that fresh water extends about 40 feet below sea level for each foot of fresh water head above sea level. In other words, if the water table is 10 feet above sea level, the fresh water lens will extend about 400 feet below sea level at that location. Although this relationship is not entirely accurate, it is generally used to estimate the thickness of the fresh water body on the South Fork. Because of stratification of the unconsolidated sediments, the hydraulic conductivity (permeability) of the sediments is greater horizontally than it is vertically, which results in a flattening or thinning of the fresh water body. As the fresh water-salt water relationship is in delicate balance, pumping of a well can result in a movement of salt water toward the well. Consequently, the location and pumpage of wells on the south fork is carefully regulated.

The surface fresh water in the Town flows generally south to southwest toward the ocean and Shinnecock Bay. The vertical component of movement would generally be upward, as the shoreline areas are discharge areas for the fresh water body. Generally, the chemical quality of the water in the fresh water body is good and suitable for most uses. However, iron chloride and nitrate occasionally occur in objectionable concentrations. Based on chemical analyses from 47 wells tapping the Upper Glacial Aquifer, Nemickas (1982) reported that the median concentration of iron is 0.47 mg/l, chloride is 19.0 mg/l, and nitrate is 0.62 mg/l. The maximum recorded values were 23.0 mg/l, 82.0 mg/l, and 11.0 mg/l, respectively. In the same report, the water quality in the Magothy Aquifer on the South Fork is characterized by analyses of samples from six wells. The mean value reported for iron is 0.49 mg/l, 13.0 mg/l for chloride and 0.47 mg/l for nitrate. The maximum values were 2.2 mg/l, 19.0 mg/l and 2.0 mg/l, respectively. The current drinking water standards in New York State are 0.3 mg/l for iron, 250 mg/l for chloride, and 10 mg/l for nitrate.

4.3 SURFACE WATER

The Town is bordered by water to the north and south. The Great Peconic Bay, Little Peconic Bay, Flanders Bay and Noyac Bay as well as smaller harbors and inlets are to the north of the Town, and Shinnecock Bay, Mecox Bay, Quantuck Bay and Moriches Bay and the Atlantic Ocean are located to the South (see Figure 4-2). In addition to these water bodies, numerous estuaries, creeks, marshes, ponds, and small rivers, including the Peconic River, Long Pond and Trout Pond exist in the Town. These water bodies are highly productive systems with differences in chemical properties, temperature, sunlight penetration, water movement, and coverage. Fresh water flow, resulting from stormwater runoff and ground water discharges, dilutes the salt content of the waters in the bays. Variations of salinity in surface waters extend from 0 at the fresh water/tidal water interface to 30 parts per thousand in the adjacent ocean. The average salinity of the bays is dependent upon the amount of tidal action and fresh water inflow.

The Town benefits from its proximity to these water bodies. They are an important part of the local economy. Various shellfish and finfish are harvested for from both table and industrial use. Sport fishing, waterfowl hunting, swimming, and other water sports are popular recreational activities. In addition, the marine environment provides endless opportunities for passive recreation and enjoyment of the natural beauty of the area, representing a major portion of Southampton's appeal to tourists.

4.4 AIR QUALITY

The Town is in the New York City Metropolitan Air Quality Control Region (AQCR), as designated by the U.S. Environmental Protection Agency (EPA). The AQCR program was established to assist states in attaining and maintaining acceptable ambient air quality levels. Primary national ambient air quality standards (NAAQS), based on a margin of safety to protect the public health, and secondary NAAQS, based on criteria to include protection of ecosystems, have been established for six criteria

pollutants to quantify acceptable ambient levels as shown on Table 4-1. Sulfur dioxide (SO_2), carbon monoxide (CO), photochemical oxidants (principally ozone), nitrogen dioxide (NO_2), particulate matter with aerodynamic diameter less than or equal to a nominal ten (10) microns (PM-10), and lead (Pb) are considered criteria pollutants.

Effective July 31, 1987, the National Primary and Secondary Ambient Air Quality Standards for particulate matter (40 CFR 50.6) were revised from the ambient concentration of total suspended particulates (TSP) to that of the ambient concentration of particulate matter having an aerodynamic diameter less than or equal to a nominal 10 microns (m) or PM-10. The fraction of suspended particulate matter larger than 10 m is considered settleable, whereas PM-10 is considered respirable and therefore may have a potentially adverse impact on health.

Within a particular region, the air quality has been classified according to whether standards for each of the criteria pollutants have been met. Where possible, the area is categorized as being in either attainment or non-attainment of NAAQS for each pollutant. Where attainment/non-attainment status cannot be defined, the area is considered "unclassified" for that pollutant and treated as being in attainment until proven otherwise. The attainment status for PM-10 and lead has not yet been formally established by EPA.

The Town is designated as in attainment for all criteria pollutants. The nearest monitoring location is in the Town of Babylon, also in Suffolk County. The Babylon monitoring station includes a manual monitoring station for TSP as well as a continuous monitoring station for SO_2, ozone and TSP. Measurements of TSP and SO_2 are below State and Federal standards. Ozone measurements, however, exceeding the one-hour average of 0.12 ppm were recorded on nine occasions during 1987. The Long Island Lighting Company (LILCO) maintained a monitoring network on the eastern end of Long Island, but discontinued sampling at these locations due to the continued low concentrations of each contaminant sampled.

4.5 CLIMATE AND METEOROLOGY

The daily weather and long-term climate of the Town are influenced by the water masses of the Atlantic Ocean and Long Island Sound, the associated bays and harbors that surround the Town, the adjacent land mass, and the west-to-east orientation of Long Island itself. Hence, the climate can be classified as coastal.

Temperature extremes are modified in the summer by the cooling ocean breezes which form off the south shore of Long Island and often extend all the way to the north shore. In winter, cold temperature extremes are also modified by the Long Island Sound and Atlantic Ocean. The average winter temperature is 32.5°F and the summer average is 71.9°F.

The Town occasionally experiences severe weather in the form of coastal and tropical storms. Hurricanes have caused extensive damage along the coastline on infrequent occasions. Local severe thunderstorms and tornadoes are almost non-existent because the conditions favorable for development of these storms are moderated by the adjacent water bodies.

The prevailing wind directions are northwest and south, reflecting the dominance of the cold arctic air masses in the winter and cooling ocean breezes in the summer. The annual average wind speed is a little over 9 mph.

The relative humidity, which is only a rough index of the moisture capacity of the air, varies from approximately 70 percent in the winter to 78 percent in the summer, again due to nearby sources of moisture. Precipitation is evenly distributed over the year. The average rainfall is approximately 45 inches per year and average snowfall is 20 inches per year.

4.6 SOCIO-ECONOMIC CONDITIONS

4.6.1 Population

According to the 1980 Census data, approximately 1,284,000 people are distributed over 900 square miles in Suffolk County (LILCO, 1988). The Town had a 1980 population of 43,146 people (LILCO, 1988) encompassing

TABLE 4-1

FEDERAL AMBIENT AIR QUALITY STANDARDS

Pollutant	Averaging Time	Primary ug/m^3	Secondary ug/m^3
PM-10	Annual Geometric Mean	50	50
	24-hour Maximum[1]	150	150
Sulfur Dioxide	Annual Arithmetic Mean	80	N/A
	24-hour Maximum	365	N/A
	3-hour maximum[1]	N/A	1300
Carbon Monoxide	8-hour maximum[1]	10000	10000
	1-hour maximum[1]	40000	40000
Nitrogen Dioxide	Annual Arithmetic Mean	100	100
Ozone	1-hour Maximum[2]	235	235
Lead	Quarterly Arithmetic Mean	1.5	1.5

Notes:

1. Maximum concentration not to be exceeded more than once per year.

2. Maximum concentration not to be exceeded more than an average of 1 calendar day per year.

N/A = Not Applicable.

Source: ENSR, 1988.

92,800 acres with a population density of 0.5 persons per acre. An increase in population of approximately 12 percent occurred between 1970 and 1980 in Suffolk County. The Town exceeded the County's trend with an approximate increase of 16 percent. Population estimates by the New York State Department of Commerce, LILCO and Long Island Regional Planning Board (LIRPB) predict that the populations of Suffolk County and the Town will steadily increase between the years 1990 and 2010.

The Town experiences a seasonal variation in population. Table 3-3 presents the projection of year-round population, seasonal population and summer peak. Southampton almost doubles in population during the warm weather months and experiences an additional peak of nearly 25 percent above the seasonal population on summer weekends.

4.6.2 Housing

There are approximately 432,000 housing units within Suffolk County at an average of 0.75 units per acre (LIRPB, 1982). Approximately 80 percent of these units are owner occupied.

The Town has approximately 28,500 housing units (both seasonal and permanent) with a housing density of 0.3 units per acre (LIRPB, 1982). In the Town of Southampton the housing vacancy rate is reported to be about 8.9 percent (LIRPB, 1982).

4.6.3 Economics

In 1988, the estimated median family income for Suffolk County was $40,599 (LIRPB, 1989). The Town's 1988 median family income was $32,565. The principal occupation categories of the Town's residents are professional, clerical, craftsman, and service occupations. The Economic Indicator Report for March 1989 reported Southampton's unemployment rate at 5.2 percent.

4.6.4 Transportation

Sunrise Highway (Route 27), a four-lane highway, and Montauk Highway (Route 27A), a two-lane roadway, are the two major roadways leading to the Town from the western portion of Long Island. Sunrise Highway intersects Montauk Highway just north of the Village of Southampton. Montauk Highway

continues eastward from that point through the Town to Montauk as Route 27.

The Montauk branch of the Long Island Railroad (LIRR) originates in New York City and traverses the Town to its ending destination in Montauk. According to the LIRR public relations department, the train makes seven stops within the Town: Bridgehampton, Southampton (Village), Southampton College, Hampton Bays, Quogue, Westhampton and Speonk.

Bus service in the Town is not extensive and covers relatively little area. One route runs from the Village of Southampton to Sag Harbor, making stops at points between. A second route runs between East Hampton and Bridgehampton.

Three airports are accessible to the Town's residents, although only one is located in the Town. The Suffolk County airport is located in Westhampton, and the East Hampton and Spadaro Airports are located in the Town of East Hampton and Brookhaven, respectively.

4.6.5 Social Services

The Town does not have a municipal fire department. All fire protection within the Town is provided on a volunteer basis. A number of villages and hamlets are equipped with the proper equipment and facilities to handle fire events. Those communities that do not have their own fire fighting equipment are part of a fire protection district. Based on geographic location, an equipped firehouse is responsible for fire protection within a surrounding area.

The Town has its own police department with other departments found in the individual villages. A State Police barrack also exists in the Town.

Southampton Hospital is the only hospital within the Town. If further care is necessary, Central Suffolk Hospital in Riverhead is utilized.

4.7 BIOLOGICAL RESOURCES

4.7.1 Wildlife

As described in the Town's Master Plan, 1970, the Town contains a wide variety of interdependent ecosystems that provide a habitat for a multiplicity of flora and fauna. The discussions that follow describe the ecosystems as associations related to either the marine or upland environment and are excerpted from the Town's Master Plan.

Marine Environment

The shallow waters of the bays and estuaries surrounding the Town provide food sources for crustaceans, juvenile finfish, and other sea life. Larger finfish such as the mackeral, menhaden and herring also feed in these shallow waters. Numerous egrets, herons and other wading birds and shore birds nest along the fringes of these coastal waters.

The marine environment is also important for another reason. Aerial counts by the U.S. Department of the Interior, New York State Department of Environmental Conservation (NYSDEC), and special annual Christmas counts by the latter agency and interested citizens indicate that large numbers of waterfowl frequent marine communities in Southampton during their migration. The Town lies in the path of the Atlantic Coastal waterfowl fly-way. As a result, many waterfowl spend their winters in the Long Island area and it is considered one of the most important waterfowl areas in the North Atlantic States. The mild winters often keep the waters clear of freeze-ups, thereby enabling the waterfowl to obtain food.

Upland Environment

The upland environment is also a highly productive and rich ecosystem. Many species of upland fauna are found within the Town of Southampton. The largest, the deer, ranges widely throughout the community but prefers those areas adjacent to agricultural areas. Deer do not tend to favor the undeveloped moraine found in the western portion of Town. The generally poor soils of this area produce little in the way of food. For this same reason other animals, such as the rabbit and fox, also prefer the dense, rich cover of the outwash plain to the east of the Shinnecock Canal. Raccoon and muskrat prefer an environment which

includes marshlands. Accordingly, these animals are found in the coastal lowlands and inland swamps.

Bird species are also abundant in the Town. Pheasant and quail are found in coastal areas. Pheasant are particularly plentiful as several gun clubs release them annually. Waterfowl are abundant in both the coastal areas and inland ponds.

A listing of songbirds sighted in the community, prepared by the Quogue Wildlife refuge, includes nearly 100 different species that are known to occur within the Town.

4.7.2 Vegetation

As described in the Town of Southampton Master Plan (1970), the Conservation Advisory Council of the Town of Southampton, utilizing the services of several professionals associated with Southampton College, divided the vegetation of the Town into 17 associations. These associations, as listed in the Master Plan are as follows:

1. Old Field Succession

   Pioneer Cedar-Red Cedar (Juniperus virginians), briars (Rubus spp.) old field open land succession to immature oak-pine forest.

2. Fresh Water Marsh

   Cattail marsh community; bulrush (Scirpus spp. indicator plant for the community) also several reeds (Phragmites spp.), duckweed (Lemna minor), leatherleaf (Chamaedaphne calyculate, rarely on Long Island), a few willows (Salix spp.), alder (Alnus), sedges (Carex spp.), shadbush (Amelanchier spp.), sweet pepper bush (Clethra alnifolia), and others; quite distinct ecologically from brackish or salt water marshes, and limited to areas of fresh surface water.

3. Salt Marsh

   Cord grass (Spartina alterniflora), salt-meadow grass (Spartina patens - an especially good indicator of undisturbed marsh conditions where fill has not been deposited), also sea lavender (Limonium spp.), marsh elder (Iva frutescens), fireweed (Erechtites spp.), mallow (Hibiscus spp.), groundsel bush (Baccharis halimifolia).

4. Scrub Land - Brush and Trees

Includes numerous different associations, all of which share the common factor of immature development, having grown in recently after fire and various continuing man-caused disturbances, etc.

5. Dune Strand

Standard indicators of this community on eastern Long Island are beach grass (Ammophila breviligulata), beach pea (Lathyrus maritimus), beach plum (Prunus maritima), bayberry (Myrica pennsylvanica); also commonly includes bearberry (Arctostaphyls uva-ursi), several spurges (Euphorbia spp.), roses (Rosa spp.), and various stunted woody tree species, stunted severely due to the poor environmental conditions (little or no true soil, excessive drought, high winds, salt spray, instability of the surface, etc.).

6. Farm Land - Pasture

In any given year this land may lie fallow, or may be covered with potatoes, cauliflower, several vegetables, rye-grass, wheat, etc., or with pasture grasses of several types.

7. Incorporated Villages and Towns

Vegetative cover varies greatly from absent to fairly dense growth, and includes many of the other associations mentioned; most east-end villages do, however, have mature woody vegetation even in downtown business districts (except where Dutch Elm disease and other infections have encroached on this tree cover).

8. Golf Courses, Airfields, Sanitary Landfills, etc.

In the town, golf course cover runs the gamut from small barrens (sand traps, etc.) to excessively thick and luxuriant cover (esp. in low-lying marshy sections); most such acreage, of course, is covered by a very rich and absorbent grass sod; sanitary landfill areas generally are completely barren.

9. Shinnecock Hills Vegetation

Fire history, scrubby growth, heath-like vegetation and stunted trees dependent on fairly common burning for its continuation. Somewhat more open than pine barrens, with "bare" patches of heath and mosses, and some open sandy barrens, but individual trees sometimes greater in height but with less size uniformity than their pine barren counterparts; common species includes black oak (Quercus velutina), post oak (Quercus stellata), some sassafras (Sassafras albidum), wild black cherry (Prunus serotina), other oaks, hickories (Carya spp.), and the almost

universally common pitch pine (Pinus rigida). Blueberry (Vaccinimum spp.) and cat briar (Smilax) are the dominant shrubs. Pioneer situations include bearberry. From both a botanical and geological point of view, the Shinnecock Hills are considered by some experts to be without counterpart elsewhere.

10. Pine Lands

A rather uniform association in both physical appearance and species composition, with pitch pine (Pinus rigida) and scrub forms of bear oak (Quercus ilicifolia) being by far the dominant species; other common species would include large-toothed aspen (Populus grandidentata), and red cedar (Juniperus virginiana - most in old fields), originally some white pine (Pinus strobus, not quite rare here.).

11. Established Housing

Characteristically has mature cover of numerous different tree, shrub, and herb ornaments, with American Elm (Ulmus americana), maples and several spruces (Picea spp.) being perhaps most common; this varies greatly with the changing characteristics of the local areas.

12. Swamp and Lowland Forest

A broad category, mostly involving fresh water conditions (or with ground water close to the surface), red maple (Acer rubrum) red oak (Quercus rubra), sour gum (Nyssa sylvatics), occasional white pine (Pinus strobus) and, decreasingly on Long Island, American holly (Illex opaca).

13. Scrub Pine and Pioneer Cedar

A somewhat older, more advanced stage of the pioneer cedar mentioned earlier (see item 1).

14. Mixed Hardwood - Forest

Perhaps the richest forest vegetation on Long Island, featuring American beech (Fagus grandifolia) and white oak (Quercus alba), and also mature America elm (Ulmus americana), black walnut (Juglans nigra) sweet birch (Betula lenta), dogwood (Cornus florida), red maple (Acer rubra), sweet gum (Liquidambar styrociflua), tupelo (Nyssa sylvatica), yellow poplar (Liiodendron tulipifera), white ash (Fraxinus americana), white pine (Pinus strobus), and many others, including several species of fern (Dryopteris spp. and others). It can be seen that these species constitute some of the most commercially valuable hardwoods in North America.

15. Oak-Pine

A fairly uniform environment demonstrating somewhat of a balance between these two dominant types, with few other woody species to be found.

16. White Cedar Swamp

Tendency to relatively "pure" stands in early stages dominated by Atlantic or northern white cedar (Chamaecyparis thyoides) - only in fresh water swampy habitat, early stage developing eventually into a more mixed community.

17. New Housing

Mostly raw land, recently graded with raw soil or immature sod and tree vegetation development. Large areas of paved and roofed land as well as newly constructed cesspools.

4.7.3 Threatened and Endangered Species and Species of Special Concern

The State of New York currently lists 34 species of endangered animals, and 18 species of threatened animals. The State, through the New York Natural Heritage Program, has recently designated 89 species of endangered plants and 79 species of threatened plants. Endangered species are any native species in imminent danger of extinction within New York State. Threatened species are any native animal or plant species likely to become an endangered species within the foreseeable future throughout all or a significant portion of their habitat range. In addition, any species listed as endangered or threatened by the United State Department of Interior, as enumerated in 50 CFR 17.11, are included in the New York State listings.

The New York State Environmental Conservation Law, Section 11-0535 (Endangered and Threatened Species), provides legal protection for all listed endangered and threatened species. The taking, importation, possession or sale of any endangered or threatened species of fish, shellfish, crustacea, wildlife or hides thereof, or the sale or possession with intent to sell any article made in whole or part from the skin, hide or other parts of any endangered or threatened species is prohibited, except under license or permit from NYSDEC. In addition to endangered and threatened listings, New York State has a listing entitled "Species of

Special Concern". This category includes those native species which are not yet recognized as endangered or threatened, but for which documented concern exists for their continued welfare in New York State. It is possible that these species could become threatened or endangered in the near future. Thus, these species are more closely monitored than non-classified animals. Unlike the endangered and threatened categories, species of special concern receive no legal protection under the Environmental Conservation Law, Section 11-0535. A listing of endangered and threatened species and species of special concern are provided in Appendix C. A list of species that may occur within the Town includes, but is not limited to, the following species.

- Northern Harrier
- Tiger Salamander
- Roseate Tern
- Least Tern
- Common Tern

Other highly mobile species such as the bald eagle may also occasionally be sighted within the Town.

4.7.4 Wetlands

The Town supports numerous areas of both fresh water and tidal wetlands. Wetland areas are a valuable natural habitat and provide benefits such as open space, storm and flood water control, education and research areas, fisheries habitat, water supply purification, wildlife habitats and recreational opportunities. Depending upon their size and relative ecological value, wetland areas are designated and protected by State and federal agencies through permit requirements for dredge and fill activities.

4.7.5 Significant Habitats

The Town's rich diversity of flora and fauna contains 28 areas that have been designated by NYSDEC as significant habitats.

Significant habitats are defined by NYSDEC as a specific place, area, or location in New York State that has a value for fish or wildlife extending beyond its own border. Table 4-2 contains a listing of these significant habitat areas. Development in an area that is designated as

TABLE 4-2

TOWN OF SOUTHAMPTON
SIGNIFICANT HABITATS

Name of Area	Type of Area
Great Peconic Bay	Waterfowl Wintering Area
Flanders Gun Club	Tern Nesting Area
Noyack Bay	Waterfowl Wintering Area
Mecox Bay	Waterfowl Wintering Area
Long Island Dwarf Pine Plains	Rare/Unusual Plant Habitat
Maple Swamp-Birch Creek	Wildlife Observation Area
North Sea Harbor (Conscience Point)	Tern Nesting Area
Alewife Creek/Big Fresh Pond	Fish Spawning Area
Mecox Inlet	Tern Nesting Area
Lanes Island	Black Skimmer Nesting Area
Moriches Bay	Protected Coastal Bay
Shinnecock Bay	Protected Coastal Bay
West Pond (Seatuck Creek)	Waterfowl Wintering Area
Quontuck Creek Quogue Refuge	Tidal Creek
Sebonac Neck	Tern Nesting Area
Agawam Lake	Waterfowl Wintering Area
Cow Neck	Tern Nesting Area
Alewife Creek/Big Fresh Pond	Warmwater Fisheries
Sagaponack Inlet	Tern Nesting Area
Fairfield Pond Beaches	Tern Nesting Area
Iron Point	Mud Turtle Habitat
Flanders Bay Wetlands	Tern Nesting Area
Cedar Point County Park	Tern Nesting Area
North Haven Woodlands	Hardwood Forest
Manorville-Riverhead Pine Barrens	Pine Barrens
Peconic River and Drainage	Freshwater River
RCA Bog Ponds	Tiger Salamander Pond
Camp's Pond	Tiger Salamander Pond

Source: NYSDEC, 1989b.

a significant habitat is regulated by NYSDEC through permit requirements for the taking of endangered or threatened species.

4.8 CULTURAL RESOURCES

4.8.1 Historic and Archaeologic Sites

There are several historic and archaeologic districts, sites, buildings and structures scattered throughout the Town. Sites listed on the National Registry of Historic Places are recorded on Table 4-3.

Detailed cultural resource surveys involving two stages of investigation are required if an archaeological or historic site is included within a proposed project area. The first stage entails a literature review detailing the history, prehistory and architecture of the proposed project area and a synopsis of the direct impacts surrounding facility construction and implementation. The objective of this stage is to identify specific cultural resources located in the project area and assess the possibility of unrecorded resources. Should a literature survey indicate that cultural resources exist in the project area, the investigation will progress into the second stage. This usually involves subsurface excavations to determine whether the recorded resource sites are intact or no longer remain. If the site is indeed intact, a survey must be undertaken to collect all relevant data for the EPA, with the guidance of the State Historic Preservation Officer (SHPO), to determine eligibility, using the National Register criteria. If the property is eligible for inclusion on the National Registry, the impacts of project construction and implementation must be evaluated by the EPA and SHPO. If unrecorded resources are found during construction, site activities will have to be halted until appropriate investigations are conducted.

4.8.2 Parks and Recreational Areas

The Town has set aside numerous areas for both active and passive recreation. Beaches along both the northern and southern shores of the Town are maintained for residents and visitors enjoyment. Greenbelt areas such as Long Pond Greenbelt and areas set aside for conservation such as the Quogue Wildlife refuge are also available for enjoyment of the natural

beauty of Southampton. Golf courses and parks with ball fields, par courses, and other amenities are located throughout the Town.

Libraries are located in the Villages of Bridgehampton, Hampton Bay, Quogue, Southampton, and Westhampton. A number of local newspapers are published on a weekly basis. A variety of cultural activities including theatre, musical performances and arts and crafts fairs are presented throughout the Town.

TABLE 4-3

MALCOLM PIRNIE

TOWN OF SOUTHAMPTON[1]
HISTORIC SITES

Beebe Windmill
Ocean Road and Hildredth Avenue
12/27/78

James Benjamin Homestead
1182 Flanders Road
8/13/86

Custom House
Garden Street
(part of Sag Harbor Village Historic District)
7/20/73

Jerald Wade House
Madison Street
(part of Sag Harbor Village Historic District)
7/20/73

John Jermain Library
Main Street
(part of Sag Harbor Village Historic District)
7/20/73

Methodist Church
(part of Sag Harbor Village Historic District)
Madison Street
7/20/73

Municipal Building
(part of Sag Harbor Village Historic District)
Madison Street
7/20/73

James L. Breese House
155 Hill Street and Halsey Lane
4/18/80

Mercator Cooper House
81 Windmill Lane
(part of Southampton Village Multiple Resource Area)
10/2/86

The Water Mill Museum
Old Mill Road
10/13/83

Jagger House
Old Montauk Highway
12/12/78

Sag Habor Village Historic District
Main Street, Madison Street, Union Street, and Garden Street
7/20/73

Sag Harbor Whaling and Historical Museum
Main Street
(part of Sag Habor Village Historic District)
7/20/73

Whaler's First Presbyterian Church
Union Street
(part of Sag Harbor Village Historic District)
7/20/73

William Merritt Chase Homestead
Canoe Place Road and Bathing Beach Road
6/19/83

Balcastle
Northwest corner of Herrick Road and Little Plains Road
(part of Southampton Village Multiple Resource Area)
10/2/86

Beach Road Historic Area
(part of Southampton Village Multiple Resource Area)
10/2/86

Dr. Wesley Bowers House
Beach Road
(part of Southampton Village Multiple Resource Area)
10/2/86

Mansard Inn
300 Hampton Road
(part of Southampton Village Multiple Resource Area)
10/2/86

North Main Street Historic Area
(part of Southampton Village Multiple Resource Area)
10/2/86

Windmill at Water Mill
Route 27 and Halsey Lane
12/27/78

Crowther House
97 Beach Lane
3/21/85

Source: Spinoza, 1988.

Notes: (1) Date Listed on National Register

4.0R ENVIRONMENTAL SETTING

The existing environmental setting for the Town of Southampton, including topography, hydrogeology, water and air quality, socio-economic conditions, biological resources and cultural resources remains unchanged.

5.0 INTEGRATED WASTE MANAGEMENT CONCEPTS

5.1 OVERVIEW OF FACILITY PROCESSING NEEDS

A key element in the development of a comprehensive solid waste management program for the Town is the identification of appropriate technologies for the processing and disposal of solid waste.

The basic objective of this technology evaluation is to assist the Town in developing a long-term solid waste management program, however, this evaluation must also be responsive to the solid waste management hierarchy described by NYSDEC in the New York State Solid Waste Management Plan. This hierarchy establishes the following order of preference:

- First, reduce the amount of solid waste generated
- Second, reuse materials for their original purpose or recycle materials that cannot be reused
- Third, recover, in an environmentally acceptable manner, energy from solid waste which cannot be economically and technically reused or recycled
- Fourth, dispose of solid waste that is not being reused, recycled or from which energy is not recovered, by landfilling or other methods approved by the NYSDEC.

This hierarchy is consistent with the NYSDEC philosophy of giving priority to waste reduction, recycling and reuse, while minimizing the disposal of unprocessed solid waste in landfills.

In addition, the State policy further indicates that the State must contribute to solid waste management by providing programs which promote waste reduction and the expansion of markets for recycled materials. In conjunction with waste reduction measures, the development and implementation of aggressive recycling programs are targeted to meet the State goal of 50 percent recycling of the waste stream by 1997.

In preparing this Draft GEIS, the Town has focused on its own needs, while maintaining an awareness of the plans and progress of the neighboring towns. At this time, there are no concrete plans to develop a multi-town plan. However, there are two multi-town approaches that are in their early planning stages which the Town is currently keeping an eye on. One

program initiated by the E2RA organization considers processing and marketing recyclables for a multi-town area, and the other program currently contemplated by Brookhaven might offer a regional MRF as well as a regional mixed waste processing facility. These alternatives that would be available if a multi-town approach were adopted are described in Sections 6.3 and 7.3.8.

A primary objective of the technology evaluation is to select technologies that are compatible with the Town's proposed recycling programs and that can provide reliable, environmentally acceptable, and economically feasible solid waste processing and disposal services for that portion of the Town's solid waste stream that may not be recyclable.

For the purpose of conducting the technology evaluation, the solid waste stream has been divided into three segments according to how the waste stream will likely be processed. The segments which need to be considered when developing and sizing an integrated waste management program are:

- source separated recyclable materials
- mixed waste that will not be source separated
- residual waste that will remain after processing

Figure 5-1 illustrates the Town's projected future annual average waste stream and its individual segments through the year 2015. The waste quantities for 2015 were estimated by extrapolating the existing data used to estimate the projected waste quantities through 2010. As previously stated in Section 3.3.1.3, Projected Solid Waste Quantities, the total waste stream is expected to increase approximately 840 tons each year through 2015. Also, recycling activities in 1988 resulted in the recovery and marketing of 2,234 tons excluding separated organics (about 3 percent of the total waste stream). However, the Town must plan on a recycling goal of at least 40 percent of the total waste stream through its source separation program by 1997 in accordance with the goals of the NYSSWMP. To accomplish this goal, a very aggressive recycling program will be needed and the actual quantity of materials that will be recycled will depend on numerous feasibility factors discussed in Section 6.1 which could result in either more or less recycling at any given time. From

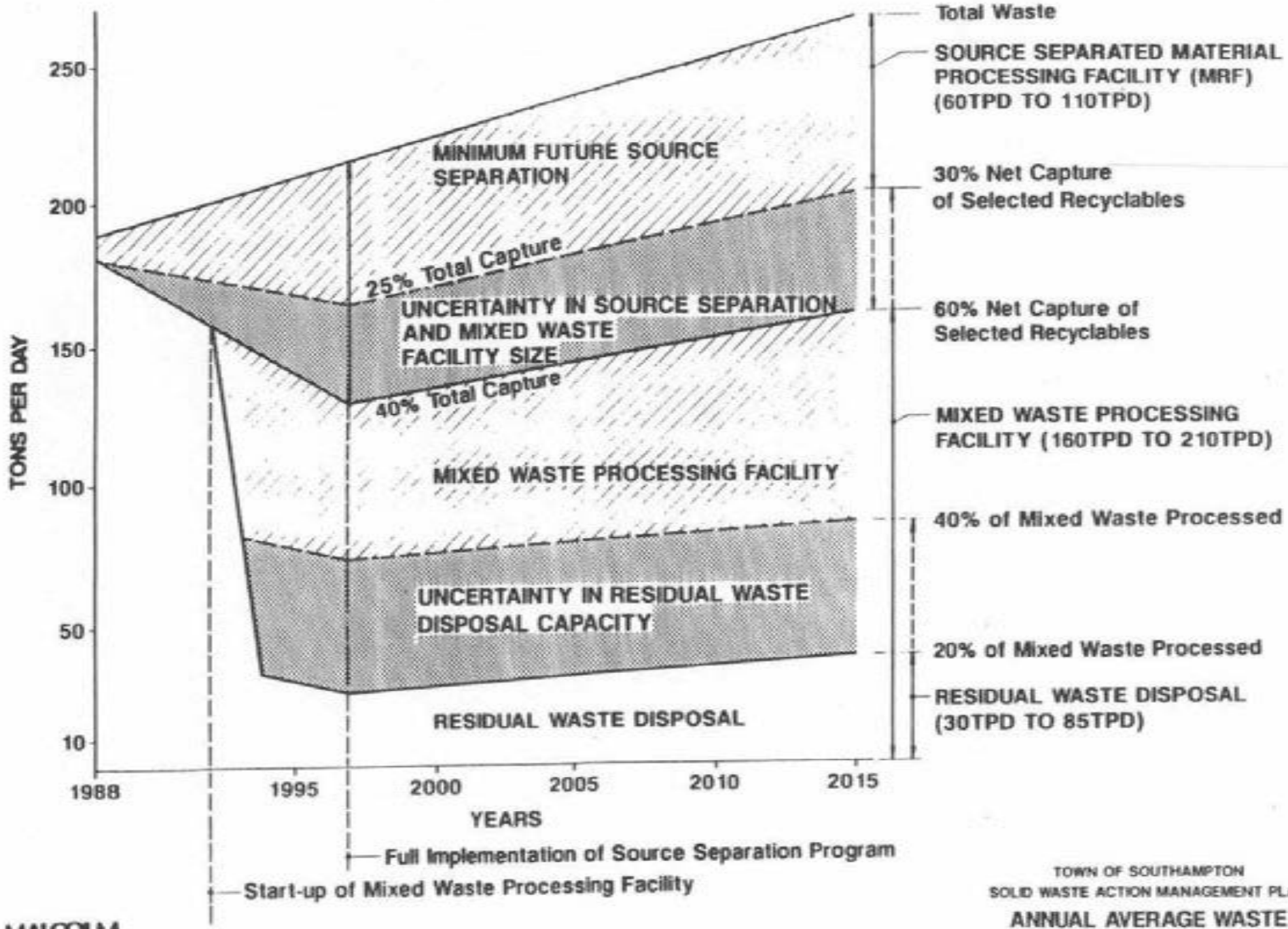

TOWN OF SOUTHAMPTON
SOLID WASTE ACTION MANAGEMENT PLAN

ANNUAL AVERAGE WASTE STREAM SEGMENTS

FIGURE 6-1

MALCOLM PIRNIE

Table 3-17, it is noted that approximately a 40 percent recycling goal could be met by capturing approximately 60 percent of the selected "hard" recyclables and yard waste, and 100 percent of all organic and other materials separately delivered to the Landfill, if this is possible.

However, since even a 60 percent net capture rate of these materials will be difficult to obtain, as previously discussed, there is uncertainty involved when projecting future source separation rates; particularly with respect to the timing and maturation of the source separation programs. Thus, Figure 5-1 indicates a band of uncertainty with respect to source separated material quantities, which will directly affect the remaining mixed solid waste quantities.

The remaining mixed waste (after source separation) will be processed by the selected mixed waste processing technology. Depending on the technology selected and its processing efficiency, there will also be an uncertain quantity of residual waste remaining after the mixed waste is processed. This remaining residual waste will subsequently be landfilled.

The facilities that will process source separated materials and mixed waste must be sized according to the quantity of material each system will be required to process, and must allow for the seasonal variations of the Town's waste stream.

Due to the uncertainty of net capture rate of recyclables (see Section 3.3.3.3) in a given time frame, it is estimated that the average annual amounts of source separated materials could range from 45 tpd to 85 tpd in 1997 and from 55 tpd to 105 tpd in 2015. The remaining amount of mixed solid waste to be processed could range from 130 tpd to 170 tpd in 1997 and from 160 tpd to 210 tpd in 2015 on an annual average basis. Depending on the selected mixed waste processing technology, the resulting residual waste after processing could range from 25 tpd to 50 tpd in 1997 and from 30 tpd to 65 tpd in 2015 on an annual average basis. This residual waste will likely be disposed at future cells at the existing North Sea Landfill.

An examination of the seasonal variations of the total waste stream (see Figure 3-1) indicates a maximum and minimum variation of approximately 2:1. This suggests the feasibility of designing a solid waste processing facility for a single-shift operation which would handle the

winter needs and a two-shift operation for the summer peak requirements. Therefore, an extra shift would be available for facility maintenance requirements, which is the minimum required reserve capacity, based on experience in many operating facilities with front end processing systems.

5.2 PHASED SIZING AND CONSTRUCTION OF FACILITIES

The sizing of a facility is affected by a number of considerations including:

- The average quantity (tons per day) and composition of MSW received over an extended time period.
- The range (maximum and minimum tons per day) and composition of MSW received over a shorter time period (one month, one week, and peak days).
- Anticipated increase in MSW received over the planning period.
- Source separation program diversion rate.
- Preferred solid waste management technologies.
- The size of the markets for recycled materials, energy, compost materials, and available land for landfill.
- The type or types of waste handling and processing facilities selected.

The recommended facilities will likely include a MRF with source separation of materials, a central mixed waste processing facility (e.g., RDF, composting, or any combination thereof), and a leaf and yard waste composting facility. The interrelationship among these facilities will dictate the size required for each. For example, if source separation results in recovery of significant waste quantities, the central mixed waste processing facility could be smaller than if less source separated materials are recovered. Accordingly, the sizing of a mixed waste facility is quite dependent on the Town's ability to achieve or not achieve various waste quantity reductions through source separation recycling.

Although Figure 5-1 shows the projected annual average waste stream through 2015, the Town cannot confidently plan and size the processing facilities based on waste stream estimates in 2015 at this time, particularly in light of the uncertainties discussed. When considering planning and sizing estimates for the next 25 years, there are many unknowns and uncertainties associated with waste generation rates, net recycling capture rates, and solid waste disposal requirements. Moreover, if the midpoint of the planning period (2003) is used as a reasonable year for facility sizing purposes, it is apparent from Figure 5-1 that additional waste processing capacity may not be needed, even by the year 2015, if a 60 percent net capture of recyclables can be achieved. Furthermore, since planning for processing facilities can include room for future expansion, we believe that a significant initial cost savings can be realized by considering building smaller facilities at the start. This will also provide flexibility in the event that waste reduction or more recycling is accomplished.

Therefore, although the mixed waste processing facility will most likely be sized to handle the waste load expected in the year 2003, it will be designed with the flexibility to increase its processing capacity if future data indicates that this would be necessary. Thus, if the waste stream data 10 years from now indicates that a larger processing capacity is required, the facility's capacity could be increased, and provisions for sufficient site area and Landfill capacity will be available to make the sizing adjustments as needed.

This data and the relationship between waste stream growth and potential recycling rates over time illustrated in Figure 5-1, are the basis upon which the selection of appropriate facilities for processing of both recyclables and mixed waste can be made. Table 5-1 summarizes projected MSW throughput quantities that would be processed by a mixed waste processing facility under two scenarios (30 to 60 percent net recyclables capture) for the year 1988, 2003, and 2015. These MSW throughputs are based on the projected total MSW stream from Figure 5-1 and the projected recyclables net capture rates from Table 3-17.

The quantities of captured recyclables in Table 5-1 were projected by applying the indicated percentages (30 or 60 percent) to theoretical recyclables quantities and adding in organic and other materials actually diverted for 1988 (see Table 3-17) for the projected total waste streams (Figure 5-1) in 2003 and 2015. Due to the 2:1 seasonal variation of the Town's annual waste stream, the seasonal lows and highs were determined by decreasing and increasing, respectively, the annual averages from Figure 5-1 and Table 3-17 by 50 percent in both cases.

It appears from Table 5-1 that a mixed waste facility could potentially be sized to process between 115 to 230 tpd of MSW throughput based on the design year (2003) and the 30 percent net capture rate scenario. This size range seems to be reasonable since it is similar to the resulting throughput range in the year 2015 when a more mature and developed mandatory recycling program would be underway (i.e., 60 percent net capture rate scenario). Although this facility size range would not be sufficient to process the total waste stream in 1988, it is expected that the current source separation program would divert a sufficient portion of the waste stream when the mixed waste processing facility becomes operational. See Section 9.2.1 for a further discussion of facility sizing.

It is also useful to note that since the economics of facility size are somewhat interdependent between recyclables and mixed waste processing, that flexibility to make changes and adjustments, in the event that more or less tonnage is received, is a key to selecting the size as well as the type of system to be used. If, for example, the Town could be assured that the recycling program would capture more materials in the early years, then the mixed waste facility could be smaller and less costly.

5.3 IMPACTS OF RECYCLING ON MIXED WASTE PROCESSING

In addition to overall changes in waste quantities, removal of certain materials for recycling may change the quality of the wastes destined for mixed waste processing. The presence of certain materials that could be removed for recycling may interfere with processing

TABLE 5-1

TOWN OF SOUTHAMPTON
PROJECTED MSW THROUGHPUT

	1988		2003		2015	
	Seasonal Low (tpd)	Seasonal High (tpd)	Seasonal Low (tpd)	Seasonal High (tpd)	Seasonal Low (tpd)	Seasonal High (tpd)
Total MSW Generated(1)	125	250	155	310	180	360
Recyclables Captured Under 30% Net Capture Scenario(2)	30	60	39	78	45	90
Remaining MSW for Processing (30% Net Capture Scenario)(3)	95	190	116	232	135	270
Recyclables Captured Under 60% Net Capture Scenario(4)	48	96	60	120	71	142
Remaining MSW for Processing(3) (60% Net Capture Scenario)	77	154	95	190	109	218

Notes:

(1) Seasonal values are based on 50% above and below projected total waste values in Figure 5-1.
(2) Seasonal values are based on 50% above and below 30% net capture of selected recyclables plus all organics and other materials actually diverted as shown in Table 3-15. Values in Table 3-15 have been projected for years 2003 and 2015.
(3) Remaining waste after captured recyclables are subtracted from the total MSW generated.
(4) Seasonal values are based on 50% above and below 60% net capture of selected recyclables plus all organics and other materials actually diverted as shown in Table 3-15. Values in Table 3-15 have been projected for years 2003 and 2015.

operations, effect the quality of products such as compost or impact air, water and solid waste pollutant levels. These impacts depend on two factors:

- the effect of recyclables removal on the quality of the remaining waste, and
- the type of mixed waste processing system that is implemented.

5.3.1 Remaining Wastes after Recycling

The qualities of the waste stream remaining after recyclables removal are determined by the quantity and type of material removed.

Recyclables may be removed from the waste stream prior to processing in two ways: 1) through source separation or 2) front-end processing (see Section 7.1.1 of this report). Also, recyclables may be removed after processing, typically by screening or magnetic separation of the process output.

As Table 5-1 shows, predicting actual removal rates of specific materials is uncertain at this time. Section 3.3.3.3 of this report describes the numerous factors that will effect source separation capture rates. Thus, although the Town may set a goal for source separation, actual recovery rates for specific materials in the future is too uncertain at this time to make a determinative judgement as to the quality of the remaining wastes after recyclables separation. Also, front-end processing and post process removal rates will depend on the specific processing system implemented by the Town or the Regional approach taken by E2RA.

5.3.2 Process Specific Impacts

A qualitative change in the waste stream due to recyclables removal will have different implications for different processing technologies. The presence or absence of certain wastes will effect composting in different ways than waste to energy. Impacts will be discussed for these two general technological waste processing areas that are being considered by the Town. Detailed impacts analysis will depend on the specific system implemented and the quality of the waste remaining after recyclables removal.

5.3.2.1 Impacts on MSW Composting

Several benefits can inure to MSW composting from the presorting of recyclables. Many potentially recyclable materials are undesirable for composting since they do not decompose, or they may contain toxics or heavy metals. Little information is available on the impacts of specific materials present in a composted waste stream. However, in West Germany, some programs have added source separation and mechanical pre-processing before composting MSW to deal with these problems. These presorting programs have been successful in mitigating problems posed by materials that are undesirable for composting.

Some materials that do not decompose: glass, metals and plastics, pass through the compost process in their original form and may become part of the compost product. The presence of these materials in the product may increase average particle size and subtract from the appearance of the compost. This can limit the number of uses for the compost and may make marketing difficult. Also, depending on the composting system used, these materials may interfere with mechanical operations of screening, mixing, shredding and conveying equipment.

Pre-separation may significantly reduce heavy metal levels in the compost product. Heavy metal levels may be determinative of the uses for the compost product and effect the products marketability. Heavy metals may be found in plastics, metals, waste paper, glass and batteries.

In West Germany, several programs adapted a three container source separation system with favorable results after high concentrations of heavy metals and other undesirable materials were experienced in the mixed MSW compost end product.

Pre-separation can reduce the need for extensive and expensive post-processing of the compost product. Briefly, post-processing removes some undesirable substances in the compost product (see Section 7.1.2 in this report for further details). Screening, magnetic removal of metals and air classification may be needed to make the compost a safe and marketable product. Post processing is not 100 percent effective and cannot remove certain substances such as heavy metals. Effective pre-separation may partially or wholly eliminate the need for post-processing.

It is apparent from these findings that, should the Town select composting as its mixed waste processing system, impacts on the composting process are likely to be favorable and are a consideration for developing the source separation program.

5.3.2.2 Impacts on Waste to Energy

Presorting recyclables prior to incineration in a waste to energy facility (WTEF) may have several impacts on the combustion process, air emissions, ash generation and ash quality. Studies of these impacts indicate generally beneficial impacts. However, the few studies that have been done typically have not identified the relationship of specific materials with specific impacts.

Several potential impacts on facility operations have been identified. Lower furnace grate maintenance costs may be realized since some materials that damage the grates would be removed and a more homogenous burn rate across the grate will result. The total amount of energy in each ton of waste may change with the removal of certain materials. The amount of total energy in each ton of waste is one factor that can affect the design and electricity production of the WTEF.

The energy content of waste is often stated in terms of its higher heating value (HHV). The effect that recyclables removal has on the average HHV of fired waste can be estimated by adjusting the HHV of delivered waste to account for the HHV of recovered recyclable materials. At this time, this estimate cannot be accurately calculated since the removal rate of specific materials is not known (see Section 5.3.1). However, Malcolm Pirnie has estimated this change for other projects and has found that, depending on materials removed, the effect of recycling on HHV is typically negligable or results in an increase in the average HHV of waste fired in the mass-burn units.

An increase in HHV would proportionally reduce the throughput capacity of mass-burn units in terms of tons per hour. However, this impact may be more than offset by a reduction in total energy supplied as fuel to the mass-burn units as a result of an overall decrease by weight of the incoming waste to be burned.

The increase in HHV of the waste could also result in an increase of boiler thermal efficiency (due to lower moisture content and lower excess air requirements). This is particularly true when yard wastes, manure and other separated organics are removed which have a high moisture content. Increased boiler thermal efficiency would increase the electricity production rate of the facility in terms of kilowatt hours per ton of waste fired. Calculating the actual net effect source separation has on electricity production would require more detailed analysis, which is beyond the scope of this report.

It has been found that, depending on the quantity and kind of material removed, recyclables removal may also reduce the amount of ash generated. Ash generation is reduced by removing a portion of the total waste quantity destined for the WTEF and by removing non-combustible materials such as glass and metal which pass-through the process and make up a large portion of the ash.

Impacts on ash quality may also be realized. Ash quality is usually defined in terms of the quality of leachate from the ash. In other words, when ash is disposed of in a landfill or reused, what is the quality of water after is passes through the ash? Poor quality leachate can contaminate surface or ground water sources unless properly contained and disposed. Potentially leachable heavy metals may be removed from the ash by removing materials such as plastics, metal, waste paper and batteries prior to incineration. Ash heavy metals have been reduced by presorting recyclables, but whether this reduction is in leachable heavy metals has not been determined.

Air emissions may also be reduced. Reductions in air emissions that have been postulated or demonstrated include emissions of carbon monoxide, carbon dioxide, hydrocarbon, non-methane hydrocarbon (that could help reduce furan and dioxin emissions), acid gas, oxides of nitrogen, chlorinated organics, fluoride and heavy metals (cadmium, lead, nickel and mercury). These reductions are due in part to the overall reduction in the quantity of material incinerated and to the removal of specific materials that contain pollutants.

The EPA recently proposed new air emissions performance standards under the Clean Air Act for new and existing municipal waste combusters. The new standards would include three pre-separation requirements as a best demonstrated technology for air emissions control. These include: 1) 25 percent reduction in waste quantity through source separation, 2) total removal of lead-acid vehicle batteries and 3) development of a program to remove household batteries.

5.0R INTEGRATED WASTE MANAGEMENT CONCEPTS

The purpose of Section 5.0 of the Original SWAMP, Integrated Waste Management Concepts, was to identify appropriate technologies for the processing and disposal of the Town's solid waste. Necessarily, selected technologies must be responsive to the solid waste management hierarchy described by the NYSDEC in the New York State Solid Waste Management Plan. This hierarchy establishes the following order of preference:

- Reduce the amount of solid waste generated.
- Reuse materials for their original purpose or recycle materials that cannot be reused.
- Recover, in an environmentally acceptable manner, energy from solid waste which cannot be economically and technically reused or recycled.
- Dispose of solid waste that is not being reused, recycled or from which energy is not recovered, by landfilling or other methods approved by the NYSDEC.

The Town's proposed refinements to its Original SWAMP are consistent with the State's hierarchy outlined above. Accordingly, since all applicable information has been incorporated into other sections of the Revised SWAMP, Section 5.0 has not been revised. Specifically, Section 6.0R provides information regarding the Town's proposed waste reduction and recycling program, Section 7.0R provides a revised analysis of mixed MSW composting, and Section 9.0R provides an evaluation of several solid waste management program alternative scenarios.

6.0 SOURCE SEPARATED RECYCLABLE MATERIALS PROGRAM

6.1 INTRODUCTION

Source separation recycling will be an integral part of Southampton's solid waste management program. Source separation occurs where the generator of waste (the source) separates waste materials that will be recycled from materials that will be disposed. The recyclables are then collected separately, sorted and packaged (processed) if necessary and marketed for remanufacture. Source separation is viewed as the preferred recycling method since the recyclable material is separated before it can be contaminated through contact with other waste or lost as the result of entrainment.

The Town has recognized that there is an immediate need to reduce the quantity of solid waste disposed at the North Sea Landfill (Landfill). Recycling will not only be an important part of the SWAMP, but also represents an opportunity in which immediate action can be taken that will divert significant quantities of material from the Landfill at potential avoided cost savings.

For several years, the Town of Southampton has conducted a successful voluntary source separation recycling program (see Section 3.2.3). The Town is now in the process of implementing its 1989 Recycling Plan which will significantly improve and expand the Town's recycling activities (see Appendix D, 1989 Recycling Plan). The 1989 Recycling Plan was developed and is being implemented as required by the Consent Order. The improvements for 1989 focus on enacting a mandatory source separation ordinance for newspaper, metal, yard wastes, glass, cardboard and office paper and implementing improvements in local recycling promotion, collection and drop-off centers. All of these improvements are in harmony with the long-term recycling program recommended in this GEIS and will enhance implementation of the long-term plan by establishing the collection infrastructure and a public participation base.

Although certain commercial and industrial recycling activities are currently profit driven, the primary rationale for the Town to recycle is the reduction in waste destined for disposal and the concomitant savings

in the avoided cost of disposal. Avoided cost savings is directly related to the definition of "economic markets" provided in New York State General Municipal Law, Section 120-aa (1988).

That law requires municipalities to enact mandatory source separation ordinances for separation of materials by September 1, 1992 for which "economic markets" exist. Economic markets is defined as, "...instances in which the full avoided costs of proper collection, transportation and disposal of source separated materials are equal to or greater than the cost of collection, transportation and sale of said material less the amount received from the sale of said material." Expressed as a formula, an economic market exists for a material where:

[Recyclables collection cost + Transport to market cost + marketing and any necessary processing cost - revenues] $\leq$ [garbage collection cost + transport to disposal facility cost + cost of disposal]

In general, recycling is economically feasible for Southampton where the total cost associated with recycling a cubic yard is less than the total cost associated with landfilling the same cubic yard.

The avoided disposal cost savings equals the difference between the two costs. At this time, recycling costs and revenues cannot be accurately estimated since too many program issues have not been resolved. On the other hand, it is known that landfilling costs alone, now estimated at about $20 per ton, will soon increase to an estimated $45-55 per ton due to the cost of constructing cell 3 to meet DEC landfill construction regulations, and when considering the cost associated with capping and monitoring that cell when it is closed. Given this increase in cost of disposal, it is apparent that expanded recycling activities may result in some disposal cost savings, depending on market conditions, and will also prolong the life of valuable landfill volume.

The recycling program analysis presented in this section is broken down according to the following program elements:

- Implementation Options
- Public Participation
- Collection Systems

- Materials Marketing
- Processing Technologies
- Environmental Impacts.

For each program element, various alternative implementation approaches are analyzed. There are several courses open to the Town for implementing source separation recycling, since certain implementation issues have not been resolved. As such, Section 9.1, Recycling Program Recommendations, presents the recommended short-term and long-term options developed for each program element out of the analysis presented in this section along with acceptable alternative approaches.

6.2 COMPREHENSIVE RECYCLING ANALYSIS

This Section 6.0 along with other sections in this GEIS and the 1989 Recycling Plan in Appendix D provide a comprehensive recycling analysis. Sections 3.2.3 and 3.2.4, Recycling Programs, provides an evaluation of existing efforts to recover recyclables. Section 3.3.3, Recyclable Materials, identifies the estimated quantities of recyclable materials that are available in the waste stream and quantities that would be recycled at various potential net capture rates.

Section 6.0 identifies and analyzes alternative programs and implementation options available to the Town.

Program recommendations are presented in Section 9.1. The first steps necessary for implementing these recommendations are given in Section 11.1, Recycling Program Implementation, and long-term implementation schedules are presented in Section 11.4.

It should also be noted that the 1989 Recycling Plan, which provides a plan for immediate program improvements, also provides additional background and markets information and is considered an integral part of this GEIS.

6.3 IMPLEMENTATION OPTIONS

While the Town could continue to handle and market its own recyclables, cooperative recyclables processing, marketing or promotional activities undertaken jointly with the five East End Towns and/or with Brookhaven would have significant advantages for the implementation of recycling in Southampton. These advantages are derived primarily from economies of scale arising from joining the individual town programs together and may include improved recyclables marketability, processing cost savings and greater promotional program effectiveness. Other implementation options discussed in this Section include engaging private enterprise to undertake certain recycling activities and initiatives at the County level to form a marketing cooperative and attract new markets to the region. This section will briefly describe the various implementation options, the advantages and disadvantages of each and implications that will need to be addressed.

6.3.1 East End Towns

The governments of the five East End Towns, including East Hampton, Southampton, Riverhead, Southold, and Shelter Island, support a regional approach in solid waste management as a means of increasing recycling and reducing the tonnage of solid waste disposed. These towns have collectively applied for and received a NYSDEC Local Resource Reuse and Recovery Program (LRRRP) grant for $250,000 to pay 75 percent of a regional Recycling Manager's salary and 75 percent of the cost of a promotional campaign aimed at increasing public understanding of recycling and increasing public participation in source separation. In October 1988, Southampton and the other Towns adopted resolutions of commitment to a regional approach to recycling in order to demonstrate support for the cooperative efforts depicted in the LRRRP grant application. In addition to the LRRRP grant and the promotional/educational activities associated with it, the supervisors for the five towns are also discussing a comprehensive cooperative recycling program for the East End including central processing and marketing. The title of "East End Recycling Association" or E2RA has been given to the organization that will

administrate the cooperative program. Table 6-1 compares preliminary estimates of theoretically available recyclables quantities for the region. However, actual net capture rates of materials are expected to be considerably lower than theoretically available quantities as previously discussed in Section 3.3.3.3. Refer to Table 3-18 for estimated regional MRF processing quantities.

The five town cooperative recycling effort has progressed furthest in the area of promotion and education, and it is recognized that promotion and education could be less costly for each municipality if a cooperative effort is pursued since promotional materials would be shared by all of the towns. By sharing budgets, the towns' joint promotional efforts could cultivate stronger campaigns and reach more individuals. This campaign would be more effective as well since there will be greater coverage and residents will see consistent information in their home towns as well as in neighboring towns. For these reasons, a cooperative promotion/education effort could have a greater impact on changing waste disposal recycling habits, particularly over the long-term.

Currently, however, each town has its own unique recycling program. The public needs specific information on how to participate in each of these programs. For the short-term, each town may need to maintain its own promotional activities in addition to an E2RA general recycling education campaign. This is particularly important for Southampton given the Consent Order requirement to initiate town-wide mandatory recycling by the end of 1989 (see Section 3.2.5, Consent Order Requirements). Southampton must take immediate action with or without the other towns to satisfy this requirement.

A cooperative processing approach could also have a number of advantages. Per-ton processing costs may be reduced due to economies of scale resulting from a larger processing facility. Central processing may also improve the marketability of recyclables through greater consistency, larger quantities and possibly higher materials quality (see Section 6.8.3).

As discussed in Section 6.9.1, recyclables (newspaper, glass, cans and plastic) separated from primarily the residential waste stream and commercial/institutional recyclables (cardboard and office paper) are

usually processed in an Materials Recovery Facility (MRF). This processing produces a more marketable material (see Section 6.8, Materials Marketing). It has been proposed that a regional MRF could be constructed on County owned land at the West Hampton Airport (See Section 10.5.1). Although a MRF can be of any size, the equipment for mechanical processing, which produces a more marketable material (see Section 6.9), usually becomes more cost effective when more than a certain quantity passes through the facility.

Existing facilities in North America typically process between 50 and 300 tpd5. (MRFs typically operate during a normal 5 day business week. Therefore tpd is typically described in terms of a five-day week. "Tpd5" means tons per day in a five day week.) Table 6-2 compares estimated MRF potential daily tonnages for Southampton only with combined quantities for the E2RA. Assuming that a net capture rate of 60 percent could be achieved, Southampton alone would generate about 60 tpd5 of materials destined for a MRF on an annual average basis. Certain materials, particularly cardboard and office paper, may be recycled privately and thus may not be processed by a municipal MRF. Without these materials, about 30 tpd5 of newspaper, cans, glass and plastic would be collected at Southampton at a 60 percent capture rate. To our knowledge, there are no programs operating today with a service area comparable to Southampton that have been able to sustain more than a 60 percent net capture for all of these materials, although it is possible that more can be achieved over time. Therefore, it may be reasonable to plan on the potential for achieving about a 60 percent or more net capture rate by 1997, but only if the Town is successful in promoting a very aggressive program. See Section 3.3.3.3 for a discussion of the rationale for net capture rates.

On the other hand, an East End Towns cooperative would be expected to capture about two and one-half times more than Southampton does alone. Assuming a 60 percent capture rate, an E2RA MRF could process about 160 tpd5 when the program matures. Newspaper, cans, glass and plastic alone would amount to about 75 tpd5 with an 60 percent net capture rate. The additional quantity would have a favorable impact through economy of scale on per-ton processing costs, and may improve the economic feasibility of

TABLE 6-1

TOWN OF SOUTHAMPTON
COMPARISON OF ESTIMATED 1988 REGIONAL RECYCLABLES GENERATION[1]

Materials	Southampton Theoretical Generation (tpd)	Other East End Towns[2] Theoretical Generation (tpd)	East End Towns Subtotal (tpd)	Brookhaven Theoretical Generation (tpd)	Total[3] Theoretical Generation (tpd)
Corrugated	29	46	75	195	270
Newspaper	11	17	28	74	102
Glass	13	20	33	87	120
Cans	9	14	23	60	83
Office Paper	10	15	25	64	89
Plastic	2	2	4	10	14
SUBTOTAL	74	114	188	490	678
Source Separated Organics	30	43	71	186	257
White Goods	2	3	5	14	19
Tires	0.4	0.5	1	3	4
TOTAL	104	161	265	693	958

Notes:
(1) Theoretical generation rates for the other East End towns and Brookhaven were estimated by applying percent of total waste stream for each material estimates for Southampton (see Table 3-15) to total solid waste generation quantities for the appropriate municipality(ies) as estimated by the NYSDEC (See quantity information shown for each East End Town on Figure 3-2). Figures are on an annual average basis. Seasonal fluctuations are about a 2:1 ratio for summer to winter.
(2) Includes Riverhead, Southold, East Hampton, and Shelter Island.
(3) Includes quantities from Brookhaven.

MALCOLM PIRNIE

TABLE 6-2

Comparative MRF
Potential Daily Tonnages[1]

	Annual Average Daily Net Capture of Recyclables[4]			
	20%[5] (TPD5)[2]	40%[5] (TPD5)	60%[5] (TPD5)	80%[5] (TPD5)
Southampton	20	40	60	80
E2RA[3]	50	110	160	210

Notes:

(1) These quantities include newspaper, cardboard, glass, cans, office paper and plastic and are based on Table 6-1.

(2) "TPD5" stands for tons per day on a five day business week basis. An MRF is typically sized for 5 days per week operation.

(3) Quantity estimates based on comparison of total waste generation estimates provided in Table 6-1. It is estimated that E2RA generates about 2.5 times as much waste as Southampton does alone.

(4) Seasonal tonnages will vary in approximately a 2:1 ratio, see Table 3-16.

(5) Percent of Recyclables Captured.

purchasing and operating processing equipment that improves materials quality and marketability. Section 6.9.2, Materials Recovery Facility Economics, discusses this question further, and notes the significant impact on costs of the ability to actually receive recyclable materials at a MRF. In order to achieve these net capture rates in a time frame that is consistent with achieving the state goals by 1997, Table 6-3 indicates the percent capture rates that should progressively be achieved to meet the State's 40 percent recycling goal and the resulting tonnages that would be processed in a regional MRF.

A potential problem of a five towns consortium, particularly where it would manage all of the recycling activities for the towns, is the difficulty of reaching a consensus as to administration, budgeting, timing and implementation issues. At this time, each town has its own recycling program. These programs differ in promotion/education, collection, marketing and even which materials are recycled. Most of these programs are continuing to develop independently and some may not become mandatory until 1992. Although these programs could be standardized to the extent required for cooperation at a common MRF, changes in existing programs must be carefully thought out since major program changes tend to have a negative impact on public participation habits.

In addition, considerable time may pass before the E2RA's specific roles are clarified and an organizational structure developed. Thus, it is not certain that the ambitious goals suggested in Table 6-3 can be achieved. Another E2RA formation issue that may pose difficulty is arranging for appropriate funding to be provided by the towns. Development, permitting and construction of a MRF may cost several million dollars and, depending on numerous factors, the operating cost of the facility could be as much as one million dollars per year or more (see Section 9.2.1 for more details and Section 11.4 for scheduling). The LRRRP grant funds can only be used for promotional activities and the recycling manager's salary and after those funds are depleted, a continuing promotion/education budget is necessary as well as a budget for a paid professional staff. Although some of these costs may be off-set by future State grants and materials revenues, the towns would be responsible for initial start-up costs and for assuring program continuation. The E2RA

budget would need approval from all of the governing town boards or from a single-purpose Authority formed to assure this responsibility. The tasks of organizing, funding, and implementing the E2RA initiative will probably take considerable time, effort and cooperation among the town boards.

Alternatively, one town may procure a MRF sized to accommodate recyclables from all five towns. This arrangement could shorten the time needed to arrange for cooperation and speed up procurement. The towns need only provide cooperating agreements to the host municipality consisting of commitments to deliver recyclables collected through municipal programs to the host community MRF for processing and marketing based upon an agreed-upon fee schedule. Again the actual delivered recyclables quantities will determine the cost effectiveness of the MRF and the economic exposure of the host town. These agreements would assure the host community that the proper quantity of material will pass through its facility. Southampton may be the most likely choice for the host community since it is the largest town in the E2RA and since Suffolk County has offered to provide a site at the Westhampton airport located in Southampton for a regional MRF (see Section 10.5.2, Materials Recovery Facility).

6.3.2 Brookhaven Materials Recovery Facility

In May 1989, Brookhaven signed a contract with a vendor for the construction and operation of a MRF in Brookhaven. A Brookhaven Town official reports that, as designed, the facility may have additional capacity over and above what is needed to process the anticipated quantities of recyclables to be collected in Brookhaven, especially in the short term. Brookhaven has expressed interest in discussing the possible use of this additional capacity by Southampton and the other East End Towns for processing their recyclables. This arrangement could have some advantages for the Town, and possibly the region, since Brookhaven is ahead of the E2RA and Southampton in developing processing capabilities. Insufficient information is available at this time to assess the extent to which the Brookhaven MRF can provide for Southampton's processing needs.

MALCOLM PIRNIE

TABLE 6-3

TOWN OF SOUTHAMPTON
POTENTIAL E2RA MRF THROUGH-PUT RANGES TO INCREASE
RECOVERY TO THE GOAL OF 60% NET CAPTURE
5 Day MRF

	Net Capture Rate [1]					
	5%[3]	20%[3]	30%[3]	40%[3]	50%[3]	60%[3]
Year[2]	1988	1990	1992	1994	1996	1998
Southampton	6	20	30	40	50	60
ERA	--[4]	50	80	110	135	160
E2RA Winter	--	35	60	85	95	105
E2RA Summer	--	70	105	135	175	215

Notes:

(1) See Section 3.3.3.3 for an explanation of net capture rate. Based on scale house weigh data for cardboard, newspaper, glass and cans divided by the total theoretically available tonnage of materials destined for a MRF (e.g., the above materials and future office paper and plastics). See Table 3-14 for details.

(2) Although it is likely that increases in net capture rates will be somewhat erratic corresponding with new major recycling activities, progressive yearly increases are shown for comparison purposes.

(3) Percent of recyclables captured.

(4) Unknown at this time.

However, Brookhaven has notified the five East End Towns that they will consider accepting municipal solid waste for composting, recycling and waste to energy. Each Town may or may not reply with a letter of interest. Subsequently, Brookhaven would notify the interested parties by the end of the year of the firm project costs. Thereafter the Towns will have 30 days to notify Brookhaven of their commitment to the project.

The Town anticipates that intermunicipal agreement(s) may be developed if such a course is chosen. Either each of the East End Towns would negotiate the agreement separately or a Regional Authority could be formed to negotiate with Brookhaven.

6.3.3 Southampton Program

Although regional cooperation may be the preferred approach for the general administration of recycling, Southampton will need to implement and administer its recycling program until a cooperative arrangement takes effect. Furthermore, after a regional approach has been effectively implemented, under the aegis of the cooperative entities, Southampton may maintain limited responsibilities in certain areas that can be more effectively and efficiently administered by the town governments. These include control over collection, separated organics composting and promotion and enforcement of local participation requirements. Until E2RA, Brookhaven or the other cooperative actions discussed are in place, the Town will likely need to continue to expand its own program in the most cost effecitve manner. This is particularly true since timing and effective implementation of the cooperative effort is still uncertain.

The Town has begun implementing a plan that will dramatically increase the level of recycling activity. Appendix D is a copy of the 1989 Recycling plan. Under this plan, mandatory source separation, curbside collection and extensive promotion/education have already been or will be initiated by the end of 1989. Also, the drop-off center at the Landfill will be upgraded to an easy access, bi-level design. All of these improvements, as indicated below in this section, are in areas for which Town administration is preferred including enacting mandatory ordinances, collection, and localized promotion and education.

Beyond 1989, Southampton can continue to improve its program independently until E2RA, Brookhaven or other cooperative efforts are effectively implemented, with improvements planned to enhance future cooperative efforts. Expansion activities should be concentrated in areas where it is likely that the Town will have continued responsibility after a cooperative is started. When a cooperative approach is implemented, the Town will have established the localized support infrastructure necessary to compliment a comprehensive cooperative program. In the event that a cooperative approach is only partially implemented, continued independent program development would put Southampton in a position to proceed on its own without having lost time, and the opportunity to divert recyclables from waste disposal during the interim.

Ordinances - It is unlikely that E2RA, Brookhaven or cooperative entity can or will be empowered to enact enforceable recycling laws. Therefore, the Towns will be responsible for implementing mandatory source separation, disposal ban, flow control or anti-scavenging ordinances.

Organics Composting - Given the large area included in the East End Towns and the diversity of solid waste collection methods used, certain recycling program elements lend themselves to local town control. In particular, recyclables collection and separated organics composting may be better administered by the individual towns.

Table 6-4 presents the estimated tonnage and volume of separated organics theoretically available in each of the five towns. The transportion of large volume of source separated organics generated in all five towns to a central composting site would likely be cost prohibitive and market distribution of compost product is best done on a local basis. Alternatively, a few composting sites could be established for organics composting that would be operated by each town or jointly. Since effective organics composting can be carried out using low-capital and low-labor intensive techniques for leaves, centralized composting does not have the economy of scale implications that are realized with a MRF.

Alternatively, if the Town were to incorporate landscaping and brush material in their composting programs then a regional approach as propose by Brookhaven would not be required to process this waste. Considering

MALCOLM PIRNIE

TABLE 6-4

TOWN OF SOUTHAMPTON
EAST END TOWNS
ESTIMATED THEORETICALLY AVAILABLE
SEPARATED ORGANICS GENERATION[1]

	TPD	CYPD[2]	Truck Loads[3] Per Day
Southampton	30	125	8
Riverhead	17	85	6
Southold	13	65	4
East Hampton	11	55	4
Shelter Island	2	10	1
Total	73	340	23

Notes:

(1) Based on estimates presented in Table 6-1, annual average basis. Seasonal variations must be considered for actual daily tonnages.

(2) Assumes material is partially compacted in a truck at an average of 400 lbs/cy.

(3) Assumes an average of 15 cubic yards per truck load (uncomposted).

that the Towns would have to purchase chippers to reduce the size of these larger materials prior to composting.

Collection - Specific knowledge of the demographics and collection practices in each town is important to establishing effective and efficient recyclables collection practices. This is particularly evident where recyclables collection is added to the existing waste collection system. Currently, collection of source separated recyclables in Southampton and the other East End towns is a combination of drop-off by residents and curbside collection by private collection services. A special collection service of recyclables for all residents may be considered, in which case the E2RA via a Regional Authority may contract for the provision of this service for the towns. Although this approach may increase source separation participation to some extent, at this time the additional expense of a special collection service does not appear to be necessary. The resident self-haulers who use the drop-off centers and private collection service companies have been cooperating in the Town's efforts to expand its program, although the addition of multi-material commingled pick-up may increase collection costs. In addition, given the large geographical area that would be included in the multi-town approach, a network of recyclables transfer stations may be necessary to make transport of the material to a central processing facility reasonably cost effective. All of the Towns have already established recycling centers in which materials are stored until sufficient quantity is available for transport to market. The recycling centers are operated by municipal employees and are located at municipally owned waste disposal sites. These existing centers can continue to serve as the collection infrastructure that will feed central cooperative processing facilities.

6.3.4 Private Enterprise

Private firms could potentially take responsibility for some or all of the necessary recycling activities identified in this SWAMP, although contractual commitments from the towns may be necessary for this to be feasible. The extent of private verses public ownership and operation varies along the complete range from fully private to full public control. The typical arrangements are discussed in Section 7.3.3, Procure-

ment Methods. This section concentrates on three implementation approaches in which the public sector minimizes its direct, day-to-day involvement and shifts potential risks to the private sector. These three approaches are:

1. A private firm may step forward on its own or in response to a request for proposals (RFP) and agree to provide and administer recycling processing or marketing services (and possibly collection) through a full-service contract with the Town, E2RA, Brookhaven or other cooperative entities. The municipal entity pays the firm on a per ton basis and bears no financial risk for system failure but would share risks associated with delivery of materials and market costs or revenues.

2. A private enterprise may provide recycling services without a direct municipal contract, but rather as a result of indirect government action such as legislation (e.g. material disposal bans) or promotional activites.

3. A private enterprise may provide recycling services in response to favorable market conditions (e.g., profitability) without any government actions directed to increasing recycling. This approach has been taken, by default, in the past and results in intermittant recycling of only selected materials such as corrugated cardboard, scrap metals and glass when markets were favorable. This approach constitutes the "no action" alternative in which the Town takes no action to increase recycling, but leaves recycling to the private sector. It should be noted that it is unlikely that this approach would result in any improvement since any recycling that is profitable is probably already being done by private enterprise.

It is important to note that, with the exception of Case 3 in which a private firm provides services in response to favorable markets, the arrangements described above develop as a reaction to government action. Private enterprise arrangements generally are a method by which a government entity responsible for implementing recycling can share the burden of the risks involved and avoid unnecessary intrusions into the market place. As such, private enterprise is not in itself an alternative to the other administrative options described herein, but is an approach to implementation that should be considered by the selected administrative body. That administrative body, whether it be E2RA, the Town, a Regional Authority or any other entity, should continue to play an active role in the recycling program.

Private firms may or may not provide recycling services in response to market demand or government legislation. If this can happen, the municipal entity does not have to contract for services, carries no risks, but has little or no control over recycling activities. Market conditions today, do not appear to be favorable to this approach however.

Certain waste materials have traditionally had ready markets and earned high enough revenues to make their recycling a profit oriented enterprise. Some of these materials are high grade paper, scrap metals, glass bottles, industrial textile wastes, waste oil, etc. Typically, recycling of these wastes has been limited primarily to collection from commercial and industrial establishments and is dependent on market conditions.

Private enterprise has also recycled as a result of government action. A cogent example is the recycling of a substantial quantity of C&D in Southampton by George's Sanitation, Inc., as a result of Town legislation banning the disposal of C&D in North Sea Landfill (see Section 3.3.3.2, Construction and Demolition Debris). Although the law does not require C&D recycling, the prohibitive cost of hauling to and disposal in a permitted C&D landfill makes extensive recycling feasible. Another example is the combined impact of New York State Environmental Conservation Law, 23-2307 which requires services establishments to construct oil retention facilities, accept waste oil and recycle it; and 23-2308, which bans improper disposal of waste oil. The drawbacks of this approach are that it does not give the municipal entity any direct control or oversight ability and recyclability of a material is still subject to market availability and feasibility. For example, several New York paper brokers have recently discontinued accepting newspaper reportedly because of the current oversupply.

Under the <u>first implementation approach</u> discussed in this section, the full-service contract approach, a private firm may provide collection, processing and marketing services under one contract. For example, Seattle, Washington has five year contracts for the provision of residential curbside collection, processing and materials marketing with two firms. Recycle America, a subsidiary of Waste Management, Inc., provides all three services for the northern section of the city and Rabanco

Companies, a local waste hauler, services the southern section. Under the contracts, the companies are paid on a per ton basis. Newspaper, mixed paper, tin cans, aluminum cans and glass bottles are recycled under these contracts.

Alternatively, the municipal entity may contract with a firm to perform one or two of the "links" in the recycling chain. For example, Omni Technical, Inc. provides processing and marketing services for commingled cans and glass containers for several municipalities on Western Long Island. Omni has come forward to express its willingness to provide these services to Southampton and the East End Towns and could potentially process them in their new plant in Islip.

Full service contracts are discussed in greater detail in Section 7.3.3.3, Full Service with Private Ownership, and Section 7.3.3.4, Full Service with Public Ownership.

6.3.5 Other Initiatives

Two other initiatives for improving recycling activities in the region are being developed which may impact Southampton's recycling program. These include a Suffolk County towns marketing cooperative and initiatives by the Suffolk County recycling coordinator.

Suffolk County Towns Marketing Cooperative

The supervisors for the towns in Suffolk County have agreed to pursue the formation of a marketing cooperative for marketing recyclables collected in all the Towns. Section 6.8.2, Marketing Cooperatives provides a detailed account of the advantages and disadvantages of a marketing cooperative. At this time, the administrative approach for a market cooperative has not been fully developed.

In addition to the advantages to a regional marketing cooperative already described in Section 6.8.2, Suffolk County is favorably situated geographically for a marketing cooperative. Since Suffolk County is bordered on three sides by water, and very few if any end users exist within the County, all of the towns must send their recyclables west to the same pool of buyers. United, all of the towns would improve their standing in that pool and should be able to attract bigger buyers, higher prices and stronger contracts.

Suffolk County Recycling Coordinator

Suffolk County has created a Recycling Coordinator position within its Department of General Services. The current Recycling Coordinator reports that his office is considering a number of specific programs. At this time, it does not appear that the County will get directly involved in the collection, processing and marketing of recyclables since the towns, both individually and together, have been developing programs on their own for several years. Also, the County recycling office does not have adequate funds for such activities on a County-wide scale.

Most of the County coordinator's time is devoted to market development within the County and County-wide promotion and education. The primary effort thus far has been in the area of attracting new end-user markets to Suffolk County. The County recycling coordinator has been working with the State, particularly the Department of Economic Development, to identify and list government sponsored business development incentives for industries that use secondary materials as well as other significant information for attracting new markets. The information has been compiled into the document, "Expanding and Attracting Recycling Industries, A Compendium of Basic Information," (May 1989).

The development of new markets for recyclables is an absolute must given the expanding materials supply from new recycling efforts in the United States. The Town should work closely with the County and may provide additional incentives such as recyclables output contracts (supply guarantees), special governmental recycled products procurements practices, tax breaks, etc., to attract new markets to the region.

The County is also undertaking or considering a number of other projects including:

- County-wide recycling promotion awareness activities.
- Providing a site near the Suffolk County Airport for a MRF for the East End Towns.
- Arranging for used tire processing in the County.
- Sponsoring recycling workshops for individuals responsible for recycling programs in the County.
- Sponsoring a study on aggressive recycling in Suffolk County by the Center of the Biology of Natural Systems.

6.4 WASTE REDUCTION

Waste reduction refers to efforts to reduce the generation of waste that requires disposal. It involves changes in consumer buying patterns, curbing wasteful business practices, setting new priorities in packaging design and emphasizing waste control in manufacturing. Waste reduction efforts have been used to reduce the quantity of waste generated and toxicity levels in the waste.

Some examples of waste reduction efforts are given in Table 6-5. Although this list includes many typical reduction efforts, it is not all inclusive. Numerous other possibilities exist and new ways to reduce waste are constantly being discovered. It should be noted that many of these activities also result in cost savings.

As is apparent from Table 6-5, any one individual effort to reduce waste may only result in a minor reduction. But, if many people and businesses were to initiate these waste saving activities, the cumulative effect would be significant. The place of government in waste reduction is to stimulate these actions by the public and to implement waste reduction measures in its own actions.

Waste reduction is the preferred waste management method in the State Plan solid waste management hierarchy. The State Plan establishes a goal of 8 to 10 percent reduction in waste generation to be achieved primarily through State action.

Actions recommended or planned at the state level to stimulate waste reduction include:

- state action to control the volume of packaging wastes, including expansion of the Returnable Beverage Container Law
- waste initiators tax
- participation in nation-wide efforts to control the bulk, weight, and volume of packaging
- a public education program, including a public school curriculum.

TABLE 6-5

EXAMPLES OF WASTE REDUCTION ACTIONS

Homeowner/Consumer

- Select durable items when purchasing clothes, appliances, etc. that may cost a little more, but have a longer life.
- Purchase reusable rather than disposable items such as razors, diapers, dishes, etc.
- Select products that have one rather than two or three layers of packaging such as a deorderant can in a box wrapped with plastic.
- Buy concentrated or bulk "economy-size" items.
- Repair rather than throw away broken or worn appliances, shoes, clothing, etc.
- Donate used items to needy organizations.
- Reuse cardboard boxes, glass containers and plastic bags.
- Unclog drains with snakes and plungers instead of chemical drain decloggers.

Business/Manufacturing

- 70% of the average office waste is paper. This can be reduced through numerous cost saving measures such as: copying double sided, central rather then multiple filing, use scrap paper for messages, eliminate or minimize forms, circulate memos rather than distributing multiple copies, etc.
- Purchase refurbished used equipment or rebuild old equipment already owned.
- Implement a conscientious waste quantity control program by using more efficient equipment, employee training and better quality management to reduce rejects.
- Join "waste exchange" programs.
- Use sturdy, reusable pallets and shipping containers.
- Often, toxic wastes can be salvaged in-house for reuse at less cost than expensive toxic waste disposal.
- Use cloth rags often supplied by linen services for cleaning machinery and products.

Packaging wastes is a primary target of waste reduction measures. The State Plan notes that per capita usage of packaging products has nearly doubled between 1958 and 1986. The 1996 usage is projected to be 1000 pounds per capita annually, and 90 percent of all pack aging materials is disposed as waste. The State Plan sets a waste reduction target of 8 to 10 percent over the next ten years, and relies on proposed legislative changes to the Returnable Beverage Container Law, a proposed New York State (NYS) waste initiators' tax, and proposed standards for packaging. This 8 to 10 percent reduction may control packaging waste increases over the next 10 years.

Waste reduction efforts have generally been the preview of state and federal regulation since many products are distributed regionally or nationwide. The EPA was directed to initiate a waste minimization program under the 1984 Resource Conservation and Recovery Act Amendments. This program focuses on waste reduction by industry (often called "waste minimization"). The Congressional Office of Technology Assessment has also studied waste minimization. At the regional level, the Council of Northeast Governors (CONEG) established a Source Reduction Task Force. The Task Force developed an Interim and Final Report addressing various issues of source reduction and strategies for a coordinated regional effort to reduce wastes.

It should be noted that local and state regulatory efforts to reduce waste through specific legislated restrictions on business activities such as packaging may be challenged as an infringement on the federal power under the commerce clause of the United States Constitution or as a violation of the equal protection clause. Since few laws in this area have been enacted, there is little precedent on these issues. In one notable case, Minnesota vs. Clover Leaf Creamery Co. 449 U.S. 456 (1981), the U.S. Supreme Court, reversing a Minnesota Supreme Court decision, held that a state law banning plastic non-refillable milk containers while preserving paper milk cartons did not violate the U.S. constitution. The court reasoned that the law bore a rational relationship to the state's purpose of fostering better use of environmentally desireable alternatives and that the ban did not unduly prejudice out of state businesses in favor of in state businesses. Thus, the legal survivability of directly

regulating packaging waste reduction laws may depend on a balancing of state or municipal public health interests and the burdens on interstate commerce caused by the law.

More and more local governments are taking action to effect waste reduction in the absence or slowness of the Federal and state initiatives. There are several actions that can be undertaken by the Town or E2RA to effect waste reduction. These actions may be divided into two general types: education and legislation.

6.4.1 Waste Reduction Through Education

Educational efforts involve teaching various target groups about the problems of solid waste and what they can do to help by reducing the waste they generate. To develop effective waste reduction education programs it is necessary to identify target groups and define the appropriate measures to implement the educational program. Target groups in Southampton may include:

- consumers
- educators (primary, secondary and college level)
- producers, industry and
- retail businesses.

Educational measures that may be considered include:

- media programs
- informational newsletters
- special school curricula
- technical assistance on waste minimization at its source (businesses, producers and industry).

Educating consumers on how to reduce waste by developing new purchasing habits has received much attention recently. Several states including Pennsylvania, Rhode Island and New Jersey have undertaken "environmental shopping campaigns" and other measures to teach consumers how to use their shopping dollars to reduce waste. These programs could be adapted to the local Town level. The aid of private business is often enlisted to provide financial assistance and appropriate locations (stores) to disseminate information.

6.4.2 Waste Reduction Through Legislation

Legislative action at the Town or County level can be used to promote waste reduction at its source. The Suffolk County ban on polystyrene and polyvinyl chloride food packaging is just one example of this approach. Again, a good approach to implementing effective legislative action is to define target groups first and then develop appropriate legislative measures. Target groups may include:

- government officials/departments
- consumers
- commercial businesses and
- producers and designers.

Selecting the appropriate legislation depends on the target group and the desired result. Legislative measures will fall into three general categories: policy declarations, incentives and disincentives. Town board resolutions can define a Town waste reduction policy. Direct regulation such as bans on specific materials or deposit laws can be used. Alternatively, the Town can use its spending and taxing powers to influence waste generation. Examples of these measures include: disposal surcharges, taxing waste generating activities, tax credits/exemptions for waste reduction efforts and new government procurement guidelines.

The effectiveness of local governmental action to encourage waste reduction has not been measured. It is not known how cost effective these actions are in terms of realizing significant reductions in waste generation. It is recommended that the Town carefully consider specific waste reduction measures before implementing them.

Planning specific waste reduction measures and programs is beyond the scope of this report since they require detailed consideration and development. The Town and E2RA should closely monitor state and federal initiatives and consider further development of waste reduction measures.

6.5 COMMERCIAL AND INDUSTRIAL WASTE RECYCLING STRATEGIES

In Southampton, waste generators in the commercial/industrial segment fall into one of three categories: commercial establishments, agriculture and the construction industry.

The primary wastes of the agricultural industry, manures and vegetative wastes, are excellent materials for composting. These wastes are already collected and brought to the landfill separately. Composting of these wastes is further discussed in Section 6.9.3 of this report.

C&D generated by the construction industry contains large quantities of wood, rubble, cardboard and plastics, which is already being recycled in large quantities. Future activities in C&D recycling are described in Section 6.9.4 of this report.

Commercial establishments such as restaurants, department stores, retail shops, supermarkets and offices generate relatively homogeneous streams of recyclables such as corrugated cardboard, glass, plastics, tin and aluminum cans and high grade office paper.

There are several options available for instituting recycling programs for commercial establishments. One option is to allow commercial establishments, along with the haulers and recyclables brokers, to develop their own individual programs with assistance from the Town and E2RA. Assistance can include providing technical assistance for program development, educational materials for establishments and/or employees, and marketing assistance. In addition, mandatory recycling laws can be used as an impetus for the commercial establishments to recycle. This type of approach will provide commercial establishments with the opportunity to market recyclable materials to secondary markets through traditional business channels and allows commercial establishments to benefit from potential revenues associated with recyclable materials. Also, for some establishments, the incentive of reducing waste disposal costs significantly would increase cooperation and participation in establishing recycling programs in the commercial sector.

A second option is for the Town or E2RA to become involved directly with the collection, processing and marketing of recyclables generated by the commercial sector. Should the Town or region decide to establish a MRF, one option is to size the facility to accept recyclables generated by the commercial sector in addition to the residential sector. It may be necessary, however, for the Town to enact flow control laws or ordinances in order to ensure the delivery of recyclables from commercial establishments to dedicated processing facility. Under this option, the

Town will most likely need to provide technical assistance and promotional and educational materials for the commercial sector as well.

6.6 PUBLIC PARTICIPATION

Public participation is one of two very important source separation/recycling issues which the Town can only control indirectly (the other being marketing). The Town can use incentives and disincentives including education and promotion, recyclables-garbage tipping fee differentials and enforcement of mandatory participation ordinances to change the waste disposal habits of the public to facilitate waste diversion through source separation. These efforts can be targeted for residents as well as commercial/institutional waste generation sources.

6.6.1 Promotion and Education Program

A strong, effective promotion and education program is crucial for developing source separation habits among the public. Promotional activities increase public awareness of the recycling program. Educational activities inform residents and businesses of how they can participate and of the importance of their participation. Promotional/educational campaigns will generate high participation by energizing the potential for source separation that already exists to make recycling happen. The East End Towns LRRRP grant application (1988), referencing a 1983 survey by the League of Women Voters, indicated that, "90% of households are willing to recycle". This tremendous community interest should lead to good participation; but it will only develop with an organized effort and the commitment of resources to promotion and education.

The Town has already begun a solid waste and recycling promotional and educational program with the distribution of the first edition of a newsletter, "Wastelines", devoted exclusively to solid waste management issues. The Town has also printed and distributed instructional flyers for residents regarding Phase 1 of the new mandatory recycling program. In October 1988, the Town along with the other four East End Towns,

applied for and later received a $250,000 Local Resource Reuse and Recovery Program Grant from the NYSDEC.

It is important to develop a planned, organized public promotional/educational program that will provide consistent and effective information timed for release with milestones in the implementation of the recycling program. Promotion and education must be an ongoing component of the recycling program. Experiences of other communities indicate that the Town should consider retaining professional public relations services for its promotional/educational program in order to develop a plan, and identify and maximize use of all promotional opportunities available (AWWA Journal, Management and Operations, October 1988). A public promotion/education program plan may include the following elements:

1. Research and Development of Program

   - Review existing methods for publicity within Southampton.

   - Review the Town's community-oriented programs involving environmental issues (including household hazardous waste collection, etc.), conservation measures, educational programs (including field trips), seasonal events, holiday activities (parades, etc.).

   - Determine media sources, corresponding publicity events, and available resources (non-profit or religious groups).

   - Identify overall theme, copy/graphic orientations, publicity formats and distribution methods.

2. Graphic Arts/Electronic Media Production

   - Develop copy and mechanical artwork for posters, mailers, flyers, letterhead, and print-oriented publicity to include billboards, displays, vehicle decals, etc.

   - Develop electronic media publicity materials to include the production of radio and television public service announcements (PSA's) and advertisements (including local community cable access) and education filmstrips.

3. Press Relations

   Based on initial research of the local media, produce a complete media list and cultivate press contacts appropriately.

Additional:

- Develop fact sheets or press kits with details of the SWAMP. Specific materials promoting recycling will be central to this effort.

- Hold press conferences prior to project milestones. Establish an agenda (program start-up plans, who is affected, scheduling, and long-term goals) arrange for a location and invite all local media contacts (print and radio and TV). Develop appropriate visual materials (maps, charts, etc.) for use as appropriate.

- Develop and place feature articles and press releases to inform the community of key project milestones.

- Develop an informed communications contact within the Town to respond to press inquiries and requests for information.

4. Elementary, Secondary and College Level Education Programs

- Create in-school educational program to include workbook materials (teacher manuals, etc.) and home participation exercises.

- Coordinate special events including field trips to facilities, guest presentations, etc.

- Solicit assistance of interested teachers, professors and students for developing special recycling projects for the schools.

The involvement should be solicited of as many prominent persons in the community as possible from government, the media and various public organizations. Involving these people in promotion of recycling will give them a stake in the recycling program and will lead to strong public support. The public is more responsive to supportive statements by community leaders. With continuous support and reinforcement and community leaders adopting a recycling ethic, the general public will follow.

6.6.2 Economic Incentives

An effective technique for improving public participation is to institute economic incentives that make it cheaper for the waste generator to recycle materials rather than dispose of them. Generally, residents

and haulers can be permitted to tip recyclables for free or at a reduced charge and garbage disposal fees are structured so that the waste generator pays according to the quantity of garbage it disposes of. The less waste the generator disposes of (and recycles through source separation), the less he or she has to pay.

The Town of Perkasie, Pennsylvania, (population 6,200), for example, charges residents $1.50 each for specially marked garbage bags. Garbage is not collected unless contained in the bags. The Town provides buckets for recyclable materials and collects it for free. It is reported that, since the Town began charging for waste disposal on a per bag basis, the Town now disposes of about half as much garbage as before and collection and disposal costs have been reduced by 30 and 40 percent respectively. Generally, public opinion of the cost per bag program is favorable since homeowners can, in effect, control their garbage disposal costs and have reportedly lower those costs in general. Seattle, Washington has a similar approach. Residents pay a set monthly rate for weekly pickup of one garbage can, but pay $5 more for each additional can collected. Recyclables collection is provided at no cost.

Southampton Local Law No. 16 of 1988, which amended Chapter 37 of the Town Code added a new section waiving disposal facility usage fees for depositing source separated recyclables. This law is an incentive for the private collection services which pay a $20 per ton tipping fee. However, the $20 per ton fee is a relatively small portion of the haulers' overall costs. The savings attributable to recycling are too small to make anything more than the simplest recycling activities cost effective. Also, the haulers do not have an effective way to pass on cost savings to their customers as an incentive for them to source separate. The law has little economic impact for self-haulers since self-haulers either pay an annual $20 fee or $1 per visit and do not pay according to the quantity of material they dispose of.

The Town could provide a greater economic incentive to recycle by changing its fee structure to charge self-haulers according to the quantity of waste they deliver. In addition, the Town may consider increasing per ton tipping fees charged to the private haulers in accord with increasing disposal costs and assisting them in arranging for passing

on cost savings due to recycling to their customers through per garbage can fee structures.

6.6.3 Mandatory Participation Laws

Mandatory source separation laws, even if not enforced, often have a significant impact on participation. A problem usually experienced after the "newness" of the program wears off is that participation begins to lag. With enforcement, these laws can assure sustained compliance from the public.

New York State General Municipal Law, Section 120-aa, "requires" municipalities to adopt a local law by September 1, 1992, mandating source separation of solid waste "... components for which economic markets for alternate uses exists." The Town, in response to the Consent Order and with the understanding that recycling will help reduce disposal costs and prolonging landfill life, enacted Local Law No. 10 of 1989 on April 26, which mandates source separation of newspaper, leaves and yard wastes and scrap metals by residents beginning June 15, 1989. The 1989 Recycling Plan (Appendix D) also includes provision for mandatory legislation for separation of metal cans, glass containers, corrugated cardboard and other high value paper grades to take effect by the end of 1989. In the future, this law can be amended to include other recyclable materials for which economic markets exist and otherwise enhance source separation.

6.7 COLLECTION SYSTEMS

The methods used for collection of the source separated recyclables can have a significant impact on public participation, thereby influencing the quantity and, to an extent, the quality of the materials collected. The goal of the collection program is to maximize participation by the waste generators in order to recycle the greatest quantity of material possible. The means by which recyclables are collected depends on the physical qualities of the material and where it is generated. Other considerations in selecting a collection method for a particular material include the simplicity of participation for the waste generator,

adaptability to the existing collection system, processing systems and availability of funds.

In this section, various collection methods are discussed for each separated recyclables stream including residential recyclables, leaf and yard wastes, and commercial/institutional materials. These discussions focus on the various considerations for collection systems design listed above.

6.7.1 Residential Recyclables

To maximize participation (and thus quantity recycled), collection should minimize the changes in residential waste disposal habits that will be necessary for residents to source separate.

There are two basic methods used to collect residential recyclables (newspaper, cans, container glass, plastics, etc.) that must be considered: curbside/backyard pick-up and drop-off depots. Another important issue is to determine whether materials should be collected commingled or completely separated by type. Commingling is simpler for the resident, and may result in higher participation, but complete separation of materials can alleviate the need and cost for extensive processing systems at a MRF.

Drop-off Centers

Drop-off centers include any recycling operation wherein individuals must deliver their recyclable materials to a specified location such as the recycling center currently operated by Southampton at the landfill and drop-off transfer stations. Drop-off centers are typically operated by communities or non-profit organizations and may utilize paid or volunteer staffing (see Table 6-6). Some facilities, such as the University of Maryland Recycling Center, are left unattended in order to remain open 24 hours a day. This allows residents and businesses the opportunity to drop off materials at their convenience. Rather than being motivated by profits, drop-off centers are primarily developed in order to increase recycling in a community, divert material from landfills, and may provide a funding mechanism for an organization. Financial support for these centers is dependent upon revenues from recyclables donated by the public or is derived from public funds.

MALCOLM PIRNIE

TABLE 6-6

CHARACTERISTICS OF SELECTED MULTI-MATERIAL DROP-OFF CENTERS IN THE U.S.

Center Name & Location	Year Began	Population of Area Served	Materials Accepted (1)	Annual Tonnage	# of Sites	Paid Staff or Volunteers
North Shore Ecology Center Glencoe, IL	1971	33,200	ONP, GL, TC	4,008	12	Both
Senior Recycling Center Orland Park, IL	1978	23,000	ONP, GL, TC, AL, Oil	200	1	Volunteer
Palos Recycling Depot Palos Heights, IL	1980	50,000	ONP, GL, TC, AL, Oil, MP, OCC	305	1	Volunteer
Recycle Unlimited Grand Rapids, MI	1973	185,000	ONP, GL, TC, AL, Oil	3,000	33	Both
Univ. of Maryland Recy. Cntr. College Park, MD	1970	10,000	ONP, GL, TC, AL, MP, OCC	600	1	Both
Sussex County Recy. Cntr. Newton, NJ	1980	125,000	ONP, GL, TC, AL, MP, OCC, Other	1,761	1 plus 2 mobile trailers	Both
Portland Recycling Team Portland, OR	1970	381,000	ONP, GL, TC, AL, MP, OCC, Oil, Other	2,420	4	Both
Bloomsburg Volunteer Recy. Bloomsburg, PA	1977	60,000	ONP, GL, AL, MP, OCC, Other	2,200	21	Both
Waterstreet Rescue Mission Lancaster, PA	1970	350,000	ONP, GL, AL, OCC	200	50	Both
Westchester Area Recy. Center Westchester, PA	1981	30,000	ONP, GL, AL	593	1	Both
Bainbridge Recycling Bainbridge Island, WA	1978	12,000	ONP, GL, TC, AL, MP, OCC, Other	350	1	Paid

Note: (1) ONP - newspapers; OCC - old corrugated cardboard; MP - mixed paper; GL - glass bottles; TC - tin cans; AL - aluminum cans or scrap

Drop-off centers may vary in size and are particularly useful in areas of medium or low population density where curbside collection may be inefficient and in areas where residents self-haul their trash to a waste disposal facility. One mechanism for capturing the recyclables waste stream is siting satellite drop-off facilities throughout a community. Ideally, satellite drop-off sites should be located in highly traveled areas such as transfer stations, shopping centers, grocery stores, public buildings, multi-dwelling units, or even street corners. Receptacles, ranging from 55-gallon drums to 30 or 40-cubic-yard roll-off containers, are provided at satellite sites for residents to deposit their separated materials. An illustration of two types of drop-off bins for a satellite center is provided in Figure 6-1. Materials collected at a satellite drop-off site are picked up when bins are full.

The recyclables can be hauled from the satellite drop-off sites to a MRF for processing or directly to a buyer. Often, to accumulate adequate quantities to economically transport the recyclables to market, there will be a primary drop-off center where all recyclables collected in the community are accumulated. The center can be accessible to residents, haulers who collect curbside, and non-profit organizations that collect recyclables, thereby providing an outlet to anyone wishing to recycle. Due to the large volume these centers will handle, roll-off containers or other large transfer vehicles are typically used, and there may be provisions to make unloading more convenient, efficient and attractive. Provisions can include paving, landscaping, special access roads or a bi-level area for dumping materials from a truck into the transfer containers. Figure 6-2 provides an illustration of the bi- level drop-off center being constructed at the North Sea Landfill site as part of the 1989 Recycling Plan.

The Town will consider developing another primary drop-off center in the future at the Hampton Bays Transfer Station and/or, at the MRF if it is sited in the western portion of the Town. Operating a second primary drop-off center could have advantages including:

- greater convenience for private haulers and self-hauling residents located in the western part of the town,

- reducing car and truck traffic in the vicinity of the North Sea Landfill, and

- improved economics for recyclables transport since a primary drop-off center located in the western portion of the Town will be closer to processing facilities and markets.

A second center could be developed in the future when more recyclables are added to the source separation regime and more material is separated as participation increases at the Hampton Bays Transfer Station (see Section 7.3.9).

Curbside/Backyard Collection of Recyclables

"Curbside" collection is a generic term used to denote collection of source separated materials at the home by a collection service. Curbside collection has already started in Southampton as part of Phase 1 of the 1989 Recycling Program (see Appendix D). Actual collection methods can include backyard collection, however the additional cost of backyard recyclables collection will be higher.

Curbside collection requires residents to place their separated materials out for collection on a designated day. These materials can be picked up by either the municipality or a private hauler/recycler, usually for delivery to a processing facility or drop-off center. Materials collected vary from newspaper only, to multi-materials, which may include a combination of the following: aluminum, bimetal, corrugated, glass, newspaper, office papers, plastic (e.g., PET. HDPE), and tin- plated steel cans. The haulers provide curbside collection for selected materials in Southampton.

The number of municipalities in the United States with curbside collection programs has grown by over 300 percent since 1980, largely as a result of increased tipping fees at disposal facilities, shortage of landfill capacity, and increased public awareness of solid waste issues. With residents who have a garbage collection service, curbside collection programs usually realize higher participation and material diversion rates than drop-off centers, as a result of increased convenience to the home owner.

The frequency of curbside collection of recyclables usually ranges from weekly to monthly service. Participation and quantity of materials recycled tend to be highest for weekly collection. An evaluation of a number of curbside collection programs in Minnesota indicated that the

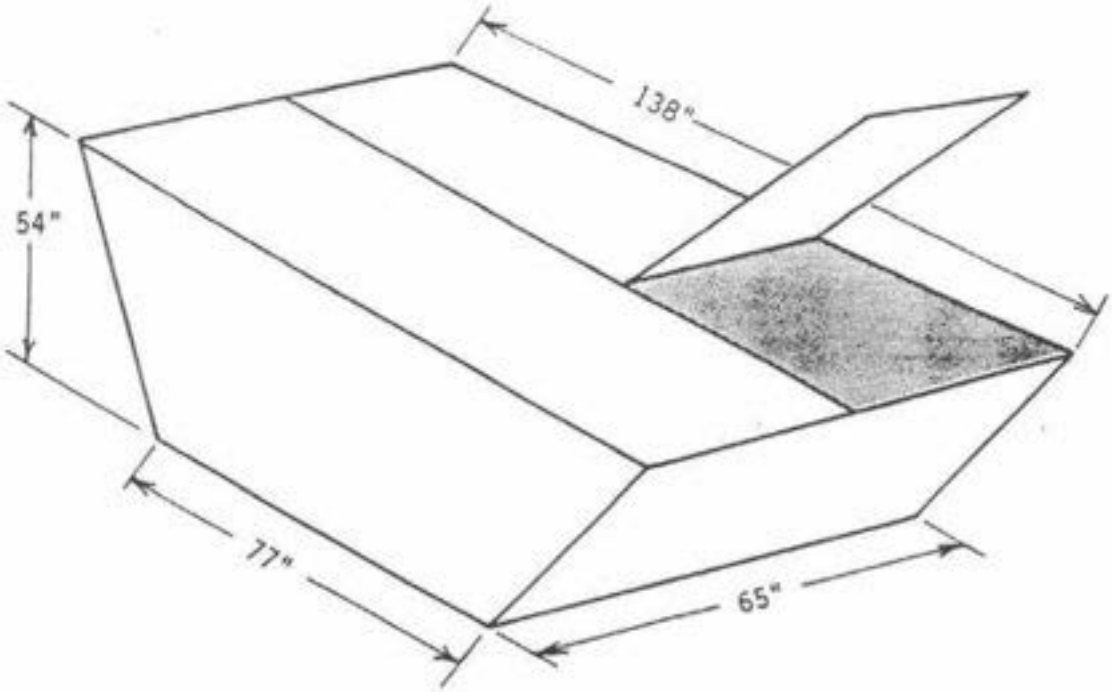

Load-Lugger Containers

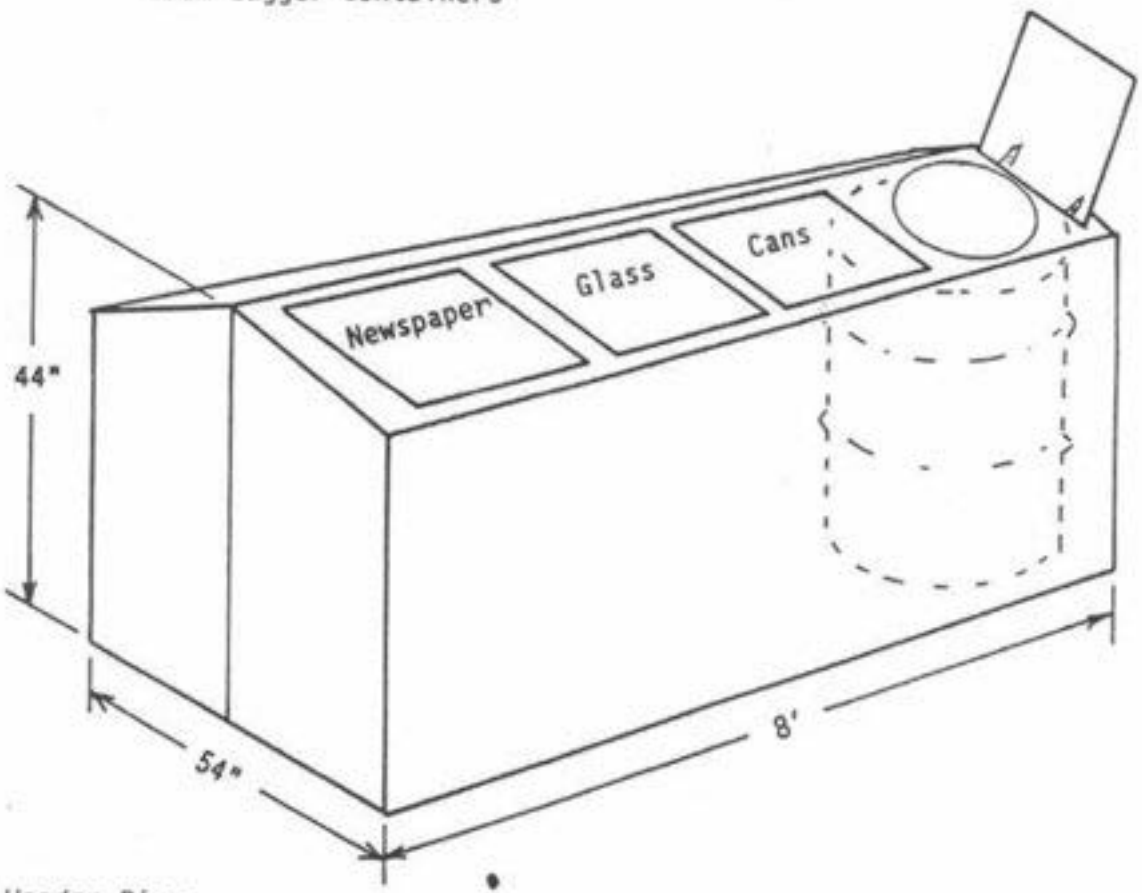

Wooden Bins

NOTE: DIMENSIONS SHOWN ARE TYPICAL FOR SUCH CONTAINERS, BUT DO NOT NECESSARILY DEPICT CONTAINER SIZES THE TOWN WILL USE.

MALCOLM

TOWN OF SOUTHAMPTON
SOLID WASTE MANAGEMENT PLAN

SATELLITE DROP-OFF BINS

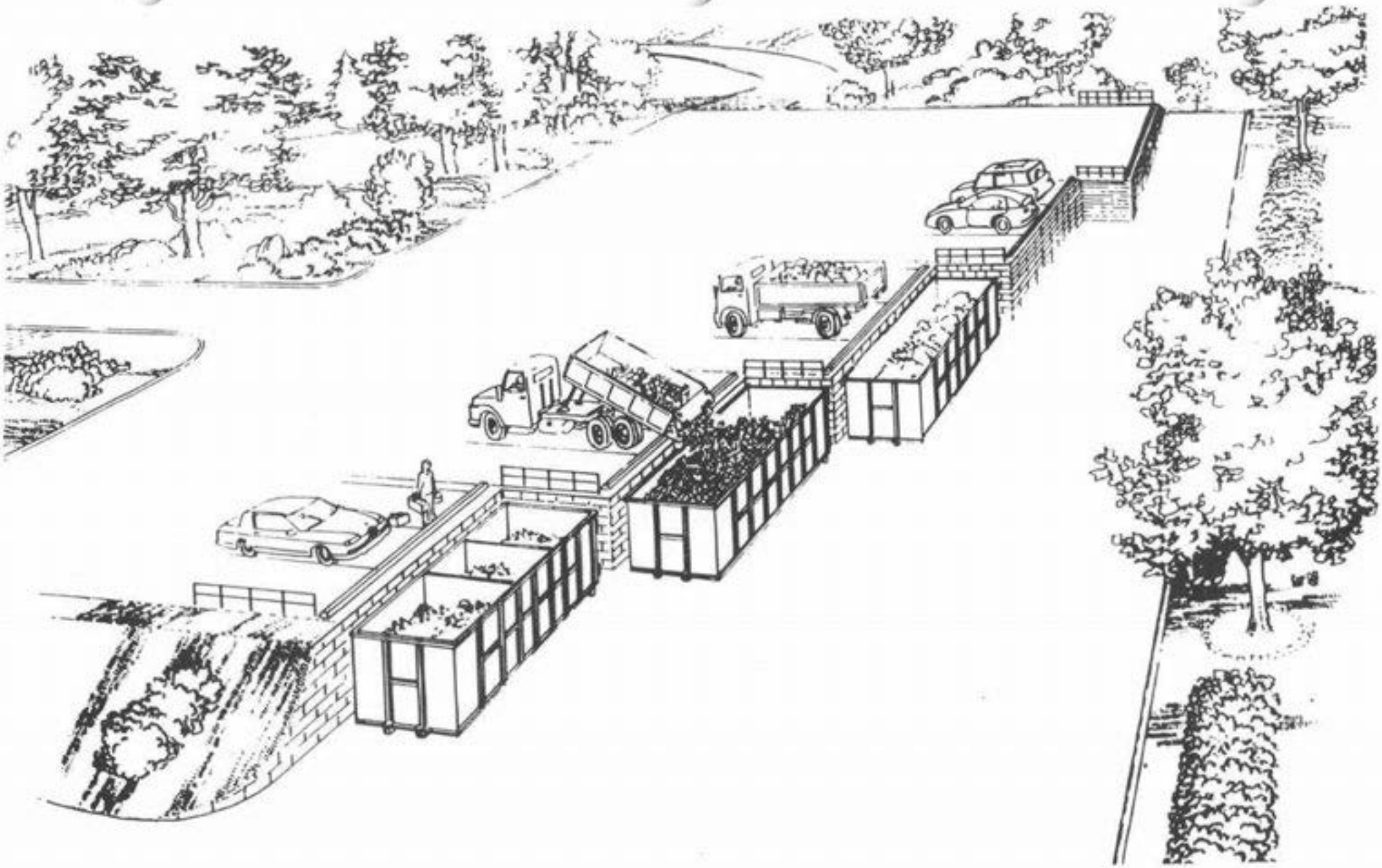

TOWN OF SOUTHAMPTON
SOLID WASTE MANAGEMENT PLAN

BI-LEVEL DROP-OFF CENTER
CONCEPTUAL DESIGN

NOT TO SCALE

FIGURE 6-2

MALCOLM PIRNIE

quantity of recyclables collected per household on a bi-weekly basis increased by a factor of two over that for collected on a monthly collection basis.

The degree of material separation required of the resident also varies depending on the program. Some programs require participants to separate their recyclables into as many as seven or more categories (clear glass, brown glass, green glass, newspaper, corrugated, metal cans, plastic containers), while other programs, such as in North Hempstead and Camden, New Jersey, allow all glass bottles and metal cans to be placed into one container (i.e., commingled) while other materials (newspaper, corrugated, etc.) are collected separately. In Islip and South Seattle, Washington, residents can place all recyclables (papers, glass, cans and some plastics) into one container.

Commingling of recyclables is considered advantageous by many because it improves collection efficiency and generates higher recycling quantities through better participation, but it also requires a more sophisticated processing facility. This is illustrated by Figure 6-3. Four levels of commingled collection are shown, each requiring a more complex processing system. The degree of separation by the household and the type of processing system needs to be coordinated in designing a recycling program.

The equipment required for implementing a curbside collection program are collection vehicles with appropriate storage compartments and, possibly, household containers provided to participating residents. The designs of vehicles used to collect recyclables vary significantly depending on materials collected and frequency of collection. For programs collecting solely newspaper, haulers frequently attach racks to existing garbage collection vehicles for picking up the newspaper at the same time as garbage collection. Alternatively, if the newspaper is collected on a special newspaper collection day, the newspaper can be collected in the main compartment of the garbage trucks.

For programs that collect multi-materials, the vehicle used will depend on how the materials will be separated by the homeowner. Materials separated by the homeowner are often collected with special compartmentalized trucks design specifically for recyclables pick-up or

trailers pulled by regular garbage trucks. If the recyclables are collected commingled, existing collection vehicles can be used.

Specialized vehicle prices range from $30,000 to $100,000. Vehicle selection is dependent on factors such as route size and condition, number of types and amounts of separated materials collected, loading and unloading requirements, and price of vehicle. In addition, some vehicles offer various options, such as right-hand drive, which is likely to improve the efficiency of collection. The unloading mechanism for the vehicle must be compatible with the recycling center or processing facility.

Many municipalities provide containers to households for storing and placing their recyclables outside for collection. Types of containers distributed range from 5- to 90-gallon buckets, reusable burlap or plastic fibre bags, and stackable, rectangular containers. These containers, placed on the curb, increase public awareness in the community and exert peer pressure on neighbors not recycling. In programs in Minneapolis, Minnesota and Islip, New York, monthly participation increased by over 50 percent for areas where containers were provided. As a result, quantities of material collected increased by 30 percent to 50 percent in these programs.

The cost for providing containers ranges from $0.90 for a reusable burlap bag to $21 for a set of three stackable containers. Thus, the purchase of containers for an entire town can be a substantial expense. These costs should be evaluated based on the benefits of the container and the goals of the recycling program.

The success of a curbside or drop-off program can be measured by several different methods including:

- <u>participation rate</u> - measures the percent of a population that sets out recyclables over a certain period of time

- <u>diversion rate</u> - measures the quantity of materials recycled divided by the total waste generated. Total waste generated equals waste disposed (via landfill, incineration, etc.) plus total quantity of materials recycled

- <u>net capture rate</u> - measures the percent of the total quantity of a material available that is actually recycled. See Section 3.3.3.3 for more details.

- <u>pounds/household/month or year</u> - measures the average quantity of recyclables set out per household per month or year

MATERIAL	SEPA-RATE	COMMINGLED POSSIBLE GROUPINGS (1)			
		A	B	C	D
NEWSPAPER					
CORRUGATED					
PET					
HDPE					
FILM					
TIN CANS					
BI-METAL					
ALUMINUM					
CLEAR GLASS					
GREEN GLASS					
AMBER GLASS					
NO. OF CONTAINERS (1)	11	7	4	2	1
COLLECTION STRATEGY	COMPLEX ← → SIMPLE				
PROCESS DESIGN	SIMPLE ← → COMPLEX				

RESIDENTIAL RECYCLABLE COLLECTION STRATEGY

- pounds/capita/month or year - measures the average quantity of recyclables set out per person per month or year.

In addition, a waste characterization study can be performed on a test area to determine the quantity of material not being recycled.

6.7.2 Leaf and Yard Waste Collection

Collection of source separated yard waste (leaves, grass clippings, and brush) can be accomplished by two basic methods. The simplest method is a drop-off site to which citizens voluntarily deliver yard debris. A separate collection program is the alternative method.

A drop-off site is advantageous because it involves only a small investment, and requires less effort and personnel than does curbside collection. The tonnages diverted depend on the extent of self-hauling of garbage, and whether yard waste is banned from disposal and how strictly that ban is enforced. Curbside collection offers residents a convenient method for keeping yard debris separate from other solid wastes and typically results in greater diversion than does drop-off. Historically, curbside collection of yard waste has been limited to one to three special collections during the seasons that correspond to the beginning and end of the growing seasons. However, some waste haulers and municipalities have been offering more frequent collection. In East Grand Rapids, Michigan, for example, 12,000 cubic yards of yard waste were collected from 14,000 homes served by a weekly collection program. Maximum recycling of yard waste quantities may best be achieved by communities incorporating both curbside collection and drop-off sites, particularly in a community such as Southampton where residents both self-haul and use garbage collection services.

Yard waste can be picked up in bags or in bulk at curbside. While bagged waste is easier to collect, plastic bags present a problem because additional labor and time is required, either at the point of collection or at the central composting facility, to remove the material from the bags. Several municipalities have been experimenting with biodegradable paper or plastic bags as one solution. Another strategy being used by a private hauler in Omaha, Nebraska, involves renting 90-gallon plastic

containers to residents for their yard waste. The residents are charged $10 for rental and save on purchase of plastic bags. Another alternative is the distribution of reusable burlap bags.

If yard waste is bagged, rear loaders or trailers can serve as the collection equipment. Other types of equipment are required for bulk yard debris at the curb. Equipment for the collection of loose yard debris include using leaf-loader vacuums ($16,000) attached to a dump truck, or barrel-shaped packers ($110,000), which have a nozzle attachment for the collection of yard waste. A third option is to use a rubber-wheeled front-end loader, typically with a claw attachment to improve efficiency, to load an open-top or compaction collection vehicle.

The cost of curbside collection varies depending on frequency of pickup, vehicle type, collection strategy, and volume of materials. Table 6-7 presents leaf collection costs for Montgomery County, Maryland. The costs shown are presented as an example only. Depending on waste composition, collection frequency and participation rates, diversion rates from yard waste collection typically range from 3 percent to 15 percent.

6.7.3 Commercial/Institutional Materials

The recycling strategy described in this section addresses commercial establishments that generate large quantities of recyclable material(s), particularly corrugated cardboard and office paper. Corrugated is the largest source of paper material recycled in the United States, and comprises an estimated 15 percent of the Southampton waste stream. Other applicable waste streams include high-grade office paper generated in local and State government offices; banks, insurance companies and other corporate offices; and glass and metal containers from restaurants and hotels.

The collection of corrugated typically involves using a separate container exclusively for this material unless the commercial establishment generates only small quantities. If large volumes of corrugated are generated (above five tons per month), it is often economical to bale the material on site. Depending on market conditions, haulers and private recycling firms will often provide a baler or compactor to the commercial establishment in exchange for the baled corrugated and a nominal fee.

TABLE 6-7

LEAF COLLECTION AND COMPOSTING OPERATION COSTS FOR MONTGOMERY COUNTY, MARYLAND[1]

	Fiscal 1987 Actual	Fiscal 1988 Budgeted
Volume (cubic yards)	106,737	115,000
Leaf Collection Costs		
Labor and fringes (county workers)	$ 906,045	$1,036,450
Contract labor cost	63,116	0
Equipment[2]	305,918	259,680
Materials[3]	20,944	14,000
Subtotal	$1,296,023	$1,310,130
Composting Facility	$ 285,000	$ 385,000
TOTAL COST	$1,581,023	$1,695,130
COST PER CUBIC YARD	$ 14.80	$ 14.75
COST PER RAW (UNCOMPOSTED) TON[4]	$ 74.00	$ 73.70

Notes:

(1) Source: Spielmann, Brian A., "A Yard Waste Primer", Waste Age, February 1988.

(2) Rental from motor pool. Includes depreciation, repairs, fuel.

(3) Construction of leaf boxes, rakes, pitch forks, boots.

(4) Assumes leaf density of 400 lbs/cy for leaves as collected.

The hauler benefits from a reduction in the quantity of waste requiring disposal and from the sale of the corrugated. The establishment may benefit by saving all or a portion of the disposal costs for the corrugated. Other equipment sometimes used are a trailer or roll-off container to store the baled material. The latter equipment may be provided free of charge if sufficient quantities are generated.

The economics of corrugated recovery have proven favorable compared to the alternatives of landfill disposal. Since commercial businesses are generally charged on a volume basis for refuse collection, the removal of corrugated from the businesses' solid wastes can result in a significant reduction in disposal costs.

For collection of office paper, the office employees place the high grade paper in special receptacles. Collection strategies consist of variations on the following:

- Desk-Top - each employee is provided a small corrugated container or folder in which to place high-grade paper. Material is then delivered to a central location in the building for pick-up by or delivery to a paper dealer.

- Dual Basket - each employee is provided with two baskets, one for recyclable paper and one for other refuse. The custodial staff collects the recyclable paper and dumps the material into a large bin.

- Central Container - employees separate high grade paper and accumulate it in a recycling container of their choice. This material is delivered by the employee to a centrally located container, and can be placed near high paper usage areas such as a copy room or near a computer printer.

Potential for waste diversion depends on the type of business, high grade paper usage, and participation level. A study conducted by the United States Environmental Protection Agency (EPA), Optimization of Office Paper Recovery Systems (1988), indicated that total office waste generation rates can range from 1.55 pounds per employee per day to 5.23 pounds per employee per day. Paper (computer tab cards, white ledger, color ledger, newspaper) waste generation rates can range from 1.0 to 2.0 pounds per employee per day, depending on the type of office. Since January 1989, the Town has been recycling office paper at the Town Hall.

Approximately 300 to 400 pounds of paper is recycled each month through this program.

6.8 MATERIALS MARKETING

Economic viability of recycling is dependent on the availability of economically feasible markets for each material. Numerous factors affect the viability and volatility of markets which, in turn, will influence program design and implementation, since the marketability of materials is crucial to any recycling program. Section 3.3.3, provides a general discussion of what items in the Town's waste stream may be recycled. This section describes the factors that will have an impact on the marketability of these items, what can be done during implementation in anticipation of future market volatility, and possible affirmative actions that can be taken to stabilize old markets and encourage new ones.

Secondary materials markets are particularly volatile due to the numerous marketplace variables that can have a significant impact on price and demand for recyclables. These variables include:

- domestic and international economic forces
- price and availability of virgin materials
- profitability of individual firms
- government regulation
- supply and demand variations
- development of new materials processing and remanufacture technologies
- discovery of inexpensive virgin material sources.

Although examples of market volatility are numerous, the most cogent is the recent crash in the value of old newspaper. Figure 6-4 shows the rapid decrease in regular newspaper prices (newspaper collected in source separation programs) in the past year. Corrugated cardboard and mixed paper has followed suit whereas high grade paper have maintained high values. The sudden decline in regular newspaper prices has been attributed to a number of different economic forces, but one likely contributing cause is the expansion in supply of old newspaper due to the development of new municipal recycling programs (Recycling Times, May 23, 1989). The enactment of more and more mandatory recycling laws at both the state and local levels in the United States may have a similar impact

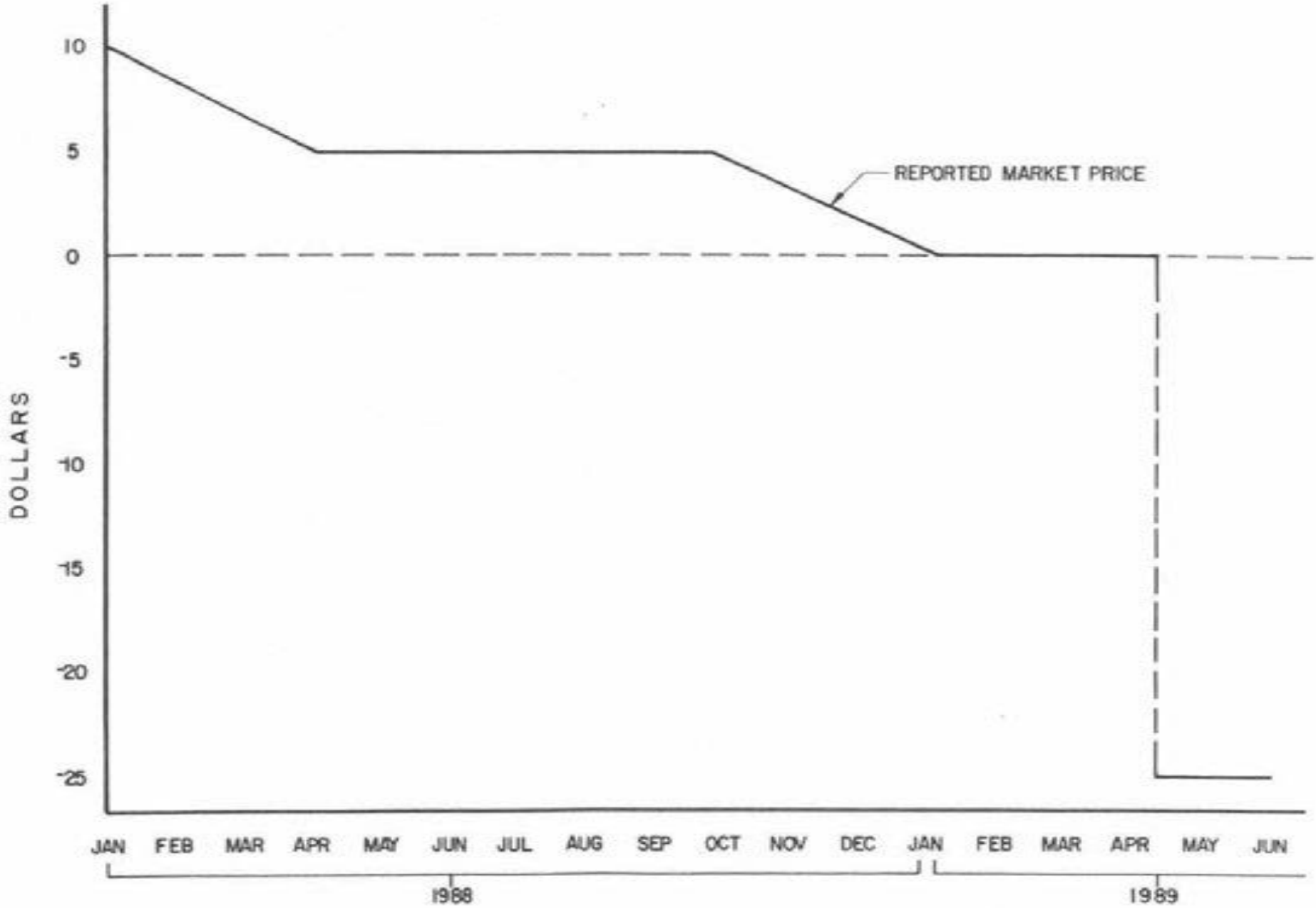

SOURCE: BASED ON INFORMATION PROVIDED IN "FIBER MARKET NEWS".

MALCOLM PIRNIE

TOWN OF SOUTHAMPTON
SOLID WASTE MANAGEMENT PLAN

DECLINE IN REGULAR NEWSPAPER PRICE JANUARY 1988 TO JUNE 1989

FIGURE 6-4

for other recyclables material in the future. Localized downward price trends for some other paper grades, glass and scrap metals have already been observed.

However, it is likely that in time entrepreneurs will respond to the expanded supply of inexpensive feed materials by developing new plant capacity and new uses for the materials. Although indications are very preliminary, it appears that development of new mill capacity for newsprint in response to the growing supply may already have begun in the United States and overseas (Recycling Times, May 23, 1989). The available information is too preliminary at this time to assess the impacts of this new plant capacity on market conditions in Southampton, but it is not expected that the newspaper or old cardboard markets will improve much in the next 1-2 years.

The Town can adapt its implementation approach to minimize the impacts of market volatility on the marketability of recyclables collected. The Town's approach should be directed at marketing large, consistent quantities of materials which meet or exceed market specifications. In addition, the Town can develop strong contacts with specific buyers or through market contracts to develop a consistent outlet for the materials. Three methods for improving materials marketability which should be considered during planning and implementation include: market cooperatives, materials processing and sales contracts. These methods are described below.

6.8.1 Existing Markets Survey

A survey of existing recyclables markets on Long Island was completed in March 1989. The survey provided information on the availability of markets for potentially recyclable materials and various market characteristics. Table 6-8 presents the results of this survey.

This information is an important, general guide in the development of a municipal recycling program with respect to selecting the materials to be targeted for recycling and collection and preparation of materials for market acceptance. In addition, important information on the nature of the buyers in the region; i.e. broker or remanufacturer, location, etc.

was gathered which is helpful in determining how materials should be marketed.

Market conditions will preclude or encourage the selection of materials to be targeted for recycling in the program. Also, they will partially define the economic and technical feasibility of different collection and processing strategies. For many materials, program strategy will depend on choosing the most favorable tradeoffs between maximizing recovery rates and meeting market demands while controlling costs. The survey indicated that buyers for many recyclable materials exist on Long Island (see Table 6-8). All of the buyers except Omni Technical Services take only materials separated by type. Glass must be separated by color, paper by grade and metals by kind. Omni charges to take mixed glass and metal containers.

In general, the buyers in the region are materials brokers or processors who accumulate large quantities of material and sell it to end users (remanufacturers) located off Island or overseas. The majority of these brokers are located in Western Suffolk and Nassau County. Note that several private haulers operating in Southampton may handle recyclables (see Section 3.2.4 of this report for details).

It is important to stress that recyclable markets are highly volatile and ever changing. Prices can change substantially in a short period of time. Furthermore, shifts in consumer preference and changing technologies for packaging and remanufacture will cause recyclables markets to form for materials that were not previously recycled and possibly cause old markets to fade. As such, this survey should only be used as a general guide for program development. The Town should carefully monitor new developments in the recycling arena as they arise.

The failure of a recycling market is always a possibility. Currently, if an existing buyer stops taking a material, the Town can temporarily store materials until another buyer is found. The Sanitation Department has been responsible for identifying markets for several years and is aware of most of the recyclables brokers on Long Island. Also, since the Town is responsible for transporting the recyclables from the recycling centers to the buyers facility, new or special transport

TABLE 6-8

Markets for Recyclables on Long Island

Company	Location	Telephone	Materials Accepted	Price	Materials Not Accepted
Amco Plastic Materials	Farmingdale	293-1600	polystyrene pet		plastic drink containers plastic bags
Anchor Waste Paper Corp.	Westbury	334-3132	newspapers	$.50/100 lb	
Brookhaven Recycling Corp.	Patchogue	475-4788	aluminum brass copper steel corrugated	must see must see must see must see $0	newspapers glass
DeWatteo Salvage Co., Inc.	W. Babylon	643-7940	high-grade paper corrugated aluminum aluminum cans ferrous metals	varies $0 $.35-.40/lb $.15/lb must see	newspaper glass
Ecosphere Recycling	Hicksville	935-5852	not recycling anymore		
Ed's Salvage, Inc.	Renkonkoma	981-5522	high-grade paper	varies	
Environmental Resource Recycling	Yaphank	924-3388	aluminum cans plastic shrink wrap large plastic bags soda bottles glass bottles (sorted by color) cardboard cases		milk bottles
E.W.G. Glass Recovery/ Jamaica Paper Stock	Jamaica	718-657-0900	sorted glass high-grade paper corrugated cans (small amts)	varies varies varies varies	newspapers
IPF Management	Great Neck	746-7575	newspapers corrugated computer paper other paper	$0 $10/ton $.30/lb $.01-.02/lb	metals glass
Jet Paper Stock	Central Islip	234-7100	corrugated news	$0 $0	

TABLE 6-8

Markets for Recyclables on Long Island
(Continued)

Company	Location	Telephone	Materials Accepted	Price	Materials Not Accepted
Lobosco	Flushing	718-358-2098	newspaper computer paper metals car batteries radiators	$.25/100 lb varies varies $1 varies	cardboard glass
M-B Recycling Unlimited	N. Bellmore	785-4044	newspaper cardboard	$.10/100 lb $0	
Mid Island Salvage Corp.	Deer Park	595-9819	metals		aluminum cans tin cans
North Shore Salvage Corp.	Freeport	623-4521	brass copper aluminum	$.35-.50/lb $.70-.90/lb $.38-.50/lb	paper
North Shore Salvage Corp.	New Hyde Park	746-8454	see above		
Omni Technical Services*	Uniondale	222-0708	commingled (glass & metal) newspapers	community pays: $35/ton (delivered to Omni) depends on contract terms	
Pinnacle Industries	Bohemia	589-5426	newspapers (clean and stacked)	$0	
P&P Paper Recycling	Old Bethpage	249-8577	no answer		
PK Metals	Coram	732-6403	aluminum (no cans) brass copper steel	$.40/lb $.35/lb $.60-.90/lb $.005-.02/lb	
Rutigliano Paper Stock	Westbury	334-3132	newspapers	$.50/100	
Segal Enterprises	Riverhead	727-6500	no answer		
Suffolk Tab Salvage, Inc.	Bayport	654-8605	high-grade paper	varies	newspapers

TABLE 6-8

Markets for Recyclables on Long Island
(Complete)

Company	Location	Telephone	Materials Accepted	Price	Materials Not Accepted
Twin County Recycling	Hicksville	935-5852	concrete asphalt	varies varies	
USA Recycling	Kings Park	368-5533	collects materials municipalities can't get rid of and arranges for disposal; municipalities pay $20/ton		
Westbury Paper Stock	Westbury	333-2211	newspaper high-grade paper corrugated	$0 $30-150/ton	

*Omni would investigate the feasibility of opening a small, satellite processing center in eastern Long Island if there would be a sufficient supply of recyclables.

arrangements need not be made when changing buyers. This flexibility is an advantage when markets go "soft".

For the future, it is anticipated that a regional marketing Co-op will assist with marketing responsibilities. A large Co-op should further insulate the Town's recycling program from market failure. Larger quantities give a Co-op more clout in the market place. A Co-op can deal with several buyers at the same time and can arrange long-term contracts which may add a certain degree of security.

6.8.2 Marketing Cooperatives

Municipalities in a region can join together in a single organization known as a marketing cooperative (CO-OP) which is responsible for marketing all of the recyclables collected in that region. A CO-OP has significant advantages based on its control over larger quantities of materials and the minimization of weekly or seasonal quantity fluctuations that the individual community may experience. Materials buyers are more willing to purchase from sellers which can consistently supply large quantities. For these reasons, CO-OPs can often maintain market outlets during poor market conditions and can command premium prices when markets are strong. A large CO-OP can also deal directly with the end-users (manufacturers who make the recyclables into new products), both domestic and foreign, thereby receiving the highest possible revenues for the recyclables. Ultimately, a CO-OP could also attract new end-users to a region with supply guarantees and financial incentives.

A significant drawback to developing and maintaining a marketing cooperative is the high level of cooperation between independent municipal bodies necessary to make a CO-OP effective. CO-OPs sometimes fail in the development stage due to an inability to reach agreements on essential organizational, administrative and budgeting issues.

A CO-OP in essence already exists in Southampton since the Town is taking responsibility for marketing recyclables collected in all of the villages and unincorporated areas. Larger marketing cooperatives including the five "East End" Towns or all of Suffolk County have been the subject of several meetings of the Town supervisors. The development of a CO-OP of this size, particularly a County-wide CO-OP, could be very

advantageous and should be vigorously pursued. However, to delay the development of Southampton's recycling program, including at least short-term independent market agreements, until a larger marketing CO-OP is formed may not be prudent at this time given the preliminary nature of these meetings and the wide degree of cooperation needed before such a CO-OP would become effective. The Town should proceed on its own and with the E2RA Towns to develop a recycling program agenda in parallel with negotiations for creating a regional CO-OP.

6.8.3 Processing

The most serious problem faced by municipal recycling programs when a market degenerates is the inability to find a buyer for the materials collected. This problem is in part due to the relatively low quality of materials separated by thousands of residents from the heterogeneous municipal waste stream. When demand shrinks or supply expands, buyers are more selective and will purchase only higher quality materials that do not require additional sorting and processing. In favorable market conditions, higher quality materials may command higher prices as well.

By processing the materials collected, Southampton would raise the quality of its recyclables, thereby improving marketability. Processing includes: sorting materials and removing contaminants by hand or mechanically; size reduction by crushing, chipping or shredding; finishing the product by screening; and baling or packaging it. Section 6.7 describes various recyclables processing systems that could be considered.

It is important to note that, although processing has several marketing advantages, processing can be quite costly and may not be necessary for certain materials. The cost of constructing and operating high level processing systems may be greater than the value it adds to the material or the added marketability security gained. Therefore, in some instances, it may not be advantageous to build or operate a MRF. Markets for certain materials may not require a highly processed material. For example, many large glass manufacturers have processing systems which crush the glass containers, remove metal contaminants and wash the crushed cullet prior to remanufacture. Market specifications should be ascer-

tained prior to facility design and implementation to determine the need for processing of each material.

Another significant factor in this cost/benefit analysis is the quantity of a particular material that is collected, since greater quantities typically reduce per-ton processing cost through economy of scale. See Section 6.9.2 for further discussion of the economics of MRF construction. Quantity information is important not only for sizing purposes, but also for determining whether certain high-cost processing alternatives will be cost-effective given the quantity of material available (see Section 9.2.1). The quantity of each material that will be recycled and when that material will be added to the program must be determined as accurately as possible to properly design the recycling facility. For these reasons, it is important to determine conclusively whether intermunicipal cooperation between the East End Towns or through the Brookhaven regional approach toward processing recyclables is a certainty and thus determine the quantities that will actually be collected prior to systems design and implementation.

6.8.4 Market Contracts vs. Spot Market

Although the task of marketing the Town's recyclables may be carried out by a regional cooperative in the future, the Town will be responsible for marketing its materials prior to the implementation of a CO-OP and in the case that a CO-OP cannot be implemented. There are two basic marketing approaches the Town can take: spot market selling and output contracts. Each has advantages and disadvantages depending on market conditions.

Spot market selling means selling an accumulated quantity of a material as it becomes available to whomever will pay the best price at the time. Selling on the spot market usually entails calling numerous known buyers to identify a suitable buyer who will pay the best price. Buyers can be end-users who remanufacture the material or a broker (middleman) who resells the material to an end-user. The spot market seller may choose to hold onto a particular store of material until there is short-term upward movement in price. The Town currently uses a modified spot market approach for marketing its recyclables. There are

not contracts, but relationships have been developed with one or two brokers for each material the Town collects. Other towns, such as Wellesley, MA have successfully used this approach aggressively for years in conjunction with their voluntary recycling program.

The advantage of selling on the spot market is that, in favorable market conditions, the highest price possible can be gotten on the spot market since there is strong demand. There are two basic disadvantages. First, the seller does not have a guaranteed buyer, and thus during poor market conditions, there may be significant difficulty experienced in finding a buyer. Secondly, an effective spot market seller may need to devote considerable man hours to brokering his or her materials and arranging for market transport.

To secure market outlets for the materials to be recycled, during periods of poor market conditions the Town might enter into contractual agreements with recyclables buyers. Without contracts, the Town's ability to market the materials would be subject to volatile market conditions. Selling materials on a spot-market basis often yields the higher revenues when markets are favorable. However, when markets are unfavorable it may not be possible to find buyers on the spot market, which may result in disposal of the separated recyclables.

Typical contracts of the industry do not lock the contracting parties to a specific price. Rather the price will fluctuate with the market and buyers may agree to a minimum price. The advantage of a long-term output contract is that the seller agrees to market its material with the buyer only, and the buyer agrees to take all material collected by the seller, i.e., the municipality, in all market climates.

Contracting with markets will need to be coordinated with the development of a marketing cooperative if one is developed. Until such a cooperative is organized, though, the Town can still gain a degree of greater market security by entering into short-term contracts with buyers, if they are available. A condition subsequent can be written into these contracts specifying contract termination when and if a marketing co-operative is ready to take over marketing tasks.

6.9 RECYCLABLES PROCESSING TECHNOLOGIES

6.9.1 Materials Processing Facilities

A Materials Recovery Facility (MRF) can be designed to handle the range of incoming source-separated recyclable materials expected to be part of the Southampton program, including provisions for expansion in size to accommodate additional material components and/or quantities at a future date. It is usual for MRF's to be divided into two discrete processing sections: one that handles paper-related materials and another that sorts bottles, cans, and other "hard recyclables."

Figure 6-5 illustrates a paper sorting and baling system for source separated paper. Incoming mixed paper passes through the picking station and, dependent upon the relative volumes of the components, either the product or the contaminant is picked. The paper classifications can be altered or combined to meet changing market conditions. Incoming pre-segregated paper bypasses the picking station and processing line and is fed directly to the baler. The non-paper contaminants are directed to a compactor for landfill disposal.

Figure 6-6 illustrates a cans, bottles, and plastics sorting and processing system for source-separated materials. Mixed cans, bottles, and plastics are mechanically conveyed through the processing system for sorting and preparation for market. Ferrous cans and other materials are removed from the feed stream magnetically and conveyed to a delabeling machine to improve can stock quality through removal of labels which otherwise contaminate the product. Once delabeled, the canstock is flattened and stored prior to shipping. Glass, plastics, and aluminum continue past an air knife where the plastics and aluminum are separated from the glass stream for further processing.

The glass continues on to a manual picking station where it is separated by color into green, flint, and amber. The color-separated glass is discharged to glass crushers where it is reduced in size to that required by the glass cullet market. Rotating screens that are a part of the glass-crushing equipment screen out labels and metal bottle tops and neck rings for disposal as residue. Crushed glass is discharged for storage prior to shipping. Broken glass not recovered at the picking

station is crushed separately and discharged for storage prior to shipping. Residues are collected from each of the glass crushers and discharged for storage prior to transport to disposal.

For plastics recovery, a vibrating screen (grizzly bar) separates oversize plastic containers (such as one-gallon milk jugs) from the remaining plastics and aluminum which continue on through the system. These materials are first flattened, then pneumatically conveyed to a nonferrous metals separator where the aluminum is separated from the plastics. The plastics streams are directed to a sorting station where further segregation takes place to meet specific market requirements.

A number of different configurations are possible, depending on how materials are delivered, handled, and transferred, and desired market product. The following section discusses some of the detailed functions of specific types of equipment that may be used in an MRF.

6.9.1.1 Materials Processing Equipment

The relatively undesirable nature of work in a materials recovery facility (MRF), along with the recognized interest in increasing the recycling of material, necessitates the use of automatic or semi-automatic machinery wherever reasonable and possible. Some of the equipment types currently in use in MRFs today are described below. These are generic descriptions. Equipment design may vary between vendors and depending the particular application for the equipment.

Air Classifiers

The objective of air classification is to separate mixed materials by one or more physical properties, including size, shape, density and aerodynamic characteristics. Types of air classifiers currently used in MRFs include:

- Vertical: Mixed materials are introduced into a vertical chamber through which air is either blown or drawn. Lighter particles rise while heavier ones fall. The lighter materials are primarily paper and plastic, while the heavier materials consist of glass and metals.

- Horizontal: Mixed materials are fed into the top of the air classification chamber at one end and are exposed to a horizontal air stream. High density materials fall through the air stream while the lighter ones are blown past one or more

FIGURE 6-5

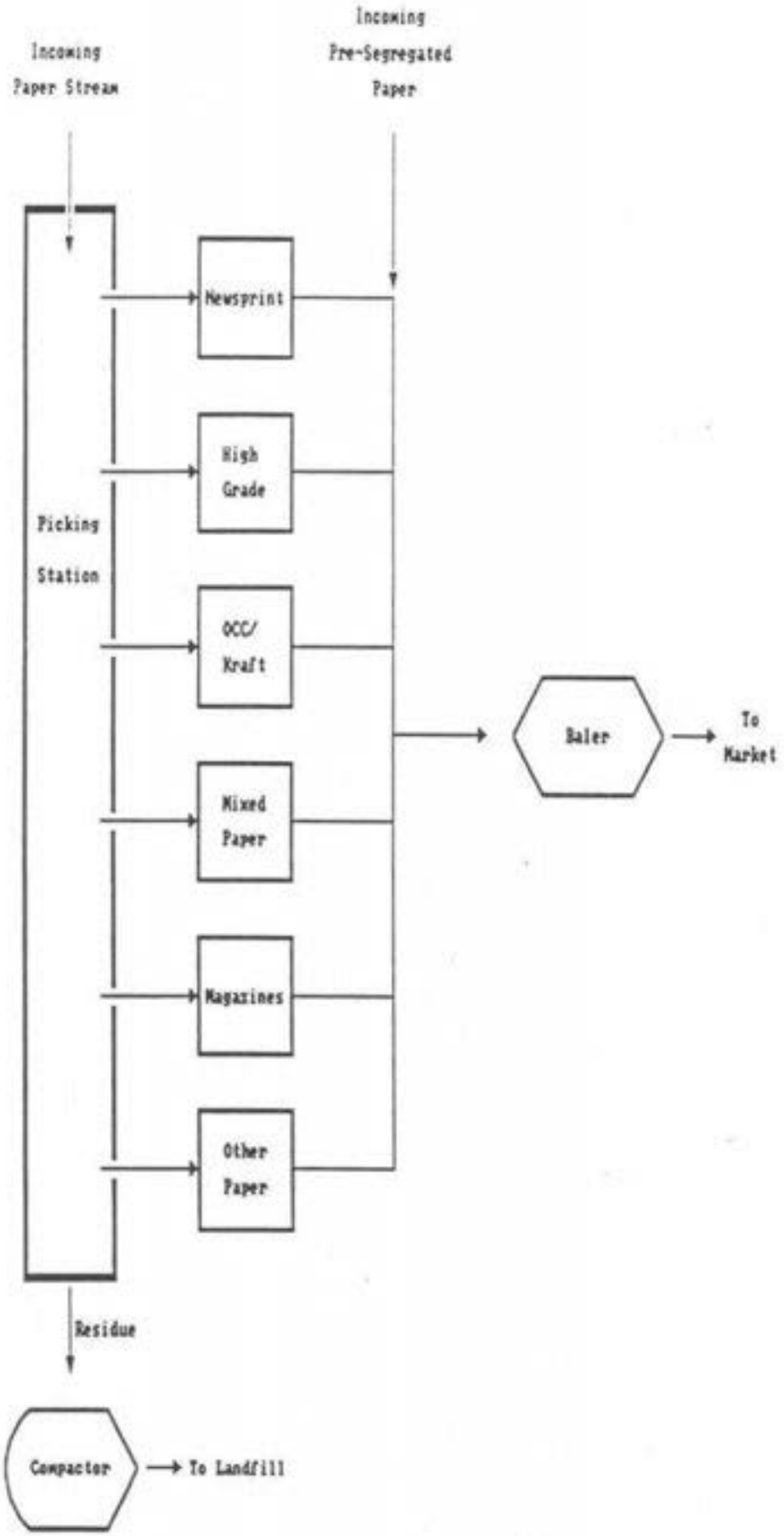

TOWN OF SOUTHAMPTON
SOLID WASTE MANAGEMENT PLAN
RECYCLABLE PAPER PROCESSING SYSTEM
FLOW DIAGRAM

FIGURE 6-6

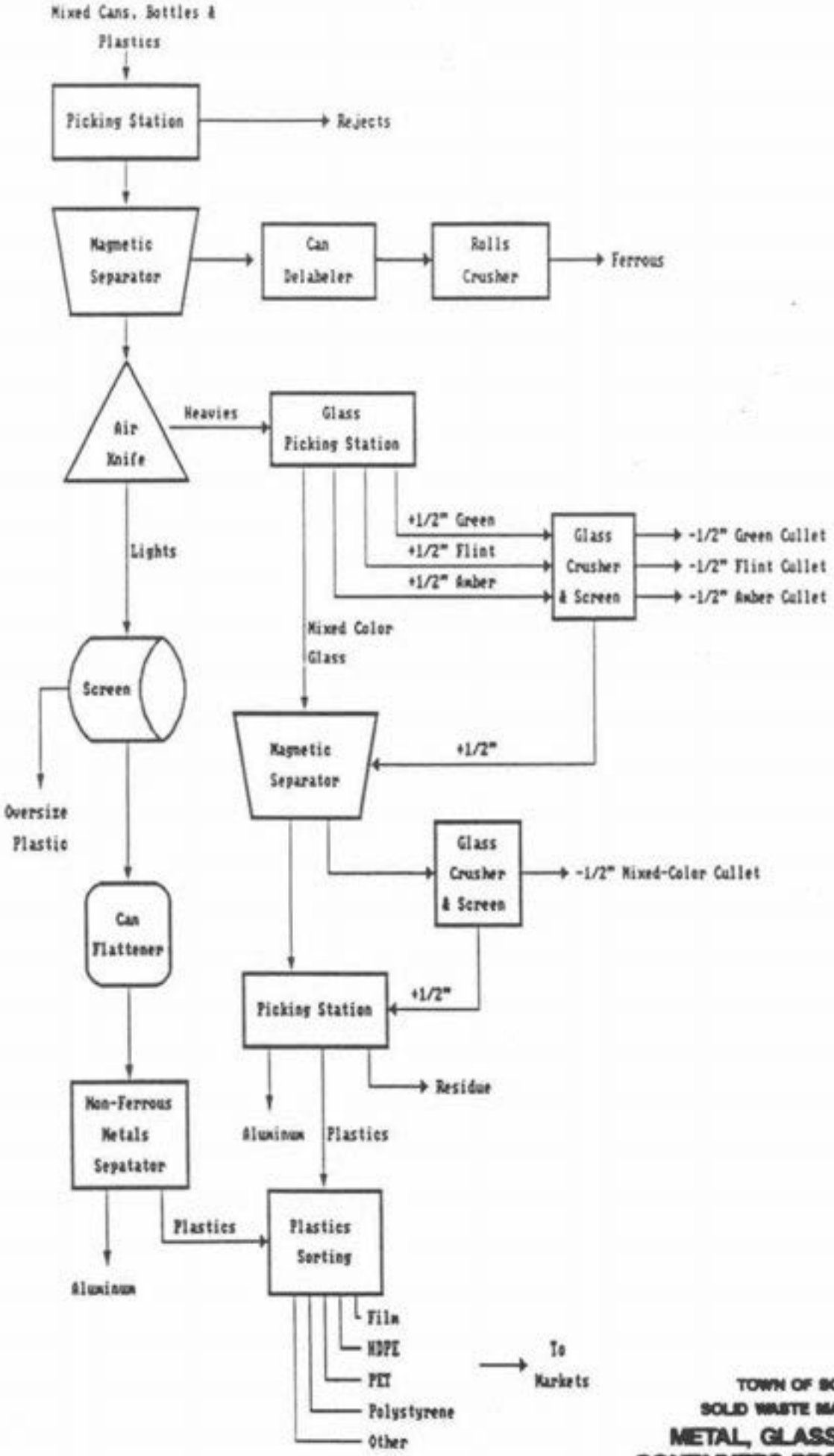

TOWN OF SOUTHAMPTON
SOLID WASTE MANAGEMENT PLAN
METAL, GLASS AND PLASTIC CONTAINERS PROCESSING SYSTEM FLOW DIAGRAM

dividers, thus separating the materials into two or more hoppers for removal by conveyors for further processing.

- Rotary Drum: The unit consists of an enclosed rotating drum with the upper end fitted into a vertical plenum. The heavier materials are tumbled toward the lower end of the drum and discharged while the lighter ones are air blown through the drum to the plenum where they fall into a hopper. The tumbling action results in freeing entrapped particles.

- Air Knife: The air knife is an air curtain propelling lighter materials out of the mixed material stream and is effective in the removal of organic matter (largely textiles) from entrainment with aluminum and other non-ferrous metals, in addition to separating light aluminum from heavier aluminum castings, copper, bronze, etc.

Magnetic Separators

This equipment is used to separate the magnetic ferrous fraction from the mixed material stream. An electromagnet or permanent-type magnet may be utilized in the head pulley of a conveyor, in one or more rotating drums placed in the vicinity of the conveyed mixed materials, or along a length of conveyor belt.

Can Delabeler

One configuration of this equipment combines a size reduction hammermill process for shredding cans and loosening labels, with an air classifier for the separation of the paper label from the shredded metal.

Can Crusher

This unit is utilized to reduce the volume otherwise taken up by aluminum or ferrous cans. The crushing mechanism generally consists of a steel drum with hardened cleats rotating against a pressure plate.

Can Flattener

A can flattener is a special baler designed specifically for flattening and baling cans. Typically, can volume is reduced by 70 to 90 percent by this process.

Glass Crushers

A glass crusher can be similar to a roll-type can crusher or it may be a hammermill-type of impact crusher in which a set of free swinging hammers, mounted to a high-speed rotating drum, smash the incoming glass which, when reduced to the proper size, falls through a grate and is collected for sale to market. Rotating screens are sometimes used as part

of the glass-crushing equipment to separate out labels and metal bottle tops.

Non-Ferrous (Aluminum) Metals Separator

A common automated approach to sorting out aluminum from other products utilizes the concept of eddy current separation. Aluminum is ejected from the mixed materials stream after passing through an electromagnetic flux.

Balers

Balers are used to compress materials, usually by employing a hydraulic ram at 2000 to 3500 psi hydraulic pressure, into relatively neat, dense packages either for transport to markets or for more efficient use of landfill. Some of the materials which have been successfully baled include:

- Paper
- Corrugated Cardboard
- Aluminum
- Light Gauge Ferrous
- Non-Ferrous Metals

Shredders may be used in conjunction with balers to improve the baling characteristics of the materials and to further increase the density of the bale.

6.9.2 Materials Recovery Facility Economics

Capital and operating costs for materials recovery facilities (MRF's) handling source separated recyclables will depend upon numerous parameters including the facility size required, types of materials being processed, revenues received, shifts operated, actual materials throughput and business arrangements negotiated. While the approximate amounts of materials that would be processed are indicated in Table 6-3, for both the Town alone, and for E2RA, the size and therefore the unit cost of processing is entirely dependent upon how much recyclable material can be collected.

Figure 6-7 indicates the likely range of total unit costs to process materials as a function of MRF size, including amortized capital, operating costs and revenues. Since it is clearly more economical to build a facility of reasonable size, there is considerable incentive to capture as much source separated material as possible. The potential problem is that having built a larger MRF, the unit cost per ton can be very high if recyclables are not captured as planned.

Therefore, it is very important and cost effective to devote sufficient resources and effort to recycling program promotion so that the planned MRF capacity is filled. To a certain extent, lower tonnage can be accommodated by reducing manual labor hours. However, this is limited by the necessary fixed equipment and building costs that will be incurred. The key to cost effective sizing will probably involve a careful evaluation of how quickly the five town's programs can produce significant materials, in combination with some flexibility to begin with a more modest MRF size and expand as need be.

6.9.3 Separated Organics Composting

One of the easiest and most cost-effective means of diverting wastes from disposal facilities is the recovery and utilization of yard waste. The quantities of yard debris disposed of in a community fluctuate widely from one part of the country to another. Results of waste characterization studies in Southampton indicate that yard debris comprises about 15 percent by weight of the total waste stream. Additionally, the proportion of yard debris that may be collected mixed with MSW also is a function of season. Typically, the largest quantities of grass and garden waste are generated between late spring and early fall. On the other hand, the majority of leaves are collected in the fall.

It has been estimated that the Town of Southampton generates on the order of 10,000 tons of yard debris per year. Currently, some of this yard debris is collected from the residents Town-wide by the Town Highway Department in the spring and fall, and then transported to the Landfill where they are stockpiled and partially decompose.

Because of the relative ease with which yard debris can be diverted from the landfill, hundreds of municipalities have developed yard debris

utilization programs. The impetus also is encouraged by legislative measures. The State of New Jersey banned the disposal of leaves in 1988. Other states that have passed legislation to ban the landfilling of yard debris in the near future include Minnesota, Wisconsin, and Illinois. Southampton has prohibited disposal of leaves and yard waste with mixed MSW, starting on June 15, 1989. All such waste must be separately delivered to the stock pile at the Landfill.

The systems for composting leaves range from the very simple to the more sophisticated. The very simple approach basically involves stacking the leaves and letting nature take its course. This is the current method used in Southampton. In this manner, the composting process can take up to 18 months. Unpleasant odors should be expected prior to and during turning. This approach may be reasonable in areas where sufficient buffer land is available. Because of the need to use the land where leaves are now stockpiled, the Town will no longer be able to continue this practice and will need to start a more reliable and sophisticated program. Where land is at a premium, the leaves are stacked and aerated by means of mechanical turners or blowers. Limiting factors such as moisture content, temperature and oxygen content are controlled such that the composting process is carried out in a matter of weeks. The process can be expedited by adding a source of nitrogen.

Mixed yard debris cannot be dealt with in the same manner as leaves. A few communities have opted to follow the "minimal-technology" approach. This generally involves minimal, if any, processing. The material is simply stacked in piles as high as 10 to 20 feet for periods of longer than 18 months. Because of the nature of the wastes (high carbon content, particularly in the form of lignin), this method has led to fires in some instances. Also, the high piles are unsightly and the yard debris is more subject to becoming wind borne.

The windrow system is the system most commonly adopted. Aeration can be accomplished by mechanical turning, by forced aeration, or by a combination of the two. Experience with forced aeration for this particular type of application has been less than desirable. The method leads to an excessive drying and cooling of the composting mass, especially when tree trimmings and dried vegetation (leaves, straw)

FIGURE 6-7

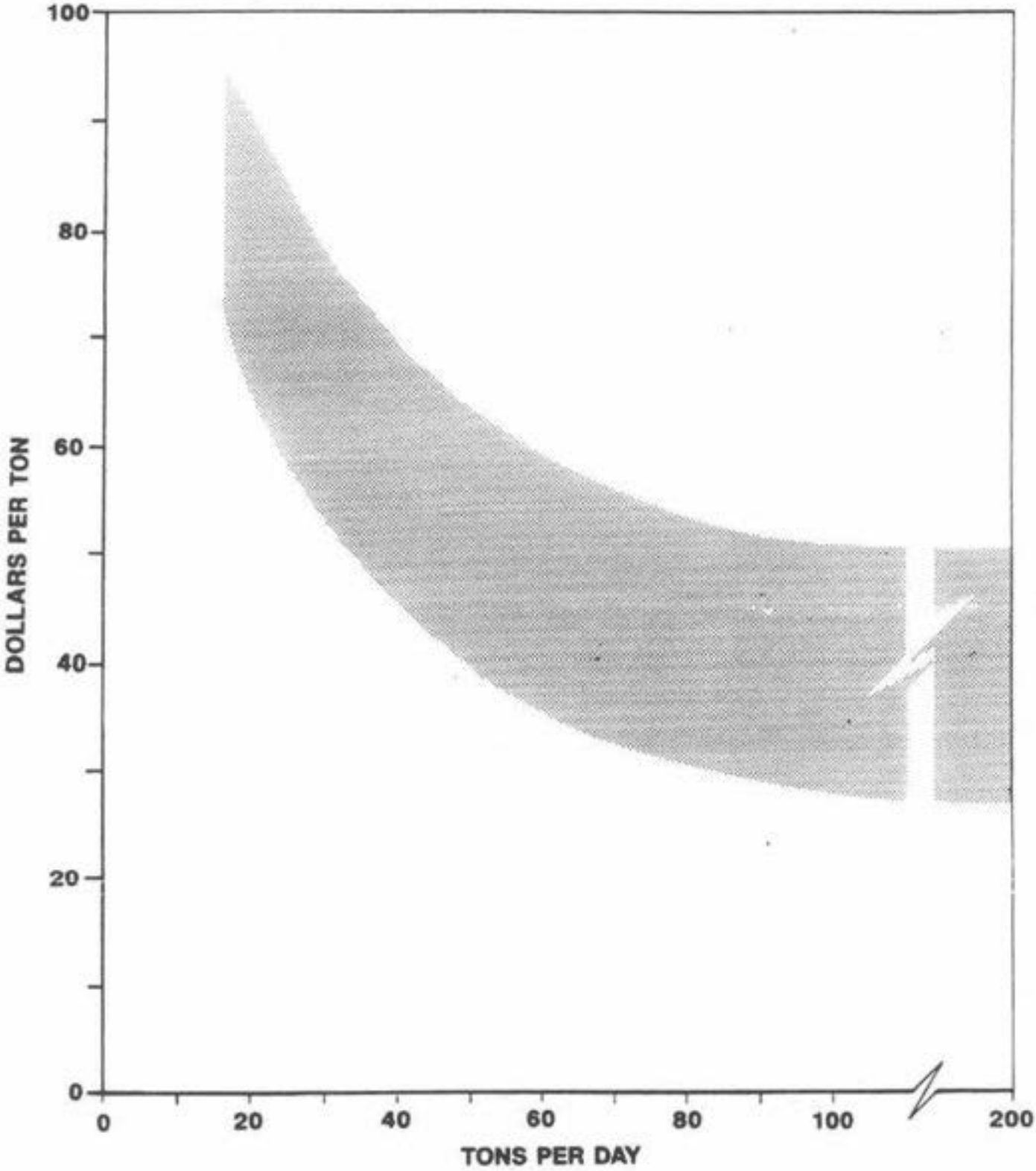

TOWN OF SOUTHAMPTON
SOLID WASTE ACTION MANAGEMENT PLAN

CAL RECOVERY SYSTEMS INCORPORATED

OVERALL COST PER TON
MRF PROCESSING

constitute a large fraction of the wastes. The reason for the drying and cooling is partially a result of the very porous nature of the wastes. The porosity not only permits relatively unimpeded movement of air but also diminishes the moisture holding capacity of the windrowed mass. The latter is due to the rapid percolation of water to the bottom and out of the windrow.

A shredder is essential for a long-term yard waste composting program. Moreover, the shredder must have the capacity to process the input intended for it. Despite the fact that this requirement seems so obvious as to render its mention superfluous, inadequacy of the shredder has been and is one of the more commonly encountered problems in projects involving the composting of park and garden debris. The grinder must be able to size reduce fairly large-size branches and brush, as well as twigs, tree clippings, and other woody material to a particle size small enough to permit easy manipulation and to encourage biological breakdown. In addition, the size reduction equipment should be sufficiently strong to deal with the occasional contaminants such as rocks, bricks, or pieces of metal. If the shredder is inadequate, the almost invariable outcome is an accumulation of branches and other woody debris that eventually becomes so great as to be unmanageable, and in some cases constitutes a serious fire hazard.

For small operations, turning can be satisfactorily done with the use of a front-end loader or a bulldozer equipped with a standard blade. For larger operations, a mechanical turner specifically designed for the task would be appropriate.

The need to maintain the 40 to 50 percent moisture content of the composting mass often is overlooked. Usually, the oversight has its origin in the absence of a conveniently accessible water source. Extending a water line to the composting site can be costly but may be necessary. Provisions should be made for the monitoring and adjusting of moisture content as well as other parameters of the composting process due to the fact that the water is essential for the biological activity upon which the system is based.

Unless undesirable elements have been allowed to contaminate the input wastes, the compost product is an excellent soil amendment. With proper screening the compost produce would be suitable for most landscaping and horticulatural applications. Considerations should be made for the handling of any rejects.

The composting of MSW and the co-composting of MSW and septage are discussed in Sections 7.1.2 and 7.1.3, respectively. Consideration may be given to the integration of a leaf and yard waste composting facility with that of an MSW and septage facility. See Figure H-3 (Appendix H), for a schematic of such a combined facility.

Pilot Yard Waste Composting

Yard wastes and other organic materials are currently stockpiled separately. When leaves are not processed, decomposition can take as much as three years. Since the Town is running out of space to continue in this way, Malcolm Pirnie has recommended that the Town begin a pilot, low technology windrow composting project at the North Sea site. Complete decomposition is accomplished in several months by windrowing and the finished compost (if screened) can be used for final cover on closed landfill sections, or can be sold or given away. Windrow composting is done by forming the organic materials into elongated piles, adding a certain quantity of water (organic materials should have a 50 to 60 percent by weight moisture content for optimum decomposition), and turning the piles occasionally with front end loaders to aerate the leaves. Shredding, screening and turning equipment should eventually be added to this program to enable the handling of farm wastes, brush, grass and landscaping trimmings. Since this equipment is expensive, and its proper selection is critical to success, professional guidance is recommended. Moreover, there is some potential for odors from grass composting and it is important that the program be designed to mitigate this issue. Cal Recovery Systems will likely assist in start-up and operation of the pilot composting program. Less than 3,000 cubic yards will be processed. Therefore, no Part 360 permit will be needed at this time.

6.9.4 Construction and Demolition Debris Processing

Construction and demolition debris (C&D) consists of various materials which, if properly sorted and processed, can be recycled. Section 3.2.4, Commercial and Industrial Wastes Recycling, described the current private efforts for recycling C&D in Southampton. Traditionally, since C&D has been viewed as an innocuous waste which does not require stringent regulation, C&D has been disposed of on-site or used as fill material.

However, this view is changing since C&D may pose health hazards, harbor rodents or may be considered an aesthetic nuisance. Effective December 31, 1988, the NYSDEC is regulating C&D landfilling under 6 NYCRR, Part 360-7. Also, given the high C&D generation rate (see Table 3-14) in Southampton and lack of available open space, it is advantageous to recycle as much C&D as possible.

C&D is typically collected by private carters separately from municipal waste since it is generated in large quantities at individual locations (see Section 3.2.4, Commercial and Industrial Wastes Recycling). Public works construction may also generate significant occasional quantities of C&D waste. One minor exception is the small amounts of C&D generated by homeowners through home improvement projects that may be collected together with household refuse.

An important step in recycling C&D debris is the segregation of the materials into the various recyclable components. C&D waste can be separated into four general categories for processing and marketing: wood, metals (which may be further sorted by type), rubble and the remainder. The first three categories are generally recyclable at this time. The remainder consists of materials for which feasible markets may not exist or waste which cannot be efficiently separated such as old roofing or lath and plaster debris. Other materials, such as plastics and cardboard, may also exist in large quantities depending on the type of construction taking place in the community and these materials may also be separated and recycled.

C&D debris can be sorted at one or two points prior to processing. The C&D waste hauler can be required to separate the materials prior to drop-off at a recycling center or C&D waste can be separated at a processing facility by hand or mechanically. The bulky, odd shapes of

C&D make conveyor picking systems used for commingled residential recyclables impractical for most C&D. Therefore, hand sorting is done on a flat open space. Front end loaders or refuse cranes handle bulky materials too large for hand sorting.

Selection of a sorting method depends on the composition of the C&D waste, availability of equipment, manpower and space, recycling goals and avoided disposal costs. Typically, the most effective method will be a combination of general pre-sorting by the C&D waste hauler and further sorting at the recycling center. This approach is currently used by George's Sanitation at its C&D transfer station.

The separated materials can be marketed as is, or undergo further processing. Processing usually consists of further sorting one or more of the general components to meet particular market specifications and or size-reducing or baling the material for various uses. Processing may be a necessity in order to market the materials or may prove to be a profit driven choice depending on price differentials for processed and unprocessed materials. The need for further sorting can best be determined on a daily basis during operations. Metals are the most likely material for further sorting. Size reduction by crushing, chipping or shredding is usually necessary for certain materials for recycling. Although bulky, uncrushed rubble may be used as fill for certain applications, if crushed, concrete and asphalt, can be used as an aggregate for making new asphalt and concrete products. Aggregate is a relatively valuable commodity on Long Island where crushed stone is not readily available. Few if any uses exist for bulky, unchipped wood waste. Chipped or shredded wood waste is useful as mulch, sludge composting bulking agent or as fuel for furnaces for heat or energy generation.

Processing needs are best determined by responding to market requirements both in general and on a day-to-day basis. As a general rule of thumb, the more highly processed the waste, the greater the likelihood of finding available markets and the higher revenues will be. On the other hand, processing can be costly and may not be necessary. The designers of a C&D recycling facility must be sensitive to these considerations and should design the facility with flexibility in mind. The manager of the C&D recycling facility must also be sensitive to all of

these considerations and should adapt facility operations to changing market needs.

6.10 ENVIRONMENTAL IMPACTS

6.10.1 Potential Environmental Impacts

Development of a source-separated waste processing system, while providing an environmentally sound waste disposal system, has the potential to adversely affect other environmental resources. These potential impacts are discussed below.

Air Quality

Materials Processing

Particulate emissions may be generated by material processing facilities. However, if the material handling and the processing activities are enclosed within a building and/or dust control systems are employed, particulate emissions can be controlled. Size reduction and screening operations are the usual generators of particulates. Besides dust control systems, operational controls also may be used to minimize the generation of fine airborne particulate matter.

Leaf and Yard Waste Composting

Leaf and yard waste composting operations can generate suspended particulate matter from size reduction and screening operations. The particulate emissions can be controlled by moistening of the material, pneumatic dust control systems, and operational controls that serve to minimize the generation of fine airborne particulate matter. Additionally, enclosing the operation serves to minimize the pollution of the environment with particulate matter.

Fugitive Dust

Materials Processing

Dust generation occurs as a consequence of unloading of recyclables, their subsequent handling by personnel and by rolling stock, and processing of the recyclables. If the operations are enclosed, little if any particulate pollution of the outside environment occurs. Pneumatic

dust collection equipment can be used if necessary to control particulate emissions from offending pieces of equipment, for example, from a glass crusher.

Leaf and Yard Waste Composting

Leaf and yard waste composting operations can generate substantial quantities of particulate emissions from the material handling, mechanical processing, and composting operations. Particulate emissions can be mitigated by:

1. Placing the operation on a paved or concrete surface, as opposed to a dirt surface, to minimize the generation of dust.

2. Enclosing the storage and processing operations.

3. Moistening the stored raw and processed material to minimize the potential for generation of airborne dust during subsequent handling of the material.

4. Limiting the degree of size reduction to the minimum required for maintaining the quality of the product.

5. Limiting the contamination of the organic waste by dust and dirt.

6. If processing of yard waste is conducted on a dirt surface, moistening the surface will mitigate the generation of nuisance dust.

Water Supply

Materials Processing

The mechanical handling of hard recyclables and the heterogeneous nature of those recyclables introduces the danger of fires at one or more points in the system. An adequate water supply is necessary for fire control purposes.

Leaf and Yard Waste Composting

In addition to a water supply for control of potential fires, the composting of leaf and yard waste requires substantial quantities of water. Water is required to achieve and maintain a moisture content of about 50 percent for the composting mass. This level of moisture is generally considered optimum for composting of leaf and yard waste.

Wastewater Disposal

Materials Processing

Other than washdown water and water used for fire control, materials processing requires no wastewater disposal capacity.

Leaf and Yard Waste Composting

Other than treatment and/or disposal of washdown water and of water used for fire control, composting operations require no wastewater disposal capacity if the operations are protected from rain and snow and the operations are conducted on an impervious surface. If any water in the form of leachate is generated from the composting operations, it can be collected and injected back into the composting mass.

6 NYCRR Section 360-5.5 governs operational requirements for yard waste composting facilities. Section 360-5.5(c) reads, "[d]rainage must be controlled to prevent leachate run-off from the site. Surface water drainage must be diverted away from the compost site." Subsection (b) indicates that leachate flow monitoring may be required for compost areas located on soils with a coefficient of permeability greater than $4x10^{-3}$ centimeters per second (cm/sec).

Noise

Materials Processing

Noise is generated in materials processing by collection vehicles and wheel loaders and by processing equipment. Materials processing facilities that utilize high rpm reduction devices, noise levels can be 90 to 100 dB in the vicinity of the equipment. Rolling stock and other processing equipment typically generate indoor noise levels in the range of 80 to 90 dB. If the processing operations are conducted indoors, noise levels are generally low at a distance of 100 feet from the operations.

Leaf and Yard Waste Composting

Composting operations generate noise during the mechanical turning of the piles. Diesel powered wheel loaders or special mechanical turners are usually employed for this purpose with the attendant noise levels. Static pile composting generates noise from the pneumatic blowers. The uncontrolled noise levels are generally low. In the case of large compost

production operations where large blowers are employed, silencers can be utilized to mitigate noise.

Odors

Materials Processing

A minimal odor level is experienced with materials processing operations. The odors can be mitigated by enclosing the processing system.

Leaf and Yard Waste Composting

Some odors may be generated from the composting operation, and malodorous gases will be generated if aerobic conditions are not maintained in the composting mass. Consequently, adequate process monitoring and aeration are required to mitigate the production of foul (i.e. anaerobic) odors. Various types of systems are potentially available for odor control. However, the proven operating record for such systems in composting facilities is slight, and considerable care in operations must be exercised, particularly if grass or manures are composted. Significant odors should not develop if the system is well designed and correctly operated.

Traffic

Materials Processing

Short-term traffic impacts from the construction of a material recovery facility would be of limited duration. Traffic would consist of that associated with the supply of the labor force, with deliveries of equipment and supplies to the site, and with earth moving activities. Traffic during start-up and commercial operation of the facility would consist of the arrival and departure of collection vehicles, autos, and trucks, and of vehicles removing recyclable products and process residues. The exact impact of the increased traffic activity depends upon such conditions as quantities of waste processed at the facility, design of the traffic pattern, and location of the facility.

Leaf and Yard Waste Composting

Traffic from the construction of a leaf and yard waste composting facility would be minimal, limited primarily to the supply of the labor force, to the delivery of processing equipment, and to earth moving activities. Traffic during the operation of the facility would consist of collection vehicles, autos, and trucks delivering wastes to the site and of vehicles of various design removing composted product and process residues from the operation. The exact traffic impacts would be influenced by the quantities of wastes to be processed, design of traffic patterns, and location of the facility.

Land Use and Aesthetics

Materials Processing

Material recovery facilities are industrial operations with substantial inflows and outflows of materials and the attendant levels of vehicular traffic. The feedstock is solid waste, although it is source separated, and consequently the use of the facility is as a solid waste facility. The feedstock characteristics and processing operations are consistent with land uses for municipal waste treatment facilities and for industrial processing operations. The impact of MRF's upon surrounding land uses can be minimized by appropriate setbacks from adjacent land use areas and by enclosing the operations. The aesthetic impacts can be minimized by architectural treatments and landscaping that conforms to the adjacent land uses.

Leaf and Yard Waste Composting

Leaf and yard waste composting operations are industrial/commercial operations utilizing vegetative waste materials. The feedstock has characteristics that are similar to those of agricultural crops. The composted product has properties similar to products sold by horticultural businesses. The aforementioned characteristics of leaf and yard waste composting operations make such operations compatible with a number of other operations, including nurseries, agricultural operations, and soil suppliers, as well as other types of waste treatment facilities. The integration of yard waste composting operations into surrounding compatible land uses can be effected by proper design of the operation

including enclosing the entire operation and suitable setbacks. Enclosing the operation with compatible architectural treatments and using adequate setbacks would enable yard waste composting facilities to be placed in many suitable areas.

6.10.2 Unavoidable Environmental Impacts

This section discusses those environmental impacts which cannot be avoided in developing source-separated waste processing systems.

Material Processing

Unavoidable environmental impacts associated with the implementation of a material recovery facility would include short term construction impacts, consumption of landfill space, and the commitment of resources for construction and operation activities. Construction of a facility may create short term impacts such as noise, fugitive dust, and soil erosion. Contaminants removed during the processing operation and wastage will require ultimate disposal in the landfill. The severity of all other impacts associated with the implementation of a material recovery facility can be mitigated to an acceptable level. Measures will be incorporated into the overall construction and operation plan to ensure all potential adverse impacts are mitigated to the greatest degree feasible.

Leaf and Yard Waste Composting

Unavoidable environmental impacts associated with the implementation of a leaf and yard waste composting facility would include short term construction impacts, consumption of landfill space, and the commitment of resources for construction and operation activities. Construction of a facility may create short term impacts such as noise, fugitive dust, and soil erosion. Contaminants removed during the processing operation and wastage will require ultimate disposal in a permitted landfill facility. The severity of all other impacts associated with the implementation of a leaf and yard waste composting facility can be mitigated to an acceptable level. Measures will be incorporated into the overall construction and operation plan to ensure all potential adverse impacts are mitigated to the greatest degree feasible.

6.10.3 Irreversible and Irretrievable Commitment of Resources

To a modest extent, development of source-separated waste processing facilities will result in minor loss of environmental resources, however, the overall effect is considered small. The short and long- term resources affected by development of a MRF or a leaf composting facility are identifed below.

Materials Processing

Resources expended during the implementation of a material recovery facility would include land utilized for site development and energy and financial resources utilized during both construction and operation phases of project implementation. In addition, the commitment of a labor force would be required during the construction phase. However, the development of such a facility would also result in the reduction of landfill requirements and would reduce the consumption of natural resources through the recycling of the recovered secondary materials.

Leaf and Yard Waste Composting

Resources expended during the implementation of a leaf and yard waste composting facility would include land utilized for site development and energy and financial resources utilized during both construction and operation phases of project implementation. In addition, the commitment of a labor force would be required during the construction phase. However, the development of such a facility would also result in the reduction of landfill requirements and would reduce the consumption of natural resources through the recycling of composted leaves and yard waste as a soil amendment.

6.10.4 Mitigating Measures

The following mitigating measures are methods that may be utilized to lessen the environmental impacts that may be associated with the development of a facility. Unless otherwise specified, mitigating measures described below are applicable to both materials processing and composting facilities.

Construction Impacts

Emissions of fugitive dust during construction would be minimized by applying water to any areas that may be potential sources of dust. A soil erosion control plan will be developed to reduce the potential for erosion of sediments off of the site during construction activities. Where appropriate, hay bales, silt fences, and vegetation will be used to aid in erosion control. Traffic impacts during construction would be short term in nature and can be minimized by careful planning and scheduling.

Operation Impacts

Residue and wastage generated during operation of the material recovery facility will require the commitment of landfill space. However, the amount of landfill space required will be much less than that which would be required for the disposal of the entire feedstock in the absence of processing. In addition, State regulations prohibit the disposa of unprocessed MSW on Long Island after 1992.

Air Quality

Materials Processing

Dust from MRF operations would be controlled by enclosing the tipping areas and processing equipment and by inclusion of dust collection systems on those pieces of equipment that would serve as generators of suspended particulates.

Leaf and Yard Waste Composting

Dust from leaf and yard waste operations would be controlled by a variety of methods. The selection of methods would depend upon the exact characteristics of the feedstock, the degree of contamination with dirt and other fine particulate matter, and whether receiving, processing, and storage areas are enclosed. Enclosing the operations is not usually needed to minimize particulate matter from escaping the site. Methods of particulate control include:

1. Moistening the feedstock to settle dust and reduce the liberation of particulates during processing.

2. Limiting the degree of size reduction to the minimum level that is consistent with the production of a product to specifications.

3. Use of dust collection systems on pieces of equipment that generate suspended particulates (e.g., size reduction and screening equipment).

Water Quality

Short term impacts to water quality may occur as a result of increased runoff and construction of a facility. However, steps would be taken through the development and implementation of a soil erosion and sediment control plan to prevent undue siltation and erosion during facility construction.

Impacts to water quality may occur over the life of the facility due to increased storm water runoff or point source discharges of process wastewater (e.g., leachate from compost piles) from the facility. These impacts would be limited through the use of appropriately designed and approved collection and discharge systems. To minimize leachate production from compost piles as a consequence of rain and snow, covered structures may be considered, however the water balance for leaf and yard waste is such that rain and snow water would be beneficial for the composting process and a covering is not necessary.

Noise

Noise generated during construction and operation of a facility would be controlled by using vibration control and attenuation techniques. Low noise producing equipment would be utilized where appropriate and equipment would be maintained in proper operating condition. Control of vehicular traffic on the site would also lessen the potential noise emissions. A buffer would also be incorporated in overall site development plans to help reduce the potential for off site noise impacts. Locating receiving and processing operations in enclosed structures would serve to minimize noise levels at the property boundary.

Traffic

While traffic impacts are site specific and therefore somewhat unknown, the likely traffic load would include bulk deliveries from the various Town drop-off centers, and as such would not involve large numbers of vehicles. However, a truck routing plan would take into consideration all potential impacts associated with facility operations. Some private automobiles and small trucks as well as large collection vehicles and large trucks would visit the site. The routing plan would address methods of minimizing traffic on and near the site.

6.10.5 Growth Inducing Aspects

The implementation of a material recovery facility or leaf and yard waste composting facility is not expected to have any growth inducing aspects associated with it. The implementation of such a project provides an environmentally sound method of solid waste management that is a necessary service required by the community.

6.10.6 Use and Conservation of Energy

Materials Processing

The amount of energy consumed by a material recovery facility is dependent upon the equipment selected, the amount of waste available for processing, and the manner of operation of the facility. The facility recovers recyclable materials which, when used as substitutes for virgin raw materials, conserve energy that otherwise would be expended obtaining and converting the virgin raw materials to consumer products. The implementation of such a material recovery facility will fulfill the State requirements for the management of solid waste. If these requirements are not met, the Town would be forced to dispose of its waste at a permitted facility located outside of the Town's boundaries. The transport of waste to such a facility could require a significant amount of energy.

Leaf and Yard Waste Composting

The energy usage of a leaf and yard waste composting facility is influenced by the amount of waste processed, the types of equipment employed, and the manner of operation of the facility. The facility produces a compost product that serves as a soil amendment. The energy

used to produce the compost displaces a portion of that used to acquire virgin high quality soil resources. Additionally, compost serves to upgrade marginal soils, thus improving their capacity to increase crop yields. Similar yields normally would require application of chemical agents and nutrients, each requiring energy resources for their production and application.

6.11 PROCUREMENT PRACTICES

As a market participant,the Town may have some influence in the market place to expand the use of recyclables in manufacturing by developing a procurement policy favorable to products made from recyclables. If local, state and federal governments implement such a policy, it is anticipated that increasing demand for finished products made from recyclables will in time increase demand for the "raw" recyclables thereby closing the recycling loop.

Some efforts in this direction have already been initiated by the Town Board. Recycled paper is used for letter head at the Town Hall. Other recyclable materials that could be targeted include recycled asphalt and crushed glass which can be used as aggregate in new asphalt for Town roads, and, if good quality products become available, this could also include retread tires and recycled motor oil for the Town vehicles. Other recycled products may also become available.

The Town can take several steps towards implementing a favorable recycled products procurement policy. A Town Board resolution can establish the Town's commitment to the policy. Materials specifications should be reviewed and modified to remove prejudicial requirements that favor virgin materials. The Town can actively pursue the policy by giving price preferences for products made from recycled materials or simply require that certain products the Town purchases contain a certain percent of recycled material. The New York State Legislature has adopted such a policy. Chapter 70 of the Laws of 1988 mandates that State agencies are to purchase recycled paper even if the comparable recycled product costs up to ten percent more than paper made from virgin fiber.

6.0R WASTE REDUCTION AND RECYCLING PROGRAM

The cornerstone of the Town's Revised SWAMP is the development and implementation of an intensive waste reduction and source-separation recycling and composting program for an increasing number of materials. This will require amendment to the Town's mandatory source-separation law, as well as aggressive educational and enforcement actions. The following section discusses the Town's proposed programs for waste reduction and for source separating, collecting, processing and marketing recyclable materials.

6.1R WASTE REDUCTION

The Town is committed to focusing on waste reduction as an important component to its long-term solid waste management plan. Waste reduction at the commercial level occurs through the design, manufacture, and packaging of products with minimum toxic content, minimum volume of material, and/or a longer useful life. Excessive packaging, disposable products, and single service items comprise that portion of the waste stream which is most typically the target of waste reduction efforts. Waste reduction at the residential level, and to some extent at the commercial level as well, occurs through selective buying patterns and reuse of products and materials. Septage waste is the only material not susceptible to waste reduction. Table 6R-1 provides a summary of the estimated solid waste generated after waste reduction has occurred. Waste reduction rates shown in Table 6R-1 are based on the State goals of 10 percent waste reduction by 1997. This 10 percent waste reduction goal is to be achieved primarily through State initiatives to reduce the per capita generation of packaging waste.

In addition to its current educational programs that encourage home composting and consumer purchasing of environmentally sensitive products, the Town will continue its waste reduction initiatives through additional educational programs and legislation. As described below, the Town will enact additional local ordinances, continue leadership in the E2RA, provide financial incentives and disincentives to ensure enhancement of its solid waste management program, and expand school curriculuae in an effort to develop waste reduction initiatives. The Town's efforts will be aimed at both the residential and commercial sectors in order to maximize waste reduction activities. To further reduce the amount of waste

TABLE 6B-1
TOWN OF SOUTHAMPTON
ESTIMATED WASTE GENERATION AFTER WASTE REDUCTION (1)

MATERIALS	1991 (TONS)	1992 (TONS)	1993 (TONS)	1994 (TONS)	1995 (TONS)	1996 (TONS)	1997 (TONS)	1998 (TONS)	1999 (TONS)	2000 (TONS)
THEORETICAL WASTE GENERATED	96,070	96,130	97,590	98,360	99,100	100,040	100,990	101,930	102,920	103,900
PLANNED WASTE REDUCTION	NA	5%	6%	7%	8%	9%	10%	10%	10%	10%
MRF MATERIALS										
Newspaper	4,476	4,286	4,274	4,262	4,247	4,241	4,234	4,274	4,315	4,356
Cardboard	11,381	10,896	10,865	10,834	10,798	10,782	10,765	10,867	10,970	11,075
Clear Glass	2,883	2,760	2,753	2,745	2,736	2,731	2,727	2,753	2,779	2,806
Brown Glass	607	581	579	578	576	575	574	580	585	591
Green Glass	1,821	1,743	1,738	1,734	1,728	1,725	1,722	1,739	1,755	1,772
Steel Cans	2,428	2,324	2,318	2,311	2,304	2,300	2,296	2,318	2,340	2,363
Bimetal Cans	531	508	507	506	504	503	502	507	512	517
Aluminum Cans	683	654	652	650	648	647	646	652	658	664
Office Paper	3,869	3,705	3,694	3,684	3,671	3,666	3,660	3,695	3,730	3,765
HDPE Plastic	531	508	507	506	504	503	502	507	512	517
PET Plastic	76	73	72	72	72	72	72	72	73	74
Subtotal	29,286	28,039	27,961	27,881	27,788	27,746	27,701	27,964	28,230	28,499
LEAF/YARD WASTE COMPOSTING										
Leaf/Yard Waste	11,305	10,823	10,795	10,762	10,726	10,710	10,693	10,794	10,897	11,001
INDOOR ORGANIC COMPOSTING										
Contaminated Paper	6,373	6,102	6,085	6,067	6,047	6,038	6,028	6,085	6,143	6,202
Food	6,221	5,956	5,940	5,923	5,903	5,894	5,885	5,941	5,997	6,054
Other Organics	3,262	3,123	3,115	3,106	3,096	3,091	3,086	3,115	3,145	3,175
Subtotal	15,857	15,181	15,139	15,096	15,046	15,023	14,999	15,141	15,285	15,431
DIRECT TOWN MARKETING										
White Goods	1,366	1,307	1,304	1,300	1,296	1,294	1,292	1,304	1,316	1,329
Tires	152	145	145	144	144	144	144	145	146	148
Subtotal	1,517	1,453	1,449	1,445	1,440	1,438	1,435	1,449	1,463	1,477
OTHER WASTE RECYCLING										
Textiles	1,745	1,671	1,666	1,661	1,656	1,653	1,651	1,666	1,682	1,698
Wood Waste	2,883	2,760	2,753	2,745	2,736	2,731	2,727	2,753	2,779	2,806
Soil	1,214	1,162	1,159	1,156	1,152	1,150	1,148	1,159	1,170	1,181
Other Paper	5,766	5,521	5,505	5,489	5,471	5,463	5,454	5,506	5,558	5,611
Other Plastics	4,097	3,922	3,912	3,900	3,887	3,882	3,875	3,912	3,949	3,987
Other Glass	1,214	1,162	1,159	1,156	1,152	1,150	1,148	1,159	1,170	1,181
Other Metals	759	726	724	722	720	719	718	724	731	738
Other Inorganics	228	218	217	217	216	216	215	217	219	221
Subtotal	17,905	17,143	17,095	17,046	16,989	16,964	16,936	17,097	17,260	17,424
WASTE FOR PRIVATE PROCESSING										
C&D Waste	20,000	19,148	19,095	19,040	18,977	18,948	18,917	19,097	19,279	19,463
Septage Waste	200	202	203	205	206	208	210	212	214	216
Subtotal	20,200	19,350	19,298	19,245	19,183	19,156	19,128	19,310	19,493	19,679
REMAINING WASTE	96,070	91,989	91,735	91,475	91,172	91,036	90,891	91,755	92,628	93,510
NET WASTE REDUCTION	NA	4,841	5,855	6,885	7,928	9,004	10,099	10,195	10,292	10,390

NOTE: (1) Waste stream reduction is based on State goals of 10 percent waste reduction by 1997. No reduction in septage occurs.

TABLE 6R-1
TOWN OF SOUTHAMPTON
ESTIMATED WASTE GENERATION AFTER WASTE REDUCTION (1)

MATERIALS	2001 (TONS)	2002 (TONS)	2003 (TONS)	2004 (TONS)	2005 (TONS)	2006 (TONS)	2007 (TONS)	2008 (TONS)	2009 (TONS)	2010 (TONS)
THEORETICAL WASTE GENERATED	105,160	106,430	107,720	109,020	110,300	111,510	112,740	113,990	115,250	116,500
PLANNED WASTE REDUCTION	10%	10%	10%	10%	10%	10%	10%	10%	10%	10%
MRF MATERIALS										
Newspaper	4,409	4,462	4,516	4,571	4,624	4,675	4,727	4,779	4,831	4,884
Cardboard	11,209	11,344	11,482	11,620	11,757	11,886	12,017	12,149	12,282	12,418
Clear Glass	2,840	2,874	2,909	2,944	2,978	3,011	3,044	3,078	3,112	3,146
Brown Glass	598	605	612	620	627	634	641	648	655	662
Green Glass	1,793	1,815	1,837	1,859	1,881	1,902	1,923	1,944	1,965	1,987
Steel Cans	2,391	2,420	2,449	2,479	2,508	2,536	2,564	2,592	2,620	2,649
Bimetal Cans	523	529	536	542	549	555	561	567	573	579
Aluminum Cans	673	681	689	697	705	713	721	729	737	745
Office Paper	3,811	3,857	3,904	3,951	3,997	4,041	4,086	4,131	4,176	4,222
HDPE Plastic	523	529	536	542	549	555	561	567	573	579
PET Plastic	75	76	77	77	78	79	80	81	82	83
Subtotal	28,844	29,193	29,547	29,903	30,254	30,586	30,924	31,264	31,607	31,955
LEAF/YARD WASTE COMPOSTING										
Leaf/Yard Waste	11,134	11,269	11,405	11,543	11,678	11,807	11,937	12,068	12,200	12,335
INDOOR ORGANIC COMPOSTING										
Contaminated Paper	6,277	6,353	6,430	6,507	6,584	6,656	6,729	6,803	6,878	6,954
Food	6,128	6,202	6,277	6,352	6,427	6,498	6,569	6,642	6,714	6,788
Other Organics	3,213	3,252	3,291	3,331	3,370	3,407	3,445	3,483	3,521	3,560
Subtotal	15,618	15,806	15,998	16,191	16,381	16,561	16,744	16,928	17,113	17,302
DIRECT TOWN MARKETING										
White Goods	1,345	1,361	1,378	1,394	1,411	1,426	1,442	1,458	1,474	1,490
Tires	149	151	153	155	157	158	160	162	164	166
Subtotal	1,495	1,513	1,531	1,549	1,568	1,585	1,602	1,620	1,638	1,656
OTHER WASTE RECYCLING										
Textiles	1,719	1,739	1,761	1,782	1,805	1,822	1,843	1,863	1,883	1,904
Wood Waste	2,840	2,874	2,909	2,944	2,978	3,011	3,044	3,078	3,112	3,146
Soil	1,196	1,210	1,225	1,240	1,254	1,268	1,282	1,296	1,310	1,325
Other Paper	5,679	5,748	5,817	5,888	5,957	6,022	6,089	6,156	6,223	6,292
Other Plastics	4,095	4,084	4,153	4,183	4,232	4,279	4,326	4,374	4,422	4,470
Other Glass	1,196	1,210	1,225	1,240	1,254	1,268	1,282	1,296	1,310	1,325
Other Metals	747	756	765	775	784	792	801	810	819	828
Other Inorganics	224	227	230	232	235	238	240	243	246	248
Subtotal	17,635	17,848	18,065	18,283	18,497	18,700	18,907	19,115	19,324	19,537
WASTE FOR PRIVATE PROCESSING										
C&D Waste	19,699	19,936	20,178	20,422	20,661	20,888	21,118	21,351	21,585	21,823
Septage Waste	219	222	224	227	230	232	235	237	240	243
Subtotal	19,918	20,158	20,402	20,649	20,891	21,120	21,353	21,588	21,825	22,065
REMAINING WASTE	94,644	95,787	96,948	98,118	99,270	100,359	101,466	102,582	103,707	104,850
NET WASTE REDUCTION	10,516	10,643	10,772	10,902	11,030	11,151	11,274	11,398	11,523	11,650

NOTE: (1) Waste stream reduction is based on State goals of 10 percent waste reduction by 1997. No reduction in septage occurs.

brought to Cell No. 3, tip fees at the facility have been increased significantly, further promoting the removal of recyclable materials from the landfilled waste stream. In 1989, the tip fee at the landfill was $25 per ton. Currently, it stands at $50 per ton, and will be raised to $60 per ton in January 1993. As discussed in Section 3.3R, waste reduction activities are intended to result in a ten percent reduction of waste by 1997.

6.1.1R Public Education

A critical element of any waste reduction program is the ongoing effort to educate the public on the importance of waste reduction and on methods of reducing waste produced. These educational and promotional efforts will be conducted together with the programs outlined in Section 6.7R. Among the program elements will be waste reduction seminars for high school students. Specifically, these seminars will discuss consumer choices and environmental shopping, or in other words "precycling." Students will be made aware of the role of consumers in product choice and of the ability of consumers to reduce their waste generation through developing environmentally aware shopping habits. School seminars will be initiated during the 1993 school year and continue throughout the 20-year planning period.

A media campaign for public outreach and education has already been developed with assistance from the E2RA. The current media campaign, which was initiated in 1991, specifically includes a recycling suggestion contest, a recycling survey, and various fliers and brochures sent to all residents. Additional programs will be instituted to promote waste reduction through development of posters for distribution to schools, storefronts, and interested civic groups.

6.1.2R Financial Incentives and Disincentives

The possibility of tax credits and/or exemptions to companies and institutions that follow specific waste reduction or source separation procedures for manufacturing or consuming are currently being evaluated. These activities may be implemented if recommended as a viable waste reduction strategy.

In addition to tax credits/exemptions, increasing private carter collection fees will encourage participation in waste reduction. Private carter rates are typically based on volume. The commercial institutions that reduce waste generation will experience a significant corresponding reduction in the volume of garbage collected by the private carter,

and therefore a lower collection fee. Moreover, the increase in tipping fees charged by the Town, along with the unavailability of other low-cost disposal options, will exert the necessary upward pressure on collection fees charged by private carters that will result in waste reduction.

6.1.3R Regulations

The Town's government can have a positive impact on the waste stream by adopting procurement procedures and practices that encourage waste reduction. The Town will implement the following procurement procedures and practices as part of its waste reduction strategy:

- procurement preferences for recycled products;
- buying in bulk;
- using longer-life products (i.e., durable, not disposable); and
- using two-sided copies in all offices.

The Town has begun to implement these practices and will continue them throughout the 20-year planning period. In addition, the New York State Environmental Facilities Corporation (NYSEFC) currently offers a waste auditing service to businesses. This service typically consist of site visits, waste audits, waste reduction recommendations, and recycling markets information. Through public education, technical assistance programs, and possible tax incentives, the Town will promote the use of the services available through the NYSEFC for local businesses and institutions.

Certain government bodies (such as Suffolk County, NY) have recently adopted policies or ordinances requiring the use of locally generated compost for County or local projects. The Town of Southampton will adopt a similar policy, requiring the use of compost generated by the Town in local government projects as conducted by the Departments of Public Works, Transportation, Parks and Recreation, or other government agencies.

6.2R SOURCE SEPARATED RECYCLABLES

This section describes the program the Town has selected for source separation of the recyclable materials generated within the Town that will be marketed to private companies for processing.

6.2.1R Collection

The basic framework for collection of the source separated recyclables has been in place since 1988. Private carters collect cans, glass containers, bundled newspaper and cardboard at the curbside. In addition to these recyclables, the Town's source separation laws mandate the separation of HDPE and PET plastics, aluminum, and mixed paper. Refer to Appendix R-J for a copy of Chapter 205, Landfills, Transfer Stations and Scavenger Waste, of the Southampton Code. In adopting these mandatory recycling laws, the Town developed an operations program with its private carters to facilitate curbside collection and develop promotional materials to enhance the effectiveness of the program.

Self-haulers will continue to use the recyclables drop-off facilities located at North Sea, Hampton Bays and Westhampton Beach to deposit their recyclables. The drop-off facilities include roll-off containers for newspaper, cardboard, tin cans, glass, mixed plastics, office paper, tires, white goods, scrap metal, and waste oil. In an effort to further enhance its recycling program, the Town constructed an easy access, bi-level drop-off facility at the North Sea Landfill for both residential self-haulers and private carters to deposit recyclables.

Similarly, the Town recently added roll-off containers at each of its drop-off facilities for "junk mail" and other low grade paper products in an effort to continue increasing the Town's recycling rate. Through the Town's encouragement, many private carters have also agreed to add the low grade paper wastes to their curbside pickups. The addition of facilities for source separation of other components of the Town's waste stream will be evaluated and implemented as markets for such components become available.

6.2.2R Processing and Storage

The Town has not had to process any of the source-separated recyclables prior to marketing. The Town will continue to market these source-separated recyclables as it has done over the past several years. The Town is prepared to add recyclables processing to its program if necessary to enhance the marketing efforts for these materials. However, at the

present time, no such additional processing is required. Equipment and specifications required for such further processing will be determined once the Town concludes what recyclables processing is necessary.

All source separated recyclables that are either collected at the curbside or deposited at the drop-off facilities will be brought to the Source Separated Recyclables Transfer Operation Area included as part of the Town's proposed integrated facility and deposited into respective roll-off containers. Private carters will bring all source separated recyclables collected at the curbside directly to the Source-Separated Recyclables Transfer Operation Area while the Town will transfer all the recyclables collected at the drop-off facilities throughout the Town. As the roll-off containers reach capacity, they will be transferred to each recyclable's respective market. Transportation arrangements will vary, depending upon markets used.

6.3R SOURCE-SEPARATED LEAF AND YARD WASTE

This section describes the program the Town has selected for source separation of leaf and yard waste that will be composted at the Town's proposed integrated waste management facility.

6.3.1R Collection

Source separation of leaf and yard waste will be the responsibility of homeowners, landscapers, and other entities generating this type of waste. Local mandatory source separation laws are currently being amended to include leaf and yard waste. Once the leaf and yard waste is source-separated, the waste generator will place the leaf and yard waste into biodegradable recycling bags for collection. Self-haulers will continue to use the drop-off facilities to deposit their source-separated leaf and yard waste. Private carters will collect their customers' bagged leaf and yard waste at the curbside and deliver it to the Tipping Floor of the proposed facility.

6.3.2R Processing and Storage

After delivery to the Tipping Floor, the collected leaf and yard waste will be segregated and transferred to an Outdoor Leaf and Yard Waste Composting Operations Area (Outdoor Composting Area) for subsequent processing. Once the composting process

is completed, the finished product will be stored in piles until it is supplied to the appropriate markets.

6.4R SOURCE SEPARATED ORGANICS

This section describes the proposed program the Town has selected for source separation of selective organic wastes to be composted at the Town's proposed integrated waste management facility. Selective organic waste will consist primarily of soiled paper (i.e., contaminated paper that cannot be recycled) and food waste, in addition to leaf and yard waste as described above.

6.4.1R Collection

Source separation of selective organic waste will be the responsibility of homeowners and other entities generating this type of waste. Local mandatory source-separation laws are currently being amended to include contaminated paper and food waste. Once the selective organic waste is source separated, the waste generator will place the selective organic waste into biodegradable paper recycling bags for collection. Self-haulers will continue to use the drop-off facilities to deposit their source-separated selective organic waste. Private carters will collect their customers' bagged selective organic waste, along with the remaining non-organic and recyclable wastes, at the curbside.

6.4.2R Processing and Storage

All source-separated selective organic waste that is collected at the curbside or deposited at the drop-off facilities will be brought to the Tipping Floor of the proposed facility. After delivery to the Tipping Floor, the collected organic waste will be segregated and transferred to the Indoor Organic Waste Composting Area (Indoor Composting Area) for subsequent processing. Composting of source separated organic materials will be accomplished through the use of the windrow composting method. The material will be subject to pre-processing as necessary to remove errant contaminants. Organic materials will be moved by conveyors from the Tipping Floor to a system of shredders and trommels. Once shredded, the organic material will be formed into windrows. Windrow piles will be monitored and heated as necessary to ensure proper temperature, moisture, and other chemical conditions. Piles will be turned as required using windrow turning equipment.

Once the material is composted, the finished product will be tested in accordance with NYSDEC guidelines, stockpiled, and stored until it is transferred to the respective markets.

6.5R COMMERCIAL SECTOR RECYCLING

This section describes the Town's implementation approach for initiating a successful commercial sector recycling effort. The commercial sector includes commercial, institutional, and non-hazardous industrial waste generators. To date, there has been no formal means of tracking commercial recycling program progress, as each establishment generally markets source separated materials directly themselves. However, it is known that large quantities of commercial sector corrugated cardboard, office paper, and C&D waste has been consistently recycled on an ongoing basis, without passing through Town controlled transfer operations.

6.5.1R Collection

Under the Town's integrated solid waste management program, individual commercial establishments will be responsible for segregating recyclables in accordance with the proposed mandatory source separation laws. However, the collection of the commercial sector recyclables will remain the responsibility of private carters throughout the 20-year planning period. Individual commercial establishments, along with their carters, will remain responsible for establishing the collection procedures for the recyclables. Recyclables will be consolidated and stored on-site until collected by the private carter. Private carters may choose to use any form of collection suited to their needs (i.e., compartmentalized collection vehicles, compactor trucks, etc.).

6.5.2R Audit and Management System

The Town is not planning to require all commercially generated recyclables to be collected and transferred to the Town's proposed facility. However, the Town does plan to manage the commercial sector wastes through various measures. As a first step, Town enforcement efforts will be intensified. Stiff fines will be imposed on those individuals and establishments that do not comply with the Town's mandatory source-separation laws. An audit system will be instituted to track commercial sector recycling efforts. All commercial establishments and private carters must provide the Town with weight receipts for all

materials that are segregated and marketed directly. This will provide the Town with information on the quantity of materials being recycled in commercial and industrial establishments.

In order to encourage commercial sector recycling, technical assistance, program promotion, and recognition awards will be offered to individual establishments. Recycling seminars will be held for local businesses. These seminars will provide commercial establishments with technical assistance in program development, implementation, vendor/market services, and employee education/program promotion. Awards will be offered to individuals and/or businesses whose recycling efforts have been shown to be exemplary. This will provide recognition and positive reinforcement to those establishments which are conducting successful recycling activities. The program will also serve to promote recycling activities and successes.

6.6R MATERIALS RECOVERY

The quantity of the recyclable, leaf and yard waste and organic materials that can be recovered from the waste stream after waste reduction have been estimated through a recovery rate analysis. This analysis encompasses estimating the quantity of materials that are likely to be recovered from the Town's waste stream as a result of the Town's proposed integrated solid waste management program. Historical tonnage information for all materials recycled, composted, and processed from 1987 through 1991 was used to determine initial recovery rates and the rate of increase throughout the twenty-year planning period. Because substantial and complete data for comparable aggressive materials recovery programs do not exist at this time, various assumptions have been made in order to generate the Town's future recovery rates. These assumptions include:

- Implementation of all activities according to the schedule provided in Section 11.0R.
- Private sector recycling will increase steadily due to expanded promotional efforts and continued strong markets for recyclable materials, particularly for office paper and cardboard.
- The commercial and industrial establishments will be attracted to recycling as a result of competitive market forces in conjunction with competitively priced

municipal disposal and recycling services, public education, and technical assistance programs.

- Effective enforcement of mandatory source-separation laws will occur.
- Market demand at or above 1992 levels will economically justify the recovery of all targeted materials.

The recovery rate projections presented in Table 6R-2 provide an "educated guess" based on the best current data available. Given the use of assumptions and accompanying uncertainty, these projections should be viewed as nothing more than educated estimates.

The results of this analysis, as summarized in Table 6R-2, reveal that the Town should be able to achieve substantial recovery rates for various key elements of its program. Total reduction/recycling rates are expected to increase from 26 percent in 1991 to 47 percent in 1993, 56 percent in 1994, and 76 percent and 84 percent in 1995 and 2010 respectively. When recycling is maximized in the Town, approximately 90 percent of the newspapers, leaf and yard wastes, white goods, tires and the organic fraction of Southampton's waste stream are expected to be recovered. Glass, corrugated cardboard, office paper, other paper, food, and certain metals and inorganics should be recoverable at a 60 to 80 percent range. Recovery of metal cans and plastic is restricted to the 40 to 50 percent range largely due to material contamination. Other more difficult to recover materials include contaminated paper, textiles, and wood. These materials are expected to be recovered at a 30 to 50 percent rate. Additionally, it is estimated that approximately 75 percent of the C&D debris generated within the Town will be recycled throughout the planning period.

6.7R MATERIALS MARKETING

This section updates the available market information for recyclables and compost on and around Long Island. As a result of a telephone survey conducted during February 1991 existing markets located on Long Island and in the greater New York Metropolitan Area were identified. This information includes market locations, material specifications, unit prices, transportation requirements, market services offered, and projected market trends. Other relevant market considerations presented in this section include the processing requirements to satisfy various market specifications. Information regarding

TABLE 6R-2
TOWN OF SOUTHAMPTON
ESTIMATED MATERIAL RECOVERY PROJECTIONS (1)

MATERIALS	1991 WASTE GENERATED (TONS)	1991 PERCENT RECOVERY	1991 MATERIALS RECOVERED (TONS)	1992 WASTE GENERATED (TONS)	1992 PERCENT RECOVERY	1992 MATERIALS RECOVERED (TONS)
MRP MATERIALS						
Newspaper	4,476	38.5%	1,725	4,286	46.2%	1,982
Cardboard	11,381	7.8%	890	10,896	15.6%	1,704
Clear Glass	2,883	16.0%	460	2,760	32.0%	883
Brown Glass	607	14.8%	90	581	29.6%	172
Green Glass	1,821	15.9%	290	1,743	31.8%	554
Steel Cans	2,428	6.8%	165	2,324	17.0%	395
Bimetal Cans	531	7.5%	40	508	18.8%	95
Aluminum Cans	683	6.6%	45	654	16.5%	108
Office Paper	3,869	0.3%	10	3,705	12.9%	479
HDPE Plastic	531	33.9%	180	508	37.3%	190
PET Plastic	76	33.0%	25	73	36.3%	26
Subtotal	29,286		3,920	28,039		6,589
LEAF/YARD WASTE COMPOSTING						
Leaf/Yard Waste	11,305	39.8%	4,500	10,823	51.7%	5,601
INDOOR ORGANIC COMPOSTING						
Contaminated Paper	6,373	0.0%	0	6,102	0.0%	0
Food	6,221	0.0%	0	5,956	0.0%	0
Other Organics	3,262	0.0%	0	3,123	0.0%	0
Subtotal	15,857		0	15,181		0
DIRECT TOWN MARKETING						
White Goods	1,366	64.1%	875	1,307	70.5%	922
Tires	152	92.3%	140	145	92.7%	135
Subtotal	1,517		1,015	1,453		1,056
HER WASTE RECYCLING						
Textiles	1,745	0.0%	0	1,671	5.0%	84
Wood Waste	2,883	0.0%	0	2,760	10.0%	276
Soil	1,214	0.0%	0	1,162	5.0%	58
Other Paper	5,766	0.0%	0	5,521	15.0%	828
Other Plastics	4,097	0.0%	0	3,922	10.0%	392
Other Glass	1,214	0.0%	0	1,162	10.0%	116
Other Metals	759	1.3%	10	726	20.0%	145
Other Inorganics	228	50.5%	115	218	55.6%	121
Subtotal	17,905		125	17,143		2,021
WASTE FOR PRIVATE PROCESSING						
C&D Waste	20,000	75.0%	15,000	19,148	75.0%	14,361
Septage Waste	200	0.0%	0	202	0.0%	0
Subtotal	20,200		15,000	19,350		14,361
SUBTOTAL	96,070	25.6%	24,560	91,989	32.2%	29,628
MIXED WASTE COMPOSTING						
Mixed Waste Available (2)	66,310			57,372		
Quantity Composted (3)			0			0
Percent Recovery (4)		0.0%			0.0%	
Quantity of Residue (5)			0			0
WASTE STREAM SUMMARY						
Total Waste Landfilled (6)			66,310			57,372
Total Recycling Rate		25.6%			32.2%	
Waste Reduction Rate		NA			5.0%	
Total Reduction/Recycling Rate		25.6%			37.2%	

NOTES:(1) Waste Generated is based on remaining waste after waste reduction initiatives (Table 3R-6) and Percent Recovery is based on estimates of recovery for each material.

(2) Quantity of mixed waste remaining (excluding C&D and septage waste) after recovery of materials indicated for each year.

(3) Quantity of mixed waste composted indoors at the proposed integrated waste management facility during periods when the facility has excess capacity.

(4) Percent of total mixed waste generated that is composted.

(5) Assumes 75 percent of mixed waste that is composted will be residue.

(6) Includes residue and the amount of remaining mixed that is not composted.

TABLE 6R-2
TOWN OF SOUTHAMPTON
ESTIMATED MATERIAL RECOVERY PROJECTIONS (1)

MATERIALS	1993 WASTE GENERATED (TONS)	1993 PERCENT RECOVERY	1993 MATERIALS RECOVERED (TONS)	1994 WASTE GENERATED (TONS)	1994 PERCENT RECOVERY	1994 MATERIALS RECOVERED (TONS)
MRF MATERIALS						
Newspaper	4,274	60.1%	2,569	4,262	72.1%	3,074
Cardboard	10,865	31.3%	3,399	10,834	46.9%	5,084
Clear Glass	2,753	48.0%	1,321	2,745	52.8%	1,449
Brown Glass	579	44.4%	257	578	48.8%	282
Green Glass	1,738	47.7%	829	1,734	52.5%	910
Steel Cans	2,318	34.0%	788	2,311	37.4%	864
Bimetal Cans	507	37.5%	190	506	41.3%	209
Aluminum Cans	652	33.0%	215	650	36.3%	236
Office Paper	3,694	32.3%	1,193	3,684	48.5%	1,785
HDPE Plastic	507	41.0%	208	506	43.1%	218
PET Plastic	72	39.9%	29	72	41.9%	30
Subtotal	27,961		11,000	27,881		14,141
LEAF/YARD WASTE COMPOSTING						
Leaf/Yard Waste	10,793	67.3%	7,261	10,762	74.0%	7,964
INDOOR ORGANIC COMPOSTING						
Contaminated Paper	6,083	0.0%	0	6,067	0.0%	0
Food	5,940	0.0%	0	5,923	0.0%	0
Other Organics	3,115	0.0%	0	3,106	0.0%	0
Subtotal	15,139		0	15,096		0
DIRECT TOWN MARKETING						
White Goods	1,304	77.5%	1,011	1,300	81.4%	1,058
Tires	145	93.2%	135	144	93.7%	135
Subtotal	1,449		1,146	1,445		1,194
.HER WASTE RECYCLING						
Textiles	1,666	15.0%	250	1,661	30.0%	498
Wood Waste	2,753	20.0%	551	2,745	30.0%	823
Soil	1,159	12.5%	145	1,156	25.0%	289
Other Paper	5,505	36.0%	1,982	5,489	54.0%	2,964
Other Plastics	3,912	25.0%	978	3,900	40.0%	1,560
Other Glass	1,159	25.0%	290	1,156	37.5%	433
Other Metals	724	44.6%	323	722	66.9%	483
Other Inorganics	217	61.1%	133	217	67.2%	146
Subtotal	17,095		4,651	17,046		7,198
WASTE FOR PRIVATE PROCESSING						
C&D Waste	19,095	75.0%	14,321	19,040	75.0%	14,280
Septage Waste	203	0.0%	0	205	0.0%	0
Subtotal	19,298		14,321	19,245		14,280
SUBTOTAL	91,735	41.8%	38,378	91,475	48.9%	44,777
MIXED WASTE COMPOSTING						
Mixed Waste Available (2)	48,380			41,733		
Quantity Composted (3)			0			0
Percent Recovery (4)		0.0%			0.0%	
Quantity of Residue (5)			0			0
WASTE STREAM SUMMARY						
Total Waste Landfilled (6)			48,380			41,733
Total Recycling Rate		41.8%			48.9%	
Waste Reduction Rate		6.0%			7.0%	
Total Reduction/Recycling Rate		47.8%			55.9%	

TABLE 6R-2
TOWN OF SOUTHAMPTON
ESTIMATED MATERIAL RECOVERY PROJECTIONS (1)

MATERIALS	1995 WASTE GENERATED (TONS)	1995 PERCENT RECOVERY	1995 MATERIALS RECOVERED (TONS)	1996 WASTE GENERATED (TONS)	1996 PERCENT RECOVERY	1996 MATERIALS RECOVERED (TONS)
MRF MATERIALS						
Newspaper	4,247	75.7%	3,217	4,241	76.5%	3,244
Cardboard	10,798	51.6%	5,574	10,782	54.2%	5,843
Clear Glass	2,736	55.4%	1,517	2,731	58.2%	1,590
Brown Glass	576	51.3%	295	575	53.8%	310
Green Glass	1,728	55.1%	952	1,725	57.8%	998
Steel Cans	2,304	41.1%	948	2,300	43.2%	994
Bimetal Cans	504	45.4%	229	503	47.6%	240
Aluminum Cans	648	39.9%	259	647	41.9%	271
Office Paper	3,671	58.1%	2,135	3,666	61.1%	2,238
HDPE Plastic	504	45.2%	228	503	45.7%	230
PET Plastic	72	44.0%	32	72	44.5%	32
Subtotal	27,788		15,384	27,746		15,990
LEAF/YARD WASTE COMPOSTING						
Leaf/Yard Waste	10,726	77.7%	8,334	10,710	78.5%	8,405
INDOOR ORGANIC COMPOSTING						
Contaminated Paper	6,047	25.0%	1,512	6,038	37.5%	2,264
Food	5,903	20.0%	1,181	5,894	32.0%	1,886
Other Organics	3,096	30.0%	929	3,091	45.0%	1,391
Subtotal	15,046		3,621	15,023		5,541
DIRECT TOWN MARKETING						
White Goods	1,296	82.2%	1,065	1,294	83.0%	1,074
Tires	144	93.7%	135	144	93.8%	135
Subtotal	1,440		1,200	1,438		1,209
HER WASTE RECYCLING						
Textiles	1,656	45.0%	745	1,653	49.5%	818
Wood Waste	2,736	48.0%	1,313	2,731	52.8%	1,442
Soil	1,152	40.0%	461	1,150	44.0%	506
Other Paper	5,471	64.8%	3,545	5,463	71.3%	3,894
Other Plastics	3,887	44.8%	1,742	3,882	47.0%	1,826
Other Glass	1,152	41.3%	475	1,150	43.3%	498
Other Metals	720	70.2%	506	719	70.9%	510
Other Inorganics	216	70.6%	152	216	71.3%	154
Subtotal	16,989		8,939	16,964		9,648
WASTE FOR PRIVATE PROCESSING						
C&D Waste	18,977	75.0%	14,233	18,948	75.0%	14,211
Septage Waste	206	0.0%	0	208	0.0%	0
Subtotal	19,183		14,233	19,156		14,211
SUBTOTAL	91,172	56.7%	51,712	91,036	60.4%	55,005
MIXED WASTE COMPOSTING						
Mixed Waste Available (2)	34,510			31,086		
Quantity Composted (3)			10,979			9,059
Percent Recovery (4)		12.0%			10.0%	
Quantity of Residue (5)			8,234			6,794
WASTE STREAM SUMMARY						
Total Waste Landfilled (6)			31,765			28,821
Total Recycling Rate		68.8%			70.4%	
Waste Reduction Rate		8.0%			9.0%	
Total Reduction/Recycling Rate		76.8%			79.4%	

TABLE 6R-2
TOWN OF SOUTHAMPTON
ESTIMATED MATERIAL RECOVERY PROJECTIONS (1)

MATERIALS	1997 WASTE GENERATED (TONS)	1997 PERCENT RECOVERY	1997 MATERIALS RECOVERED (TONS)	1998 WASTE GENERATED (TONS)	1998 PERCENT RECOVERY	1998 MATERIALS RECOVERED (TONS)
MRF MATERIALS						
Newspaper	4,234	77.3%	3,272	4,274	78.0%	3,336
Cardboard	10,765	56.9%	6,126	10,867	57.5%	6,246
Clear Glass	2,727	61.1%	1,667	2,753	64.2%	1,767
Brown Glass	574	56.5%	325	580	59.4%	344
Green Glass	1,722	60.7%	1,046	1,739	63.8%	1,109
Steel Cans	2,296	45.4%	1,042	2,318	45.8%	1,062
Bimetal Cans	502	48.1%	242	507	48.6%	246
Aluminum Cans	646	44.0%	284	652	44.5%	290
Office Paper	3,660	64.1%	2,346	3,695	64.8%	2,392
HDPE Plastic	502	46.1%	232	507	46.6%	236
PET Plastic	72	44.9%	32	72	45.4%	33
Subtotal	27,701		16,613	27,964		17,061
LEAF/YARD WASTE COMPOSTING						
Leaf/Yard Waste	10,693	79.3%	8,475	10,794	80.1%	8,641
INDOOR ORGANIC COMPOSTING						
Contaminated Paper	6,028	45.0%	2,713	6,085	49.5%	3,012
Food	5,885	48.0%	2,825	5,941	52.8%	3,137
Other Organics	3,086	63.0%	1,944	3,115	69.3%	2,159
Subtotal	14,999		7,481	15,141		8,308
DIRECT TOWN MARKETING						
White Goods	1,292	83.9%	1,083	1,304	84.7%	1,105
Tires	144	93.9%	135	145	94.0%	136
Subtotal	1,435		1,218	1,449		1,241
HER WASTE RECYCLING						
Textiles	1,651	52.0%	858	1,666	54.6%	909
Wood Waste	2,727	55.4%	1,512	2,753	55.7%	1,534
Soil	1,148	46.2%	530	1,159	46.7%	541
Other Paper	5,454	74.8%	4,082	5,506	75.6%	4,162
Other Plastics	3,875	47.5%	1,841	3,912	48.0%	1,877
Other Glass	1,148	43.7%	502	1,159	44.2%	512
Other Metals	718	71.3%	512	724	71.7%	519
Other Inorganics	215	72.0%	155	217	72.4%	157
Subtotal	16,936		9,992	17,097		10,212
WASTE FOR PRIVATE PROCESSING						
C&D Waste	18,917	75.0%	14,188	19,097	75.0%	14,323
Septage Waste	210	0.0%	0	212	0.0%	0
Subtotal	19,128		14,188	19,310		14,323
SUBTOTAL	90,891	63.8%	57,968	91,755	65.2%	59,786
MIXED WASTE COMPOSTING						
Mixed Waste Available (2)	27,983			26,983		
Quantity Composted (3)			7,119			6,292
Percent Recovery (4)		7.8%			6.9%	
Quantity of Residue (5)			5,339			4,719
WASTE STREAM SUMMARY						
Total Waste Landfilled (6)			26,204			25,410
Total Recycling Rate		71.6%			72.0%	
Waste Reduction Rate		10.0%			10.0%	
Total Reduction/Recycling Rate		81.6%			82.0%	

TABLE 6R-2
TOWN OF SOUTHAMPTON
ESTIMATED MATERIAL RECOVERY PROJECTIONS (1)

MATERIALS	1999 WASTE GENERATED (TONS)	1999 PERCENT RECOVERY	1999 MATERIALS RECOVERED (TONS)	2000 WASTE GENERATED (TONS)	2000 PERCENT RECOVERY	2000 MATERIALS RECOVERED (TONS)
MRF MATERIALS						
Newspaper	4,315	78.8%	3,401	4,356	79.6%	3,468
Cardboard	10,970	58.0%	6,368	11,075	58.6%	6,493
Clear Glass	2,779	64.8%	1,801	2,806	65.5%	1,837
Brown Glass	585	62.3%	365	591	63.0%	372
Green Glass	1,755	64.4%	1,131	1,772	65.1%	1,153
Steel Cans	2,340	46.3%	1,083	2,363	46.7%	1,104
Bimetal Cans	512	49.1%	251	517	49.6%	256
Aluminum Cans	658	44.9%	296	664	45.4%	301
Office Paper	3,730	65.4%	2,439	3,765	66.1%	2,487
HDPE Plastic	512	47.1%	241	517	47.3%	244
PET Plastic	73	45.8%	34	74	46.0%	34
Subtotal	28,230		17,409	28,499		17,750
LEAF/YARD WASTE COMPOSTING						
Leaf/Yard Waste	10,897	80.9%	8,811	11,001	81.7%	8,984
INDOOR ORGANIC COMPOSTING						
Contaminated Paper	6,143	52.0%	3,193	6,202	54.6%	3,385
Food	5,997	55.4%	3,325	6,054	58.2%	3,524
Other Organics	3,145	72.8%	2,288	3,175	76.4%	2,426
Subtotal	15,285		8,806	15,431		9,334
DIRECT TOWN MARKETING						
White Goods	1,316	85.6%	1,126	1,329	86.4%	1,148
Tires	146	94.1%	138	148	94.2%	139
Subtotal	1,463		1,264	1,477		1,287
THER WASTE RECYCLING						
Textiles	1,682	55.1%	927	1,698	55.7%	945
Wood Waste	2,779	56.0%	1,556	2,806	56.3%	1,579
Soil	1,170	47.1%	551	1,181	47.4%	560
Other Paper	5,558	76.3%	4,244	5,611	77.1%	4,327
Other Plastics	3,949	48.2%	1,905	3,987	48.5%	1,932
Other Glass	1,170	44.4%	520	1,181	44.6%	527
Other Metals	731	72.0%	527	738	72.4%	534
Other Inorganics	219	72.8%	160	221	73.1%	162
Subtotal	17,260		10,389	17,424		10,566
WASTE FOR PRIVATE PROCESSING						
C&D Waste	19,279	75.0%	14,459	19,463	75.0%	14,597
Septage Waste	214	0.0%	0	216	0.0%	0
Subtotal	19,493		14,459	19,679		14,597
SUBTOTAL	92,628	66.0%	61,139	93,510	66.9%	62,519
MIXED WASTE COMPOSTING						
Mixed Waste Available (2)	26,456			25,910		
Quantity Composted (3)			5,794			5,266
Percent Recovery (4)		6.3%			5.6%	
Quantity of Residue (5)			4,345			3,949
WASTE STREAM SUMMARY						
Total Waste Landfilled (6)			25,007			24,593
Total Recycling Rate		72.3%			72.5%	
Waste Reduction Rate		10.0%			10.0%	
Total Reduction/Recycling Rate		82.3%			82.5%	

TABLE 6R-2
TOWN OF SOUTHAMPTON
ESTIMATED MATERIAL RECOVERY PROJECTIONS (1)

MATERIALS	2001 WASTE GENERATED (TONS)	2001 PERCENT RECOVERY	2001 MATERIALS RECOVERED (TONS)	2002 WASTE GENERATED (TONS)	2002 PERCENT RECOVERY	2002 MATERIALS RECOVERED (TONS)
MRF MATERIALS						
Newspaper	4,409	80.4%	3,545	4,462	81.2%	3,624
Cardboard	11,209	59.2%	6,637	11,344	59.8%	6,785
Clear Glass	2,840	66.1%	1,878	2,874	66.8%	1,919
Brown Glass	598	63.6%	380	605	64.2%	389
Green Glass	1,793	65.7%	1,178	1,815	66.4%	1,205
Steel Cans	2,391	47.2%	1,129	2,420	47.7%	1,154
Bimetal Cans	523	50.1%	262	529	50.6%	268
Aluminum Cans	673	45.8%	308	681	46.3%	315
Office Paper	3,811	66.7%	2,542	3,857	67.4%	2,599
HDPE Plastic	523	47.5%	249	529	47.8%	253
PET Plastic	75	46.3%	35	76	46.5%	35
Subtotal	28,844		18,143	29,193		18,544
LEAF/YARD WASTE COMPOSTING						
Leaf/Yard Waste	11,134	82.5%	9,184	11,269	83.3%	9,387
INDOOR ORGANIC COMPOSTING						
Contaminated Paper	6,277	55.1%	3,460	6,353	55.7%	3,537
Food	6,128	58.8%	3,603	6,202	59.4%	3,683
Other Organics	3,213	80.2%	2,578	3,252	84.2%	2,739
Subtotal	15,618		9,640	15,806		9,959
DIRECT TOWN MARKETING						
White Goods	1,345	87.3%	1,174	1,361	88.1%	1,200
Tires	149	94.3%	141	151	94.4%	143
Subtotal	1,495		1,315	1,513		1,343
OTHER WASTE RECYCLING						
Textiles	1,719	56.2%	966	1,739	56.8%	988
Wood Waste	2,840	56.6%	1,606	2,874	56.8%	1,634
Soil	1,196	47.6%	569	1,210	47.8%	579
Other Paper	5,679	77.9%	4,423	5,748	78.7%	4,521
Other Plastics	4,035	48.7%	1,966	4,084	49.0%	1,999
Other Glass	1,196	44.8%	536	1,210	45.1%	545
Other Metals	747	72.7%	544	756	73.1%	553
Other Inorganics	224	73.5%	165	227	73.8%	168
Subtotal	17,635		10,775	17,848		10,987
WASTE FOR PRIVATE PROCESSING						
C&D Waste	19,699	75.0%	14,774	19,936	75.0%	14,952
Septage Waste	219	0.0%	0	222	0.0%	0
Subtotal	19,918		14,774	20,158		14,952
SUBTOTAL	94,644	67.4%	63,830	95,787	68.0%	65,172
MIXED WASTE COMPOSTING						
Mixed Waste Available (2)	25,870			25,409		
Quantity Composted (3)			4,960			4,641
Percent Recovery (4)		5.2%			4.8%	
Quantity of Residue (5)			3,720			3,481
WASTE STREAM SUMMARY						
Total Waste Landfilled (6)			24,430			24,249
Total Recycling Rate		72.7%			72.9%	
Waste Reduction Rate		10.0%			10.0%	
Total Reduction/Recycling Rate		82.7%			82.9%	

TABLE 6R-2

TOWN OF SOUTHAMPTON

ESTIMATED MATERIAL RECOVERY PROJECTIONS (1)

MATERIALS	2003 WASTE GENERATED (TONS)	2003 PERCENT RECOVERY	2003 MATERIALS RECOVERED (TONS)	2004 WASTE GENERATED (TONS)	2004 PERCENT RECOVERY	2004 MATERIALS RECOVERED (TONS)
MRF MATERIALS						
Newspaper	4,516	82.0%	3,704	4,571	82.8%	3,786
Cardboard	11,482	60.4%	6,936	11,620	61.0%	7,090
Clear Glass	2,909	67.5%	1,962	2,944	67.8%	1,996
Brown Glass	612	64.9%	397	620	65.5%	406
Green Glass	1,837	67.0%	1,231	1,859	67.7%	1,259
Steel Cans	2,449	48.1%	1,179	2,479	48.6%	1,206
Bimetal Cans	536	51.1%	274	542	51.6%	280
Aluminum Cans	689	46.7%	322	697	47.2%	329
Office Paper	3,904	68.1%	2,657	3,951	68.7%	2,716
HDPE Plastic	536	48.0%	257	542	48.2%	262
PET Plastic	77	46.7%	36	77	47.0%	36
Subtotal	29,547		18,955	29,903		19,365
LEAF/YARD WASTE COMPOSTING						
Leaf/Yard Waste	11,405	84.1%	9,596	11,543	85.0%	9,809
INDOOR ORGANIC COMPOSTING						
Contaminated Paper	6,430	55.9%	3,597	6,507	56.2%	3,659
Food	6,277	59.7%	3,746	6,352	60.0%	3,810
Other Organics	3,291	85.1%	2,800	3,331	85.9%	2,862
Subtotal	15,998		10,144	16,191		10,332
DIRECT TOWN MARKETING						
White Goods	1,378	89.0%	1,227	1,394	89.9%	1,254
Tires	153	94.5%	145	155	94.6%	147
Subtotal	1,531		1,371	1,549		1,400
THER WASTE RECYCLING						
Textiles	1,761	57.4%	1,010	1,782	57.9%	1,032
Wood Waste	2,909	57.1%	1,662	2,944	57.4%	1,690
Soil	1,225	48.1%	589	1,240	48.3%	599
Other Paper	5,817	79.4%	4,622	5,888	80.2%	4,724
Other Plastics	4,133	49.2%	2,034	4,183	49.4%	2,068
Other Glass	1,225	45.3%	555	1,240	45.5%	564
Other Metals	765	73.5%	562	775	73.8%	572
Other Inorganics	230	74.2%	170	232	74.6%	173
Subtotal	18,065		11,203	18,283		11,424
WASTE FOR PRIVATE PROCESSING						
C&D Waste	20,178	75.0%	15,134	20,422	75.0%	15,316
Septage Waste	224	0.0%	0	227	0.0%	0
Subtotal	20,402		15,134	20,649		15,316
SUBTOTAL	96,948	68.5%	66,403	98,118	68.9%	67,646
MIXED WASTE COMPOSTING						
Mixed Waste Available (2)	25,276			25,140		
Quantity Composted (3)			4,456			4,268
Percent Recovery (4)		4.6%			4.4%	
Quantity of Residue (5)			3,342			3,201
WASTE STREAM SUMMARY						
Total Waste Landfilled (6)			24,162			24,073
Total Recycling Rate		73.1%			73.3%	
Waste Reduction Rate		10.0%			10.0%	
Total Reduction/Recycling Rate		83.1%			83.3%	

TABLE 6R-2
TOWN OF SOUTHAMPTON
ESTIMATED MATERIAL RECOVERY PROJECTIONS (1)

MATERIALS	2005 WASTE GENERATED (TONS)	2005 PERCENT RECOVERY	2005 MATERIALS RECOVERED (TONS)	2006 WASTE GENERATED (TONS)	2006 PERCENT RECOVERY	2006 MATERIALS RECOVERED (TONS)
MRF MATERIALS						
Newspaper	4,624	83.7%	3,869	4,675	84.5%	3,951
Cardboard	11,757	61.6%	7,245	11,886	62.2%	7,397
Clear Glass	2,978	68.1%	2,029	3,011	68.5%	2,062
Brown Glass	627	66.2%	415	634	66.8%	424
Green Glass	1,881	68.4%	1,286	1,902	69.1%	1,313
Steel Cans	2,508	49.1%	1,232	2,536	49.6%	1,258
Bimetal Cans	549	52.1%	286	555	52.6%	292
Aluminum Cans	705	47.7%	336	713	48.1%	343
Office Paper	3,997	69.4%	2,775	4,041	70.1%	2,833
HDPE Plastic	549	48.5%	266	555	48.7%	270
PET Plastic	78	47.2%	37	79	47.4%	38
Subtotal	30,254		19,776	30,586		20,181
LEAF/YARD WASTE COMPOSTING						
Leaf/Yard Waste	11,678	85.8%	10,024	11,807	86.7%	10,235
INDOOR ORGANIC COMPOSTING						
Contaminated Paper	6,584	56.5%	3,721	6,656	56.8%	3,780
Food	6,427	60.3%	3,874	6,498	60.6%	3,936
Other Organics	3,370	86.8%	2,925	3,407	87.7%	2,987
Subtotal	16,381		10,520	16,561		10,703
DIRECT TOWN MARKETING						
White Goods	1,411	90.8%	1,281	1,426	91.7%	1,308
Tires	157	94.7%	148	158	94.8%	150
Subtotal	1,568		1,430	1,585		1,459
OTHER WASTE RECYCLING						
Textiles	1,803	58.2%	1,050	1,822	58.5%	1,066
Wood Waste	2,978	57.7%	1,718	3,011	58.0%	1,746
Soil	1,254	48.6%	609	1,268	48.8%	619
Other Paper	5,957	80.6%	4,804	6,022	81.0%	4,881
Other Plastics	4,232	49.7%	2,103	4,279	49.9%	2,137
Other Glass	1,254	45.8%	574	1,268	46.0%	583
Other Metals	784	74.2%	582	792	74.6%	591
Other Inorganics	235	75.0%	176	238	75.3%	179
Subtotal	18,497		11,616	18,700		11,802
WASTE FOR PRIVATE PROCESSING						
C&D Waste	20,661	75.0%	15,496	20,888	75.0%	15,666
Septage Waste	230	0.0%	0	232	0.0%	0
Subtotal	20,891		15,496	21,120		15,666
SUBTOTAL	99,270	69.4%	68,861	100,359	69.8%	70,045
MIXED WASTE COMPOSTING						
Mixed Waste Available (2)	25,014			24,859		
Quantity Composted (3)			4,080			3,897
Percent Recovery (4)		4.1%			3.9%	
Quantity of Residue (5)			3,060			2,923
WASTE STREAM SUMMARY						
Total Waste Landfilled (6)			23,994			23,885
Total Recycling Rate		73.5%			73.7%	
Waste Reduction Rate		10.0%			10.0%	
Total Reduction/Recycling Rate		83.5%			83.7%	

TABLE 6R-2
TOWN OF SOUTHAMPTON
ESTIMATED MATERIAL RECOVERY PROJECTIONS (1)

MATERIALS	2007 WASTE GENERATED (TONS)	2007 PERCENT RECOVERY	2007 MATERIALS RECOVERED (TONS)	2008 WASTE GENERATED (TONS)	2008 PERCENT RECOVERY	2008 MATERIALS RECOVERED (TONS)
MRF MATERIALS						
Newspaper	4,727	85.4%	4,034	4,779	86.2%	4,120
Cardboard	12,017	62.9%	7,554	12,149	63.5%	7,713
Clear Glass	3,044	68.8%	2,095	3,078	69.2%	2,128
Brown Glass	641	67.5%	433	648	68.2%	442
Green Glass	1,923	69.4%	1,335	1,944	69.8%	1,356
Steel Cans	2,564	50.1%	1,284	2,592	50.6%	1,312
Bimetal Cans	561	53.2%	298	567	53.7%	304
Aluminum Cans	721	48.6%	351	729	49.1%	358
Office Paper	4,086	70.8%	2,893	4,131	71.5%	2,954
HDPE Plastic	561	49.0%	275	567	49.2%	279
PET Plastic	80	47.7%	38	81	47.9%	39
Subtotal	30,924		20,589	31,264		21,005
LEAF/YARD WASTE COMPOSTING						
Leaf/Yard Waste	11,937	87.6%	10,451	12,068	88.4%	10,672
INDOOR ORGANIC COMPOSTING						
Contaminated Paper	6,729	57.1%	3,841	6,803	57.4%	3,903
Food	6,569	60.9%	3,999	6,642	61.2%	4,064
Other Organics	3,445	88.5%	3,050	3,483	89.4%	3,114
Subtotal	16,744		10,890	16,928		11,080
DIRECT TOWN MARKETING						
White Goods	1,442	92.6%	1,336	1,458	93.6%	1,364
Tires	160	94.9%	152	162	95.0%	154
Subtotal	1,602		1,488	1,620		1,518
OTHER WASTE RECYCLING						
Textiles	1,843	58.8%	1,084	1,863	59.1%	1,101
Wood Waste	3,044	58.3%	1,774	3,078	58.6%	1,803
Soil	1,282	49.0%	629	1,296	49.3%	639
Other Paper	6,089	81.5%	4,959	6,156	81.9%	5,039
Other Plastics	4,326	50.2%	2,171	4,374	50.4%	2,206
Other Glass	1,282	46.2%	592	1,296	46.4%	602
Other Metals	801	74.9%	600	810	75.3%	610
Other Inorganics	240	75.7%	182	243	76.1%	185
Subtotal	18,907		11,992	19,115		12,184
WASTE FOR PRIVATE PROCESSING						
C&D Waste	21,118	75.0%	15,839	21,351	75.0%	16,013
Septage Waste	235	0.0%	0	237	0.0%	0
Subtotal	21,353		15,839	21,588		16,013
SUBTOTAL	101,466	70.2%	71,249	102,582	70.6%	72,472
MIXED WASTE COMPOSTING						
Mixed Waste Available (2)	24,703			24,535		
Quantity Composted (3)			3,710			3,520
Percent Recovery (4)		3.7%			3.4%	
Quantity of Residue (5)			2,782			2,640
WASTE STREAM SUMMARY						
Total Waste Landfilled (6)			23,775			23,655
Total Recycling Rate		73.9%			74.1%	
Waste Reduction Rate		10.0%			10.0%	
Total Reduction/Recycling Rate		83.9%			84.1%	

TABLE 6R-2
TOWN OF SOUTHAMPTON
ESTIMATED MATERIAL RECOVERY PROJECTIONS (1)

MATERIALS	2009 WASTE GENERATED (TONS)	2009 PERCENT RECOVERY	2009 MATERIALS RECOVERED (TONS)	2010 WASTE GENERATED (TONS)	2010 PERCENT RECOVERY	2010 MATERIALS RECOVERED (TONS)
MRF MATERIALS						
Newspaper	4,831	87.1%	4,206	4,884	87.9%	4,295
Cardboard	12,282	64.1%	7,876	12,418	64.8%	8,042
Clear Glass	3,112	69.5%	2,163	3,146	69.8%	2,197
Brown Glass	655	68.9%	451	662	69.5%	461
Green Glass	1,965	70.1%	1,378	1,987	70.5%	1,400
Steel Cans	2,620	51.1%	1,339	2,649	51.6%	1,367
Bimetal Cans	573	54.2%	311	579	54.8%	317
Aluminum Cans	737	49.6%	366	745	50.1%	373
Office Paper	4,176	72.2%	3,017	4,222	73.0%	3,080
HDPE Plastic	573	49.5%	284	579	49.7%	288
PET Plastic	82	48.2%	39	83	48.4%	40
Subtotal	31,607		21,429	31,955		21,862
LEAF/YARD WASTE COMPOSTING						
Leaf/Yard Waste	12,200	89.3%	10,897	12,335	90.2%	11,127
INDOOR ORGANIC COMPOSTING						
Contaminated Paper	6,878	57.6%	3,965	6,954	57.9%	4,029
Food	6,714	61.5%	4,129	6,788	61.8%	4,195
Other Organics	3,521	90.3%	3,180	3,560	91.2%	3,247
Subtotal	17,113		11,274	17,302		11,471
DIRECT TOWN MARKETING						
White Goods	1,474	94.5%	1,393	1,490	95.5%	1,422
Tires	164	95.1%	156	166	95.2%	158
Subtotal	1,638		1,549	1,656		1,580
THIRD WASTE RECYCLING						
Textiles	1,883	59.4%	1,119	1,904	59.7%	1,137
Wood Waste	3,112	58.9%	1,831	3,146	59.2%	1,861
Soil	1,310	49.5%	649	1,325	49.8%	659
Other Paper	6,223	82.3%	5,120	6,292	82.7%	5,202
Other Plastics	4,422	50.7%	2,241	4,470	50.9%	2,277
Other Glass	1,310	46.7%	611	1,325	46.9%	621
Other Metals	819	75.7%	620	828	76.1%	630
Other Inorganics	246	76.5%	188	248	76.9%	191
Subtotal	19,324		12,379	19,537		12,578
WASTE FOR PRIVATE PROCESSING						
C&D Waste	21,585	75.0%	16,189	21,823	75.0%	16,367
Septage Waste	240	0.0%	0	243	0.0%	0
Subtotal	21,825		16,189	22,065		16,367
SUBTOTAL	103,707	71.1%	73,716	104,850	71.5%	74,985
MIXED WASTE COMPOSTING						
Mixed Waste Available (2)	24,355			24,167		
Quantity Composted (3)			3,326			3,129
Percent Recovery (4)		3.2%			3.0%	
Quantity of Residue (5)			2,495			2,347
WASTE STREAM SUMMARY						
Total Waste Landfilled (6)			23,524			23,384
Total Recycling Rate		74.3%			74.5%	
Waste Reduction Rate		10.0%			10.0%	
Total Reduction/Recycling Rate		84.3%			84.5%	

available recycling markets is essential for the proper design and implementation of the Town's integrated solid waste management program. Only by producing material acceptable to local or regional markets can the Town maximize the potential value of its recycling program.

It is essential to remember, however, that although a number of markets currently exist for the designated recyclable material generated within the Town, market price and volume fluctuations can affect recycling economics. Markets for recyclable material have traditionally been unstable since these markets reflect international fluctuations in demand for raw materials, domestic and foreign economic conditions, economics of competing raw materials, and the availability of recycled materials. Thus, the Town will retain flexibility, continue market research to identify alternative markets for recyclable materials, and adjust its recycling program accordingly.

6.7.1R Market Survey

The goal of the markets survey was to gather accurate information on possible market specifications and to identify which specifications are common for each material. The survey provided information on market services that may be available, the ability of these markets to accept the projected quantities of recyclable materials generated within the Town, and the delivery and transportation options that may be available to the Town. With respect to each market contacted, information regarding contract preference, plans for expansion and opinions on future market trends was obtained.

Markets were initially identified through a variety of sources including market listings from the New York State Department of Economic Development (NYSDED), local information available through the Town, telephone directory listings and information from industry journals. Appendix R-K contains the list of potential materials markets which were surveyed.

The NYSDED provided a list of various markets existing on or around Long Island for a variety of materials including various grades of paper, OCC, glass, plastics, metals, batteries, textiles, C&D debris (including wood and bulky items), tires, white goods, used oil and compost. These "markets" include brokers, processors and end-users. The NYSDED provided additional information on the materials such as end use of some materials and what types of material these markets may prefer.

Experience has shown that buyers of recyclables, particularly brokers, frequently enter and exit the marketplace. As such, this market survey was not an attempt to develop an exhaustive list of all potential markets, but rather to identify key purchasers in the region who are likely to be purchasing recyclables in the near future. These purchasers fall into two basic categories, end-users (mills and manufacturers) and major brokers/processors who broker materials to overseas markets and domestic end-users. Brokers and processors typically purchase unprocessed material, whereas end-users typically purchase materials processed after collection. Purchasers in the Tri-state area were preferred. However, for some materials, particularly for tin cans, it was necessary to expand the study area to contact end-users. An attempt was made to contact at least ten markets (if ten were identified) for each material in order to obtain a broad spectrum of information on potential market requirements.

The Town is currently engaging in a highly successful and comprehensive materials marketing effort. The following 16 categories of materials are marketed on a spot-market basis by the Town: office paper, OCC, low grade newspaper, high grade newspaper, scrap metal, No. 1 steel, cast iron, commercial aluminum, mixed color glass, mixed plastics, mixed cans, mixed glass, waste oil, tires and textiles. None of these materials are currently processed prior to shipment to market.

6.7.2R Market Survey Results

Overall the market survey was successful and informative. Although a few potential buyers were unresponsive, most contacts were enthusiastic about the possibility of accepting materials from the Town. Many contacts were not prepared to provide detailed responses because they typically determine marketing arrangements on a case-by-case basis after consideration of specific factors affecting each arrangement. Therefore, many were unprepared to respond to general survey questions in detail. For example, when asked about material processing requirements and associated revenues, many contacts would not elaborate on specific processing requirements and prices stating that, due to the changing nature of these issues, a specific answer may not apply in the future. Others preferred to discuss specifics during actual contract negotiations. Since this survey was generally concluded with one phone call, the results are not meant to be used as a direct comparison of the contacted companies.

The following material markets were reviewed as part of the survey:

- Glass
- Tin Cans
- Aluminum
- Plastic
- Newspaper
- Old Corrugated Containers (OCC)
- Other Paper Grades
- Compost
- Batteries
- Wood
- Waste Oil
- Tires
- Textiles
- Construction & Demolition (C&D) debris and other bulky items

A summary of the potential market services that may be available for each of these materials is presented in Table 6R-3. Table 6R-3 also provides the various processing requirements necessary to meet the material quality specifications identified through the survey. Appendix R-K provides the complete results of the market survey. Descriptions that summarize the marketability of each recyclable material are provided below.

Glass - Ten potential markets were surveyed to discuss glass marketing. Most of these markets required the glass to be color separated into clear, green and amber categories. The highest prices quoted were for clear glass (up to $55 per ton) followed by green (up to $40 per ton) and amber (up to $40 per ton). Another requirement was that contaminants such as ceramics, tar, concrete, etc. be thoroughly removed.

Many of the markets contacted wanted the glass broken with no beneficiation, since they preferred to remove the neckrings and caps themselves in order to make the glass furnace-ready. However, one unbiased contact from the New Jersey Glass Recycling Association offices reported that there are manufacturers in the area who may pay significantly higher prices for glass that is furnace-ready (beneficiated). The highest prices quoted represent the markets that want the glass beneficiated. It was reported by some brokers that glass manufacturers were very particular about the quality of incoming glass they receive and may reject whole shipments if they find trace contamination.

Tin Cans - All together, seven prospective tin can markets were successfully contacted. Two of these were detinning companies, three were steel mills, and the remaining two were processors. Although one detinning market would accept the various ferrous cans flattened, both detinning companies specified the material to be baled with a density of 35 to 50 pounds per cubic foot (lbs/cf) and that no processing other than

TABLE 6R-3

SUMMARY OF MATERIAL QUALITY REQUIREMENTS

MATERIAL	MATERIAL QUALITY REQUIREMENTS	NUMBER OF MARKETS (1)	QUOTED REVENUE ($/TON)
ALUMINUM	1. CANS ONLY, FLATTENED, LOOSE , NO CONTAMINANTS	6	400 TO 700
	2. CANS ONLY, BALED , NO CONTAMINANTS	4	780 TO 1000
	3 ALUMINUM FOIL ONLY, BALED(MAYBE LOOSE)	1	200 TO 400
	4 ALUMINUM SIDING ALONE, BALED	1	810
	TOTAL CONTACTED	8	
BATTERIES	1. MIXED HOUSEHOLD BATTERIES	1	VARIABLE
	2. AUTO BATTERIES ONLY, LOOSE OR ON SKIDS, 3 HIGH WITH CARDBOARD IN BETWEEN EACH ONE, BOUND	6	0.0325 TO 0.064(PER Lb.)
	TOTAL CONTACTED	7	
GLASS BOTTLES	1. COLOR SORTED INTO CLEAR, GREEN AND AMBER, NO CERAMICS AND EITHER A OR B :		
	A. CAPS, NECKRINGS AND LABELS ACCEPTABLE.	7	10 TO 38
	B. NO CAPS OR NECKRINGS BUT LABELS ACCEPTABLE(FURNACE READY CULLET)	3	10 TO 55
	2. MIXED COLORS, MAY INCLUDE OTHER MATERIALS	2	-20 TO -26
	TOTAL CONTACTED	10	
NEWSPAPER	1. BALED(VARIOUS DENSITIES) , PS-84 GRADES 6,7 & 8	16	0 TO 25
	2. LOOSE , NO BROWN GRADES , SUNDAY INSERTS ACCEPTABLE.	5	-3 TO 6
	TOTAL CONTACTED	17	
O.C.C.	1. BALED , FLAT SHEET, CLEAN, PS-84 GRADE 11 , NO CONTAMINANTS ,	13	26 TO 43
	2. LOOSE , CLEAN, PS-84 GRADE 11	5	0 TO 20
	TOTAL CONTACTED	17	
OTHER PAPER GRADES	1. BALED OR LOOSE AND EITHER :		
	A. MIXED, PS-84 GRADE 1	2	-13
	B. "BLEND PACK", NO GROUNDWOOD, NO WINDOW ENVELOPES, NO KRAFT PAPER.	1	30
	C. OFFICE PAPER WITH GLOSSY MAGAZINES AND JUNK MAIL, BUT WITH NO BROWN GRADES.	1	0
	D. VARIOUS HIGH QUALITY OFFICE GRADES	11	1 TO 230
	E. MIXED POST CONSUMER	1	-50
	F. CHIP BOARD ONLY	1	-40
	TOTAL CONTACTED	15	
PLASTICS	1. MIXED AND EITHER A OR B :		
	A. ALL RESIN TYPES, BALED.	2	VARIABLE
	B. MILK AND SODA BOTTLES ONLY , 12.5 lb/cf, 750 lb. BALE,3'x 4'x 6'.	2	50 TO 120
	2. RESIN SORTED AND, IF REQUIRED, BALED :		
	A. CLEAR PET	4	120 TO 200
	B. GREEN PET	4	0 TO 140
	C. MIXED PET	10	140 TO 220
	D. MILK CONTAINERS(HDPE) ONLY	4	0 TO 220
	E. MIXED COLOR HDPE	10	0 TO 220
	F. PVC	7	0 TO 300
	G. LDPE	5	0 TO 220
	H. POLY-STYRENE	4	600(APPROX.)
	3. GRANULATED , RESIN SORTED CONTAINERS	1	200
	TOTAL CONTACTED	15	

TABLE 6R-3

(Continued)

SUMMARY OF MATERIAL QUALITY REQUIREMENTS

MATERIAL	MATERIAL QUALITY REQUIREMENTS	NUMBER OF MARKETS (1)	QUOTED REVENUE ($/TON)
TIN CANS	1. BALED AND EITHER A OR B :		
	A. 35 – 50 lb/bl , Bi- METAL AND AEROSOL CANS ACCEPTABLE , PAPER LABELS ACCEPTABLE , NO PRE-CLEANING NEEDED.	2	70
	B. 75 lb/bl , 2'x 2'x 4' BALE.	2	62 TO 67
	2. FLATTENED, NO PRE-CLEANING NEEDED, Bi-METAL AND AEROSOL CANS ACCEPTABLE.	1	55
	3. DENSIFIED, RESIDUES AND LABELS ACCEPTABLE.	1	65
	4. SHREDDED, SEPARATED, CLEAN.	1	55
	5. HUGGETIZED, SEPARATED, CLEAN	1	55
	6. BRIQUETTED, SEPARATED, CLEAN	1	45
	7. LOOSE, SEPARATED	15AX20	
	TOTAL CONTACTED	7	
TIRES	1. WHOLE TIRES,W/RIMS, TUBES, TRUCK TIRE FLAPS, OTHER RUBBER TIRES	1	80
	2. PASSENGER TIRES ONLY, NO RIMS, GOOD INNER CASINGS, NO PUNCTURES	1	N/A
	3. PASSENGER AND TRUCK TIRES, W/or W/OUT RIMS.	2	95
	4. PASSENGER TIRES W/OUT RIMS.	1	75
	TOTAL CONTACTED	5	
TEXTILES	1. BALED, LOOSE OR BUNDLED	2	40 TO 100
	2. ALL NATURAL FIBER CUT-OFFS, NO POST CONSUMER	1	800
	3. BALED SECOND HAND CLOTHING, PAIRED BOOKS, NO STOCKINGS, HANDBAGS, SHOES, BELTS, PLASTIC JACKETS.	2	140 TO 170
	TOTAL CONTACTED	5	
C & D DEBRI (2)	1. MIXED C & D WASTE	3	VARIABLE
	2. WHITE GOODS, FURNITURE, RUGS, APPLIANCES & OTHER ITEMS	1	VARIABLE
	TOTAL CONTACTED	3	
WASTE OIL	1. ALL TYPES OF WASTE OIL, NO ANTI-FREEZE	7	0 TO 0.30(PER GALN.)
	2. ANTI-FREEZE ONLY	2	0.72 TO 0.91(PER GALN.)
	TOTAL CONTACTED	7	
WOOD	1. BROKEN PALLETS, CLEAN WOOD, NO YARD WASTE	4	-7 TO -7.5(PER CY)
	2. LOOSE OR BALED YARD WASTE AND STUMPS	1	-8 (PER CY)
	TOTAL CONTACTED	5	

NOTES :

(1) THE NUMBER OF MARKETS DOES NOT ADD UP TO THE TOTAL CONTACTED BECAUSE SOME OF THE CONTACTED MARKETS ACCEPTED MATERIALS IN MORE THAN ONE FORM.

(2) INCLUDES CONSTRUCTION & DEMOLITION (C&D) AND OTHER WASTE ITEMS LIKE WHITE GOODS, FURNITURE, RUGS, AND OTHER APPLIANCES.

SOURCE : MALCOLM PIRNIE INC. MARKET SURVEYS.

removing contaminants would be required. This contrasts with the steel mills that wanted higher density bales (70 to 75 lbs/cf) or material that was shredded, densified or briquetted. Prices ranged from a low of $20 per ton up to $70 per ton. The highest prices offered were for baled cans.

The detinners were very enthusiastic to secure new sources of tin cans and to discuss market services, long-term contracts and prices. Their specifications require a minimal amount of processing of the material prior to marketing, yet prices are competitive with revenues of the steel mills. One detinning company reported that they have a broker in New York City who will accept the tin cans for them (this market also expressed an interest in taking newspaper, OCC, aluminum and plastic from the Town). Prices quoted for these other materials were competitive with other local markets.

In discussing the future of recycling tin cans, the general impression received from the markets contacted is that the detinning industry is likely to expand in the future to handle the growing amount of recycled tin cans being marketed while the steel industry will stabilize its demand for this type of scrap tin. Since the detinners have the ability to recover tin and make a scrap steel that can satisfy most steel mills' requirements, their product may be more marketable to the industry than an operation which can only produce tin-coated cans. Because of this advantage, many contacts believe that detinners may be the focal point of tin can recycling in the future.

Aluminum - Eight markets for aluminum were successfully contacted in the tri-state area. Six of the contacts accepted cans flattened and loose with no contaminants. It is not certain as to the percentage of contaminants that will be accepted in the aluminum since a minor amount of contamination is inherent in processing. These aluminum markets currently accept MRF aluminum. The two aluminum manufacturers contacted have also reported willingness to supply market services including the lease of equipment such as flattened can storage and transport containers, and to execute long term contracts. Four of the contacted markets would accept baled material. Some of the markets contacted reportedly accept other types of aluminum such as foil and siding. The prices for these forms are less than for cans but still represent a high return value.

Of the various materials to be marketed by the Town, aluminum will probably generate the highest unit revenue. Prices ranged from an estimated $760 to $1,000 per ton for picked-up baled aluminum cans, $400 to $700 for loose cans, up to $810 for aluminum

siding and from $200 to $400 for aluminum foil. The markets contacted who wanted the aluminum baled quoted the highest prices.

Plastic - Fifteen plastic markets were successfully contacted on and around Long Island. When contacted, these buyers were asked to provide information on all resin types they process. Higher unit revenues were reported when the plastics were separated into various resins (i.e., PET and HDPE), although two markets expressed an interest in mixed plastics. Soda bottles comprise most of the PET found in the waste stream and milk bottles comprise most of the HDPE. The recent survey conducted produced several markets that were interested in accepting PVC, LDPE and poly-styrene (PS). This new market acceptance is in contrast to market information from previous years, which indicated that few if any markets had historically accepted this resin.

The markets that were interested in resins other than PET and HDPE reported that they only purchase post-industrial plastic scrap. A few indicated possible interest in post-consumer PVC, PS and LDPE, but were concerned that, since even trace amounts of contamination can render the material unrecyclable, separation of these resins through curbside collection may not be feasible at this time.

Union Carbide has expressed interest in taking polyethylene-based resins (PET, HDPE, LDPE, LLDPE) film along with PET and HDPE containers. The materials would have to be segregated, with all three types being sold to Union Carbide.

With the exception of one market that required the plastics to be granulated, most markets preferred the plastics to be baled, although some would accept them loose. Since only one market for granulated product was found in the area and the prices quoted here were similar to other quotes, this market type does not appear to be an attractive option at this time.

One relatively new market type was presented by Polymerex in New Jersey. This company will accept separated and mixed plastics and make plastic lumber for products such as fences. The mixed plastics can contain milk and soda bottles as well as other plastics such as butter tubs, detergent bottles, bags, and food containers. This option of mixed plastics requires a minimum amount of processing and may be more viable in the future if other markets similar to Polymerex expand in this area. Polymerex recommended that the PET soda bottles be separated out of the plastic waste stream to maximize revenue for this resin or for their redemption valve, and the remainder, including HDPE milk bottles, be

commingled. If the HDPE fraction were removed, the remaining mixed plastics would not be acceptable to them. This market may represent an attractive option if a wide range of plastics come in from the curbside collection programs in the Town. Polymerex is planning another facility to be constructed in upstate New York. It is noted, however, that most brokers expressed strong reservations about the mixed plastics market, citing the standing necessity to segregate resins and the limited markets for plastic lumber.

One market contacted in New York City and not included in the Material Market Survey Summary Tables in Appendix R-K was Recycled Plastics Products (RPP). It is reported by RPP that due to New York City regulations they were prohibited from accepting plastics used as food containers. Other New York City markets did not express these concerns.

As with the other markets, most of the contacts surveyed would not discuss market services in any detail. Contacts reported a willingness to provide such services but the extent of these vary widely from contact to contact.

Newspaper - Twenty-two potential paper markets were able to respond to the survey questions and seventeen expressed an interest in newspaper. Most newspaper markets require the paper to be baled and sorted with bale weights ranging from 1,200 lbs to 2,000 lbs, although some would accept either baled or loose newspaper. The degree to which sorting was required varied according to the industry specification standard "Paper Stock Standards and Practices - Circular PS-86" published by the Paper Stock Institute of America. The highest prices quoted ($25 per ton) were for Grade 8 news or "Special News De-Ink Quality". The lowest grade of news acceptable would have to conform to the specifications under Grade 6 "News". This lowest grade of newspaper would still require some sorting, since no more than 5 percent of it may consist of other papers. The one exception to this was Laidlaw Resources in Ontario, Canada, that reported accepting baled news with up to 35 percent magazines included. The revenues for this grade ranged from a low of costing $3 per ton to take the material to a high of $25 per ton paid with both prices including transportation.

Some markets stated that sometimes they may have to charge their suppliers to accept Grade 6 newspaper because it may cost them to dispose of it at certain times of the year. This negative revenue condition, most markets feel, is due to a market glut and most contacts believe that this condition may end in the near future. This lower grade of news

may be more acceptable in the future as more mills are entering the market and the competition is increasing.

Old Corrugated Containers (OCC) - Seventeen markets were interested in OCC. Most of them specified that the material be baled though some would accept it loose. Some of the contacted markets wanted the OCC in high density bales which are of export quality. This export option is important as international customers may have limited natural resources and are apparently reluctant to pay for higher priced raw materials. Though only specifically mentioned by one respondent, the OCC will probably have to meet the "Paper Stock Standards and Practices - Circular PS-86" Grade 11 (corrugated containers) specifications to maximize its marketability. Prices ranged from a low of $10 per ton to a high of $43 per ton delivered.

Other Paper Grades - Fifteen markets were interested in accepting paper other than ONP or OCC. The one mill, Marcal Paper in Elmwood, NJ, required the paper to consist primarily of office paper with glossy magazines and junk mail but no brown grades such as phone books or newspapers. Two brokers accepted baled office waste which consists of all types of paper and corresponds to the PS-86 Grade 1. One broker accepted a baled "Blend Pack" which consisted of office waste with no ground wood paper, plastic window envelopes or Kraft paper. One broker/processor, Westbury Paper Co., expressed an interest in accepting various grades of other paper. In addition to accepting high grades of office paper and OCC they also accepted mixed post-consumer paper for a charge of $50 per ton, and chipboard (paperboard) that was highly separated for a charge of $40 per ton. Many markets contacted were willing to pay higher prices for homogeneous materials such as computer paper, white ledger etc. The prices for these materials range from costing $10 or $20 per ton for low quality mixed office paper up to a high of generating $230 per ton for some of the abovementioned separated high grades.

A few brokers reported that they are now paying to dispose of their own mixed paper waste. However, a few brokers reportedly have heard that new mills that would accept mixed waste paper exclusively are being planned. An outlet for mixed waste paper including junk mail, chipboard, brown grades, etc., without sortation would be an important step since mixed paper represents a large portion of the municipal waste stream.

Textiles - Five markets were successfully contacted for textiles, four in the local area (Bronx and Brooklyn, NY) and one in Philadelphia, PA. Two of the local markets were not specific as to their exact material requirements. One accepted only wool from industrial suppliers. The remaining two markets were able to provide more specific details on the materials they accept. It appears that the most marketable textiles will consist of baled second hand clothing with little or no contamination with other discarded items. Prices for this material ranged up to a high of $170 per ton. Most of the contacts were willing to enter into a contract and to provide some type of market services. Other outlets for textiles which were not a part of this survey include goodwill or community service organizations such as the Salvation Army, local church groups or homeless shelters.

Oil - Seven markets were contacted in and around the Long Island area. All of the markets wanted the waste oil separated from other contaminants such as anti-freeze. Waste oil may consist of gear, hydraulic, transmission and motor oils but not non-automotive oils or thinners. Two of the markets would accept anti-freeze and pay up to $50 per 55-gallon drum for it. Waste oil prices ranged from no charge up to charging 20 cents per gallon. Many markets were willing to provide some type of services and contract.

Batteries - Six battery markets were contacted in the Tri-state area and one in Texas. One local market accepted mixed household batteries and the remaining six accepted auto batteries only. Revenue for the household batteries varies according to how much of the mix is recoverable. The auto batteries could either be bound on a skid or loose. Auto batteries revenue ranged from 3.25 cents to 8.5 cents per pound usually based on a trailer load basis. Many markets were willing to provide transportation and some type of contract.

Wood - Five markets were surveyed for wood. Four accepted what is referred to as "dimensional wood," originating from pallets, C&D waste, etc. Only one market accepted yard waste and stumps. Charges to accept this material were $6 per cubic yard for yard waste and stumps and $7 to $7.50 per cubic yard for dimensional wood. No specifications other than requiring the dimensional wood to be free of yard waste and other materials were reported for this material. Yard waste and stumps could be delivered loose or baled. Four of the markets were willing to provide either containers and/or transportation and all were willing to enter into a contract.

Tires - Five markets were successfully contacted for used tires. Two markets accepted car and truck tires with or without rims for a price of up to $95 per ton. One market wanted good condition passenger car tires which could be remolded into new tires. Prices for these were unavailable at the time of contact. This market does not represent a viable one for the Town as the market reported a rejection rate of up to 90 percent of the tires they inspect. Another market accepted whole tires (any type) with rims for a revenue of $80 per ton and the last market wanted only passenger car tires without rims for a revenue of $76 per ton. Most markets were willing to enter into a contract and two reported a willingness to provide market services.

Compost - An important aspect of any composting program is finding end-users (i.e., markets) for the product. Unlike markets for recyclables, the marketing network for compost is relatively new and less established. The potential exists for marketing of the compost product to local farmers and commercial establishments such as landscaping companies, sod farms, golf courses, nurseries, cemeteries, and garden centers. Alternately, local residents or government agencies, primarily the Department of Public Works, Transportation, and Parks and Recreation are often able to use locally-generated compost if it is given away free of charge. Some government bodies (such as Suffolk County, NY) are adapting policies or ordinances requiring the use of compost for government projects. Additionally, the compost product may be suitable as daily or top cover for sanitary landfills, in accordance with NYSDEC regulations for landfills. It is anticipated that the compost product produced by the Town's composting facility will be largely marketed to Town or County agencies and to local residents. Commercial compost markets will be solicited only if additional market outlets are required.

6.7.3R Market Development and Additional Sources of Information

In addition to the available markets identified in this Section, the Town will engage in efforts to encourage additional market development. Market development efforts will allow the Town to develop and pursue additional avenues of recycling, composting, and reuse which are not currently available.

For example, several communities outside of the Town are evaluating the potential for using glass or rubber as components in asphalt for road repairs and/or paving. The Town can encourage the development of these or other marketing options for recyclables

by sponsoring pilot programs, research and development projects, or by working with manufacturers and producers to encourage other potential future markets currently in developmental stages. Additionally, efforts to revise procurement policies favoring products made from recycled products will help to expand markets for them. The State's procurement law, GML §103, requires that only low bids be accepted. However, Chapter 70 of the Laws of 1988 mandates that New York State agencies are to purchase recycled paper even if the comparable recycled products costs up to ten percent more than paper made from virgin fiber. State law also permits local governments to adopt similar policies for the purchase of paper products. Several municipalities, including New York City, have established policies for a 10-percent price preference for recycled products when awarding bids for the provision of goods. The Town will consider action to establish a similar price preference procurement policy for paper and possibly other recycled materials.

Market information is also available through the following sources:

- The NYSDED provides free market information and materials marketing advice for recyclables in and around New York State. The NYSDED provides marketing assistance for both municipalities and for-profit businesses. The NYSDED was contacted and their most recent market listing for the Long Island region was requested. The market list, as obtained from the NYSDED, is presented in Appendix R-L. The Town will contact potential markets on this list as needed in the future to supplement their existing marketing efforts. In addition, the "Status of the Markets", published by the NYSDED, is available free of charge to municipalities and local recycling businesses. This document provides updated markets information for various types of materials.

- Industry trade associations are often useful sources of information regarding markets for industry-specific materials, such as paper, glass, plastic, or metals.

6.8R PUBLIC EDUCATION AND PROMOTION

An effective public education and promotion program is critical to the success of any recycling effort. The residents and commercial establishments separating their recyclable materials must understand where and when the recyclable materials will be collected and how the recyclable materials must be prepared so that they are marketable. In general, recycling program efforts should strive to achieve two main purposes: first, to obtain high participation rates; and second, to keep those rates high. The campaign should be comprised of both project promotion and public education. These two elements should be

designed to be integrated with project implementation efforts. Activities that fall under the broad heading of promotions are usually short-term and involve imparting specific information to a wide audience. On the other hand, education programs aim to instill lasting change and tend to be aimed at long-term communication channels such as school curricula, business policies, and community standards. An overview of the promotional and educational activities planned for the Town's recycling program is provided in the following paragraphs.

6.8.1R Education

The Town is planning to conduct seminars for high school students in areas such as "new age" environmental buying habits, over packaging problems, "precycling" efforts, hazardous household products alternatives, and other appropriate issues as they arise. The Town will continue to cooperate with teachers in exploring recycling opportunities within the classroom. To assist the commercial establishments in implementing recycling programs to comply with mandatory recycling laws, educational seminars will be conducted for local businesses. The Town will also have business community contacts for continuous assistance and recycling education.

The Town also sponsors a television program about recycling. "The Recycling Show" airs on channel 25, from 6:00 to 7:00 p.m. on Tuesday evenings. It is a "how to" show featuring information on waste reduction, source separation, recycling and reuse, and composting. The program is educational and reaches a wide audience. It can also be video-taped for subsequent use in the classroom.

6.8.2R Promotion

The following are brief descriptions of some promotional materials that have been developed:

- Brochures: The Town has recently completed two brochures. The first, "How to Participate in Southampton Town's Mandatory Recycling Program," is a comprehensive brochure on the Town's waste management and recycling program. The second brochure is entitled "How to Compost at Home". This brochure provides step-by-step instructions on how to build and maintain a compost pile around your home or business. The brochure describes the importance of home and business composting and how it interacts with the Town's recycling program.

- Media: The Town has also sponsored "The Recycling Show." "The Recycling Show" is an informative and entertaining local television show that covers a wide variety of topics pertaining to waste reduction, source separation, recycling and reuse, and composting. "The Recycling Show" is a weekly one-hour show, aired on channel 25 from 6:00 to 7:00 p.m. on Tuesday evenings.

- Newsletters: The Town began distributing a newsletter "Wastelines" in 1990. "Wastelines" is devoted exclusively to solid waste management issues such as waste reduction, source separation, reuse, and composting.

- Hotline: The Town has established telephone numbers for residents and commercial establishments to inquire about recycling opportunities. These "hotlines" are identified in the Town's brochures and newsletter as well as on "The Recycling Show."

Over the course of the next few years, the focus of the Town's information and educational efforts will shift towards maintaining high participation rates and dealing with specific areas, materials, or other program components that are not attaining desired results. The Town will continually remind the general public of the importance of their participation through ongoing promotional efforts. Also, new recycling programs or the addition of new materials to existing programs will be promoted appropriately. Specifically, potential program enhancement initiatives to be implemented on an as-needed basis include the following:

- enhanced enforcement;
- enhanced public awareness and education;
- evaluation of processing needs;
- commercial waste audits; and
- commercial recycling and reduction program development.

6.9R STAFFING REQUIREMENTS

The Town has established a recycling program working group as proposed in the Original SWAMP. This recycling program working group consists of the Town Supervisor, Sanitation Supervisor, and one Town Board member. The recycling program working group is responsible for administering the development and implementation of the Town-wide source separation and recycling program. At this time, the Town believes that the existing

recycling working group is adequate to handle the implementation of the upcoming activities. However, the Town will continue to review existing administrative manpower needs and future projections as the program develops.

Although program implementation will involve numerous new activities, the Town will maintain its current workforce to handle the additional recycling operations. However, with the start-up of the integrated solid waste management facility, the Town intends to increase the number of its recycling operations staff. The Town will shift personnel within its existing workforce from current duties to recycling operations to the extent practical. Additional personnel will be hired only if required.

6.10R FUNDING SOURCES

Funding of recycling equipment and operational activities can be achieved through a combination of sources. Available options include, but are not limited to:

- Public Funds: The extent to which recycling activities can be funded or financed through other sources will ultimately determine the amount of the Town funds required to finance the recycling program. Monies to fund recycling activities, among other solid waste projects, are generated through the tipping fees charged for the use of the Town's disposal facilities. However, the Town anticipates the issuance of General Obligation Bonds (at a 7 percent interest rate) for financing the design, construction and operation of integrated solid waste management facility. The Town will be responsible for making debt service payments on the bonds issued. Details of the financing arrangements will be developed during vendor negotiations.

- Private Sector Investment: The Town will pursue private sector investment as a means of reducing its financial burden in project development.

- Local Resource Reuse and Recovery Program (LRRRP): The Town will seek funding from the NYSDEC's LRRRP grant program, which provides grants for promotional and educational efforts associated with recycling activities and programs.

- New York State Environmental Facilities Corporation (EFC): The EFC provides technical and financial assistance to industries and municipalities for environmental regulations and projects. Technical assistance is provided through project design, implementation, and information. Financial assistance is provided through low interest loans backed by EFC special obligation revenue bonds. There are generally no set upper limits on the amount of these types of loans, which have repayment periods of up to 40 years.

- Solid Waste Management Act of 1988: This Act provided a substantial amount of money to State agencies and municipalities to design and implement solid waste management plans and projects.

The Town will explore each of these potential sources of funding to determine the exact amounts of money available, the terms of grants or loans, application procedures, and what items are eligible for financial assistance.

7.0 MIXED WASTE PROCESSING SYSTEMS

7.1 TECHNOLOGY EVALUATION

In order to develop a long-term solid waste management program that will be in accordance with the previously described NYSDEC hierarchy, the selected mixed waste processing system has to be reliable, environmentally acceptable, economically feasible, and compatible with the Town's recycling program. The selection of such a waste processing system requires a review of many types of processing technologies. In order to properly evaluate state-of-the-art technologies, review of the latest technical, environmental and economic information available for several diverse types of solid waste processing systems is necessary.

Because several processing technologies are in various stages of development or refinement, which could affect the utility of their application in Southampton, and because project design and construction will require certain minimum standards of technical and financial experience and resources, the Town on February 21, 1989, issued a Request for Expressions of Interest (RFEI) to solicit information from interested solid waste processing system vendors. This information included technical, environmental, economic, and financial data from interested, capable and experienced vendors. Advertisements for the RFEI were placed in the "Waste Age" and "Bio Cycle" periodicals and were also sent to many prospective vendors. Responses to the RFEI were received in late March and April 1989 from 22 companies, who submitted a variety of material.

The RFEI was also intended as a means for vendors of new and emerging technologies to provide data on potentially successful processes, and the information obtained was used, in part, in the evaluation of technologies with regard to the issues stated above and in the development of the Town's solid waste action management plan. No attempt was made to rank, prequalify or disqualify any vendors. However, the RFEI stated that systems which emphasized the potential for recovery, reuse and recycling of materials in accordance with the hierarchy of the New York State Solid Waste Management Plan were preferred.

A list of vendors who submitted responses to the RFEI and their respective technologies is presented in Table 7-1. Note the wide variety of systems that were proposed in the 22 responses.

While the submittal of this RFEI information was of considerable value, and the submitted information was used in part to complete the technical and economic evaluations in this report, it is also recognized that other companies, or design systems may be appropriate, and the entire range of MPI and CRS experience has been applied to this evaluation.

Based on responses to the RFEI, available technical information, and MPI-CRS experience, the following mixed waste processing systems have been described and evaluated by various criteria. The basic evaluation criteria used were technical information, environmental impacts, and implementation issues. The technical information describing each processing technology included equipment, process flows, process by-products, and materials recovered and disposed. The environmental criteria included potential and unavoidable environmental impacts, mitigation measures, and any growth inducing aspects of each technology. Finally, the implementation criteria included issues concerning factors that may affect the implementation of each processing system such as costs and procurement methods, project financing, energy material and energy markets, and technical reliability and feasibility.

In order to structure the discussions and evaluations of generic as well as specific technology systems, we have grouped them into the following general categories:

- Front End Processing (which is not a complete technology in itself, but has many common elements that are necessary or applicable in conjunction with other technologies for preliminary processing and removal/recovery of materials).

- Solid Waste Composting (which is usually accomplished after some front end processing).

- Co-composting of Solid Waste (with sewage sludge, if available).

- Waste Distillation

- Waste to Energy (combustion) Systems (which may or may not be done in conjunction with front end processing).

TABLE 7-1

TOWN OF SOUTHAMPTON
RFEI VENDOR RESPONSES

Vendor	System Technology
1. Agripost	MSW composting
2. American Recovery Corporation	Materials recovery with RDF production and MSW composting
3. Bedminster Bioconversion	In-vessel MSW composting with sewage sludge
4. Daneco	MSW composting with sewage sludge
5. Empire Return Corporation	Materials recovery facility
6. Harco Waste System	Materials recovery and RDF production
7. International Process Systems	In-vessel MSW composting with sewage sludge
8. Katy-Seghers	Mass burn refractory wall furnace
9. Labov	Fluidized bed reactor (RDF)
10. National Recovery Technologies	RDF production
11. National Resource Recovery Systems	Materials recovery/in-vessel MSW composting
12. New England CR, Inc.	Materials recovery facility
13. Purac Engineering	In-vessel MSW composting with sewage sludge
14. Resource Systems Corporation	In-vessel MSW composting (Dano drum)
15. R. Cave and Associates	Recycling program development
16. Reuter, Inc.	Materials recovery with MSW composting and RDF production
17. Trash Reduction System	MSW composting with sewage sludge or RDF production
18. Waste Distillation Technology	Destructive distillaton
19. Waste Processing Corporation	In-vessel MSW composting (Dano drum)
20. Waste Recovery Resources	MSW composting (static pile)
21. Westinghouse	Materials recovery with mass burn
22. WPF Corporation	Materials recovery and MSW composting

7.1.1 Front End Processing

Introduction

The mechanical processes employed in the "front end" of an MSW facility, and/or extracting and conditioning its several reusable components, are heavily influenced by the the various objectives of the entire facility. The "front end" does not stand alone but must be viewed as a portion of a whole facility, which usually removes and recovers certain potentially recyclable materials and may subsequently produce a compost feedstock, an RDF fuel, or a combination of the two.

A mixed waste processing system dedicated, in part, to the capture of a high percentage and variety of recyclables, employs much the same equipment for front-end processing of the incoming waste stream as does a source separated processing system designed for processing heavily commingled incoming source separated recyclables. The similarity of the equipment employed increases as the variety of source separated components which are commingled increases.

The considerations which determine the choice of equipment, process flow, and machinery alignment include the following:

- The composition of the waste stream with regard to type, quality, quantity, and proportion of recoverable materials.
- The marketability of the materials to be recovered.
- The condition or form in which recovered materials must be prepared for acceptability to the markets.
- The type or types of final waste processing planned:
  - Composting - may require removal of contaminants and sizing of final product.
  - Incineration - possibly requiring the production of refuse-derived fuel (RDF) with a minimum of ferrous and/or aluminum content.
  - Landfilling - the area available and dedicated to landfill, which may determine the allowable quantity and type of system residue.
- The capital and operating costs associated with materials handling of MSW, along with extracting and conditioning the recyclable components.

- The requirement for redundancy in the event that one or more pieces of equipment experience planned or unplanned downtime and the effect upon overall plant downtime.

Processes

The extraction of reusable components from the MSW is accomplished through the utilization of one or more of the following processes:

- Size reduction
- Air classification
- Screening
- Magnetic separation
- Aluminum and glass separation
- Drying and densification

Ancillary equipment includes:

- Conveyors
- Storage and retrieval bins
- Cyclone separators
- Explosion and fire control systems
- Dust collectors
- Electrical equipment and controls

Table 7-2 lists most major unit processing equipment categories that have been incorporated in the "front end" of mechanical processing facilities implemented to date.

A brief description of the types and operating functions of major equipment often used in front end processing is provided below.

Equipment

Size Reduction/Shredders - Some form of size reduction is usually an essential step in front-end processing operations. The reduction in size enhances ease of handling, and renders the dimensions of bulky items compatible with those of the processing equipment. Size reduction brings about a degree of uniformity (a requirement of most mechanical sorting systems) in terms of the maximum particle size of the diverse components of the incoming waste stream.

The hammermill is a type of impact crusher in which a combination of forces is applied to the throughput material by rotating elements (hammers) that strike particles of the material while they are in sus-

TABLE 7-2

TOWN OF SOUTHAMPTON
MECHANICAL EQUIPMENT USED IN MATERIALS RECOVERY SYSTEMS

1. Size Reduction/Shredding

   a. Hammermills - vertical and horizontal shaft
   b. Shear shredder
   c. Rotary, guillotine, and scissors-type shears
   d. Grinders - roller, disc-mill, ball mill
   e. Flail mill
   f. Knife mill

2. Air Classifiers

   a. Vertical straight
   b. Vertical zig-zag
   c. Vibrating inclined
   d. Horizontal straight
   e. Inclined rotating drum
   f. Density separators (stoners, etc.)
   g. Air knife

3. Screens

   a. Trommel
   b. Vibrating - reciprocating and gyrating
   c. Disc

4. Magnetic Separators

   a. Belt-type
   b. Drum-type

5. Glass and Aluminum Separators

   a. Heavy media separation
   b. Aluminum magnets (eddy current separation)
   c. Hand sorting

6. Densifiers

   a. Pelletizers
   b. Briquetters
   c. Cubers
   d. Extruders
   e. Compactors
   f. Balers
      (1) Rectangular prism shapes
      (2) Flat cylindrical shapes
   g. Can flatteners

TABLE 7-2 (Continued)

TOWN OF SOUTHAMPTON
MECHANICAL EQUIPMENT USED IN MATERIALS RECOVERY SYSTEMS

7. Handling Equipment

   a. Front-end loaders
   b. Grapples
   c. Conveyors - belt, apron, bucket elevator, pneumatic, drag
   d. Forklifts

8. Hand Sorting

   a. Depends completely on the specific objectives of the system design and on the safely, environmental protection of workers and the economics of hand picking vs. the use of equipment.

pension, or that hurl the particles at a high speed against stationary surfaces.

Low-speed, low-energy flail mill type shredders and shear shredders are used for the coarse shredding of MSW and the liberation of refuse from plastic bags.

The high-speed shredders, while capable of producing a small, uniformly sized product, require frequent rebuilding and replacement due to the tough and abrasive nature of the materials found in solid waste. They are also much more likely than low-speed shredders to be involved in explosions, and special attention must be paid to providing for that eventuality in terms of safety to people and equipment.

Highly sophisticated equipment is available for the detection and suppression of fires and explosions. Detection may be accomplished photoelectrically, thermally, or optically. Fire and explosion protection systems generally utilize Halon 1301 - a colorless, odorless gas, which provides an inert atomosphere in disrupting the chemical chain required to support combustion.

Hammermills can be divided into two broad groups on the basis of orientation of the rotor, namely horizontal and vertical. Both types have elements that rotate within the shredder and affect particle size reduction through collision with the infeed material. The elements are referred to as hammers and they may be rigidly attached to the shredder rotor or freely hinged (swing hammers). The horizontal swing hammer, whose principal parts are the rotor, hammers, grates, frame, and flywheel, is the type most commonly used. Its rotor and flywheel are mounted through bearings to the frame. The bottom portion of the frame also holds the grates.

Operational Shredding Alternatives - Coarse or primary shredding, grinding, or milling, usually to a minimum particle size of about 4 inches, is a feature of many MSW facilities. Oversize bulky waste (OBW) is often handled by a separate shredder (flail mill, hammermill, or shear type) and the product later joined with the main MSW stream for further processing. Secondary and even tertiary shredding (collectively called "fine" shredding) are introduced whenever a particle size significantly

smaller than 4 inches is specified, as for example in the production of refuse-derived fuel (RDF). Thus, the particle sizes of RDF "fluff" usually are within the range of 1 to 3 inches. Other applications in which fine shredding may be involved are the recovery and processing of ferrous, aluminum, and glass scrap to meet user specifications.

Air Classification - Air classification finds its use in materials recovery principally as a means of separating materials of different densities from the solid waste stream. Lighter refuse components are suspended in the air stream, while heavier ones settle out of the stream. The suspended fraction is conventionally termed "air classified light fraction," or simply as "lights," and the settled fraction is known as the "heavies." The unit in which the air classification takes place is designated an "air classifier."

In air classification, paper and plastic tend to be concentrated in the light fraction while metals and glass constitute the principal components of the heavy fraction. The quality of the magnetically recovered ferrous fraction [see Magnetic Separators below] can be substantially improved by removal of residual paper and plastic in an air classifier or in an air knife version of an air classifier.

Screening - Screens can be used in solid waste processing to achieve an efficient separation of refuse particles on the basis of differences in physical size in any two dimensions. The separation results in a division of the incoming material into two size groups in which one has a minimum particle size larger than that of the individual opening of the screen (or perforated plate), and the second, a maximum particle size smaller than that of the openings. The former are retained on the screen (oversize particles, "oversize"), whereas the latter pass through it (undersize particles, "undersize").

Although several types of screens are used in industry, only three have been used for sizing particular fractions of processed and unprocessed municipal solid waste. The three types are the vibratory flat bed screen, the disc screen, and the trommel screen. The trommel screen is most common and has been proven to be quite effective and efficient.

Magnetic Separators - Magnetic separation is a relatively simple process used to recover the ferrous metal fraction from MSW.

An electromagnet or permanent-type magnet may be utilized in the head pulley of a conveyor, in one or more rotating drums placed in the vicinity of the conveyed mixed material, or along a length of conveyor belt.

Aluminum and Glass Separators - A number of technologically complex processes have been utilized or proposed for both aluminum and glass separation. For aluminum, heavy media and eddy current separation are possible. Of these two processes, eddy current separation, which causes aluminum to be ejected from the waste stream due to electromagnetic flux, is the more commercially feasible as of this writing.

For glass, both froth flotation and optical electronic sorting have been used, but it is not expected that either of these methods would be economical for Southampton.

Mechanical Processing Systems

The typical alignment of equipment of a front-end mixed waste processing system, which is part of a facility producing RDF, employs a great variety of machinery and is quite similar to that used in the preparation of good quality compost feedstock from MSW (Figure 7-1).

Less processing of the incoming MSW stream and fewer pieces of equipment are required if:

- There is no intent to maximize the recovery of recyclables.
- There is no intent to minimize the waste to landfill.
- The final processing is a mass burn facility which is tolerant of impurities in the solid waste fuel.
- The compost product is permitted to contain a high percentage of contaminants.

One or more source separated recyclables may be combined with similar recyclables extracted from the MSW stream. Figure 7-2 illustrates the concept. The combining of similar recyclables can take place at an

MRF, MSW facility, or an integrated facility for any necessary further processing (i.e., sorting, delabeling, crushing, baling, etc.).

Various front-end processing systems are commercially available, some of which are proprietary in nature. Some of these systems (or sub-systems) are developed around one or more specialized pieces of machinery (i.e., shredder, screen, baler), but the basic processes for any given final product (i.e., RDF fuel, compost feedstock, or a combination of the two) commonly include all or some portion of those identified in Figure 7-1.

The influence of the composition of the incoming waste stream on the design of a mechanical processing system is illustrated in Figure 7-3 which represents the steps generally employed in the processing of commercial mixed wastes (as opposed to a combined residential/commercial waste stream.)

Commercial mixed waste delivered to the facility may be taken through the following steps:

1. Trommel Screen - which separates the waste stream by particle size. A proper screen design will assure that virtually all of the glass will accompany the small fraction, while most of the corrugated will accompany the large fraction.

2. Magnetic Separator - both the oversize and undersize fractions from the screen are subjected to magnetic separation where the ferrous fraction is extracted

3. Manual Sorting - for the oversize fraction, manual sorting is used to separate the corrugated, newsprint, and plastic components. Depending upon the quantity, particularly of corrugated and newsprint, the end products may be baled. The material remaining after manual sorting may be suitable as RDF if it is combustible compost feedstock, or it becomes a process residue. For the undersize fraction to meet market specifications, sorting may also be used to remove other recyclables with the glass going through a crusher.

Mechanical processing systems can be designed to integrate material and RDF recovery as well as compost preparation in one facility. Provision can be made in an integrated facility to not only handle an unrefined incoming MSW stream but also to handle all of the source separated items that a typical MRF facility may be designed to handle. Because of the impact on the sizing of a processing facility, the concept

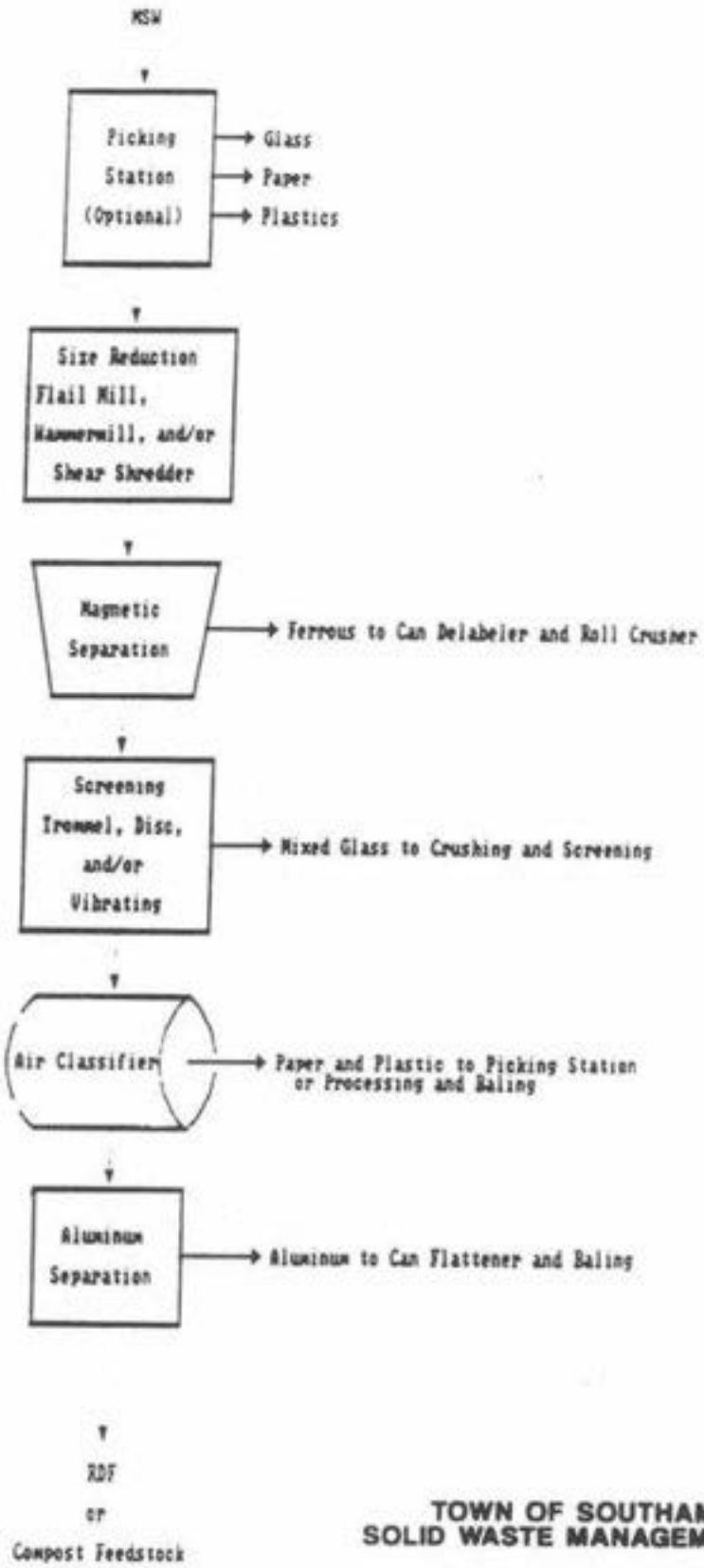

TOWN OF SOUTHAMPTON
SOLID WASTE MANAGEMENT PLAN

TYPICAL RDF/COMPOST FRONT END PROCESSING FLOW DIAGRAM

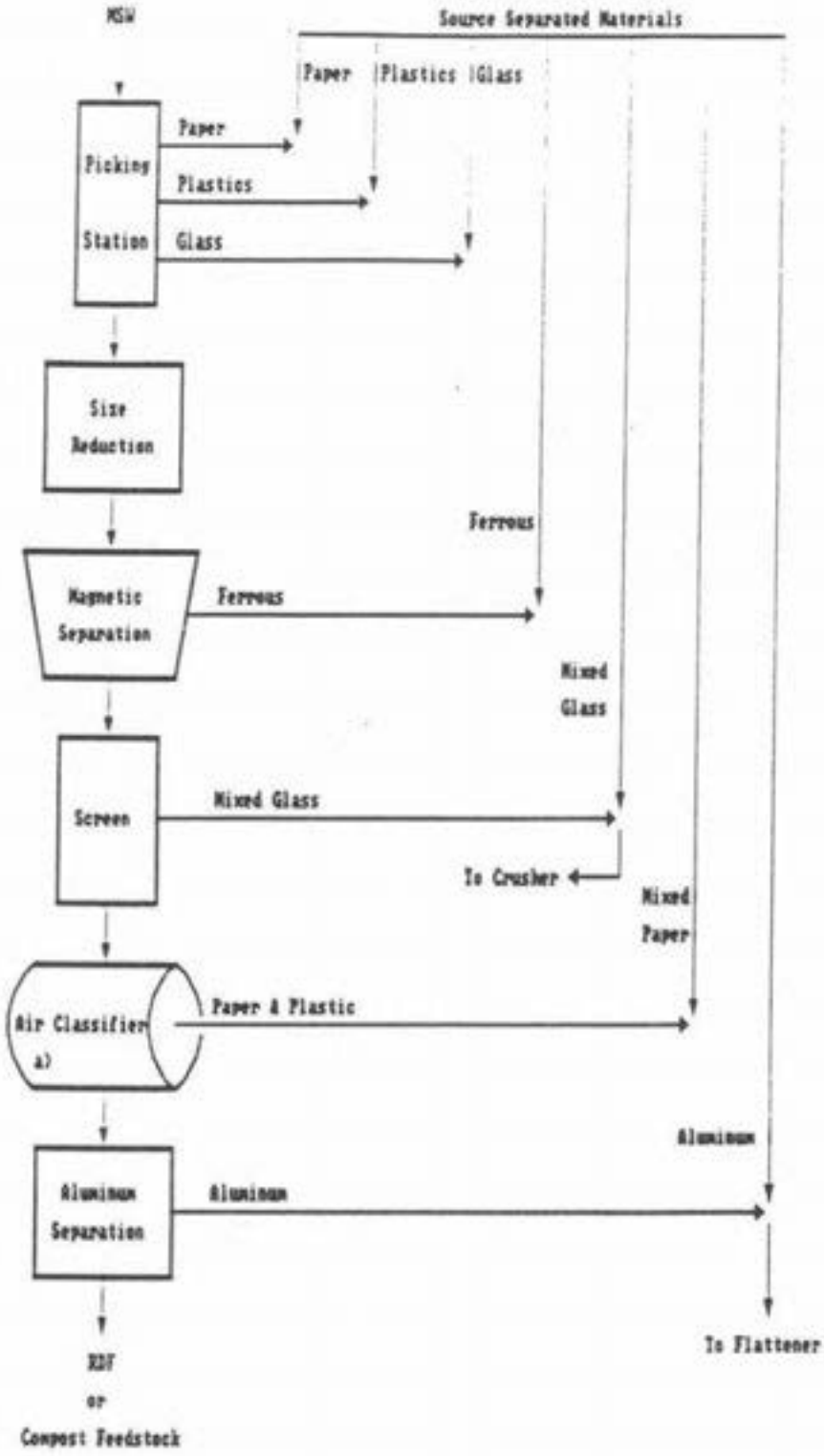

Note:
a) Air Classifier processing not required when producing RDF

TOWN OF SOUTHAMPTON
SOLID WASTE MANAGEMENT PLAN

COMBINED RDF/COMPOSTING FRONT END PROCESSING WITH SOURCE SEPARATED MATERIALS

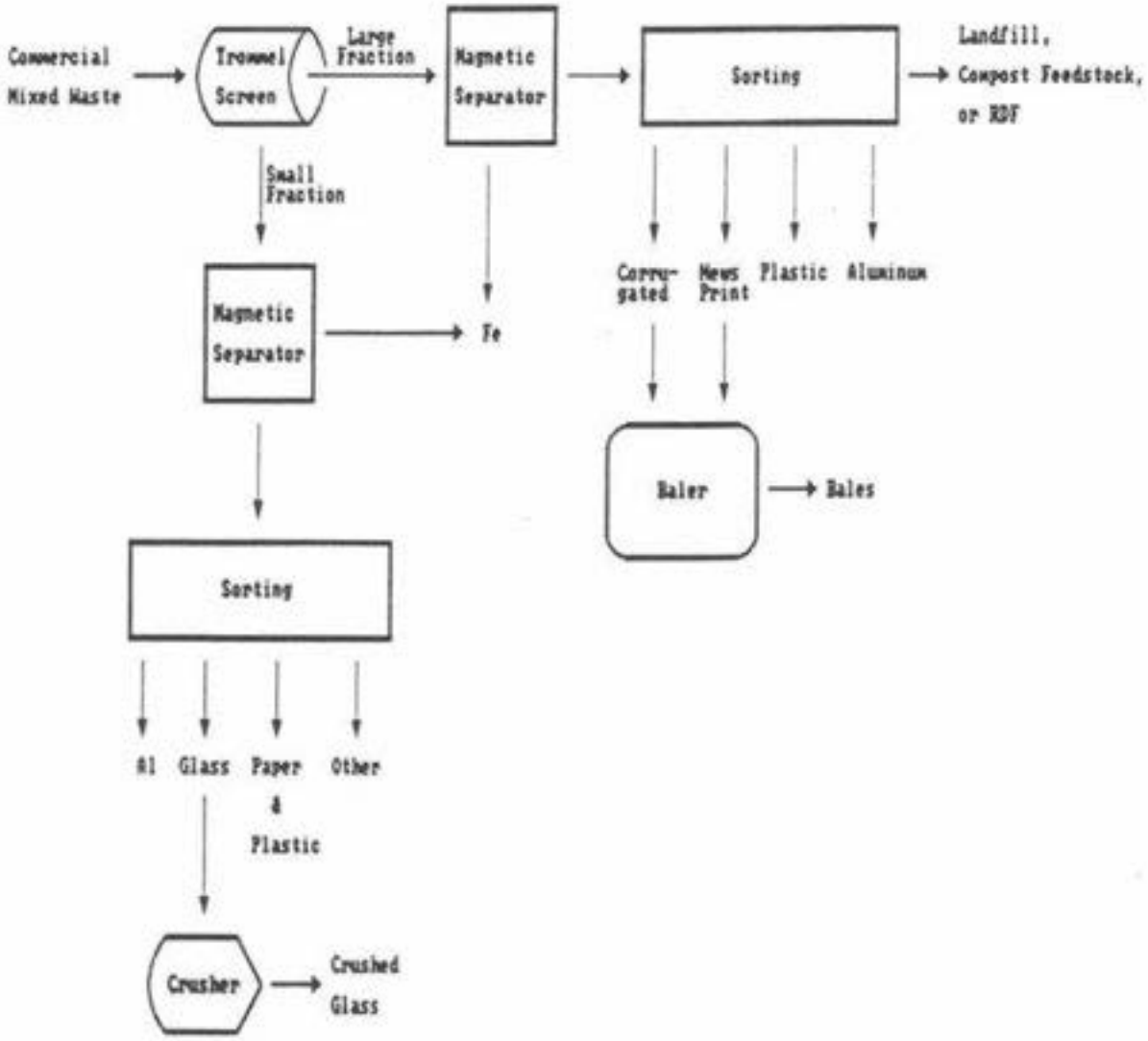

TOWN OF SOUTHAMPTON
SOLID WASTE MANAGEMENT PLAN

COMMERCIAL MIXED WASTE PROCESSING FLOW DIAGRAM

of integrating an MRF operation with that of an MSW processing operation is discussed in some detail in Section 5.0, Integrated Waste Management Concepts, and illustrated in Appendix H. It is important to recognize that source separation of recyclables can substantially ease the burden on an MSW facility in terms of the size and variety of equipment necessary to process the reduced waste stream.

Front-end processing systems are relatively complex, mechanically, and employ large, heavy-duty pieces of equipment to perform the work of size reduction, material separation, and conveying of the various components of the waste stream. The heterogeneous nature of the incoming waste stream makes it impossible to predict the composition with sufficient precision to safeguard against all conditions which might cause equipment or system failure. And, indeed, the industry history offers numerous examples of failure and the need for expensive retrofit. However, there are systems which work well and these serve as examples to emulate.

Comments on the Waste Stream

Regardless of the degree to which the incoming waste stream is specified to be source separated, it must be recognized that there will be some contamination of the waste with materials other than those specified. Manual sorting may be provided to handle this eventuality. Similarly, each piece of mechanical processing equipment may extract material other than that which was planned. Extraneous material may become entrapped or entrained with the desired separated material and may have to be manually removed.

The selection and sizing of components and the design of the system can only be done properly after consideration of all the pertinent facts, and definitive assessment of the quantity and quality of the incoming waste and the quality of marketable end product desired.

7.1.2 MSW Composting

The composting of municipal solid waste has been practiced over the past several decades in a number of countries, including the United States, Europe, and Japan. Early technologies utilized little or no

pre-processing of the waste to remo inorganic materials prior to initiation of the stage of biodecomposition, i.e., composting. While the compost product using these technologies could be rendered biostabilized, its appeal and utility as a soil amendment were severely compromised by the inherent inorganic contamination. The major contamination included glass, metals, plastics and other items such as commercial or household hazardous waste that could render the compost unusable, while the plastics made the product unsightly.

Present composting tecghnologies employ front-end processing to remove many of the inorganic contaminants prior to the biodecomposition. The reason is to improve the quality of the product, thus increasing the acceptability of the recovered compost. Depending upon the requirements of availabile markets, the product from the composting process may then be further processed (post-processed). Post-processing commonly includes a final stage of size reduction and screening of the product. One of the main reasons for considering composting for the treatment of MSW or organic residues is that composting can, when properly conducted, render wastes hygienically and environmentally innocuous in an acceptable manner. As noted above, while there is no question that composting of various wastes can be done, many practical difficulties have prevented composting systems from becoming widely used on a successful basis in the U.S. in the past. This section discusses some of the theory and overall considerations that are important to an evaluation of a mixed waste compost system for MSW in Southampton.

Definitions - In order to distinguish composting from the biological decomposition that takes place in nature, we define composting as a method of waste treatment in which solid wastes are biologically stabilized under controlled conditions. The term "stabilized" refers to a state in which a treated waste (the compost) would not be a source of nuisance if left unattended. The phrase "under controlled conditions" serves to distinguish an MSW disposal system utilizing composting from ordinary biological decomposition. This application has all the advantages and disadvantages of biological waste treatment systems, among which are the following:

Advantages:

- Produces a product that is considered recyclable under the NYSDEC hierarchy criteria, and may therefore be preferred over other systems.
- The potential for lower capital and operating costs than for competing systems.
- May be more publicly acceptable than a facility that uses some form of incineration.
- Can be processed in combination with sewage sludge (co-composting)
- Landfill requirement can be minimized if product can be totally marketed.
- Product can be used as a landfill cover or landfilled as a last resort, providing significant volume reduction.

Disadvantages:

- Relatively undeveloped status of commercially available systems in the U.S.
- Difficulty in obtaining long-term facility guarantees with the risks that are associated with this technology for the Town.
- Longer time required for processing than that with non-biological systems.
- Product may contain toxics from newsprint and other feedstock.
- Lignaceous composition of waste paper is resistant to decomposition.
- Requirement for complex multiple pieces of equipment or large equipment, for front-end and post-processing.
- Larger land requirement.
- Low monetary value (if any) and potential difficulty in marketing product, and the seasonal nature of compost markets.

Classifications - There are several classifications of composting. The three most useful are aerobic vs. anaerobic, mesophilic vs. thermophilic, and windrow vs. enclosed. Since almost all enclosed systems are proprietary, an alternative to the third classification is proprietary vs. non-proprietary. In enclosed systems, the composting material

usually is contained inside a structure that may be in the form of a horizontal drum, a silo, or a bin. Modern composting usually is aerobic and is characterized by a thermophilic (high temperature) phase.

Principles of Composting

Principles of composting are important because of their special impact on process design, operational parameters, compost technology, and utility of the product. Since composting is a biological process, satisfactory composting depends upon the presence of a sufficiently large population of microorganisms capable of utilizing the wastes to be composted as a substrate. Generally, the microbial population indigenous to a waste is large enough to carry on the composting process. This situation will continue to prevail in the foreseeable future despite the development of new microbial strains through genetic engineering.

Since microbes are the principal active agents in composting, factors that affect their growth and activity also determine the rate and extent of the composting process. The more important of these factors are nature of substrate, nutrients, carbon-nitrogen ratio (C/N), particle size, oxygen availability (aeration), moisture content, pH, and temperature. In composting, the substrate is the waste to be composted. Almost all organic wastes of biological origin are amenable to composting. The rate and extent to which a given waste can be com- posted are determined by the concentration of essential nutrient elements in the waste and by their biochemical availability to the microbes.

The macro-nutrients for microbes are carbon (C), nitrogen (N), phosphorus (P), and potassium (K). Included among the micro-nutrients are cobalt (Co), manganese (Mn), magnesium (Mg), copper (Cu), and several other elements. Calcium (Ca) is somewhere between the macro- and micro-nutrients. With the exception of C and N, most of the essential nutrient elements are present in agricultural wastes and in the organic fraction of municipal wastes in the amounts required by the microbial population.

The amounts of C and N required (C/N ratio) are determined by the relative amounts of C and N used by the microbes in metabolism to obtain energy, and in the synthesis of new cellular material. Microbes oxidize a part of the carbon to meet their energy needs. Microbes also synthe-

size a part of the carbon into cell wall or membrane, into protoplasm, and into storage products. The only major consumption of nitrogen is in protoplasm synthesis. As a result, the optimum C/N is on the order of 20/1 to 25/1. The particle size of the material to be treated has a significant bearing on the rate of composting. The higher the ratio of surface area to mass per particle, the more rapid is the rate of composting. Consequently, one would expect that the smaller particle sizes would be accompanied by higher composting rates. However, difficulties in maintaining the required porosity in a composting mass, combined with the cost of size reduction, place a lower limit on particle size in a practical operation. For MSW, the size reduction equipment should be selected to provide a size range from 0.5 inches to 1.5 inches to meet the porosity requirements of the composting mass and result in a reasonable composting rate.

Aeration is a very important factor because of its beneficial effect on rate of composting and its negative effect on the production of foul odors associated with anaerobic decomposition. Theoretically, the amount of oxygen required depends upon the quantity of carbon to be oxidized. In a practical operation, it would be extremely difficult to arrive at a precise determination of the O_2 requirement on the basis of the carbon content of the waste. One reason is the need to know the precise fraction of carbon that will actually be converted into bacterial cellular matter. A second reason is the difficulty of accurately determining the amount of carbon that is inaccessible to the microbes. Theoretically, the optimum moisture content in composting would be saturation, because at that level moisture would not become a limiting factor. However, in practice, several factors render such a level unsuitable. Because of this, the designation "maximum permissible" moisture content is used. It is the highest moisture content at which potential, undesirable consequences are not realized.

Permissible moisture content and O_2 availability are closely related in most of the modern composting methods. They are related because the O_2 for the microbes is supplied from the air entrapped within the voids between the particles of waste. The maximum permissible moisture content is the level at which sufficient air is left in the voids

to assure an adequate supply of O_2. Accordingly, permissible moisture content implies a level at which no nuisance develops and the process proceeds satisfactorily.

The greater the structural strength of the material, the higher is the permissible moisture content. If the particles have a poor structural strength, the permissible moisture content is lowered. Therefore, for mixtures in which paper is the major material (e.g., municipal refuse), the upper permissible moisture content is only 55 percent to 60 percent. The critical pH range in composting is broad. An acceptable pH range for compost is roughly between 5.5 and 7.6. Consequently difficulties due to high or low pH levels are rather rare. An exception could be in the composting of fruit wastes, in which case the pH might drop to 4.5.

Temperature - Several articles have been written about the relative merits of thermophilic vs. mesophilic temperatures with respect to composting. On the one hand, an important benefit of reaching thermophilic conditions is the destructive effect on pathogenic organisms. On the other hand, at temperatures of 150 degrees F and higher, the compost process is slowed or may even come to a complete stop. Consequently, if it can be done economically, the peak temperature should not be allowed to exceed about 140 degrees F.

Monitoring the Composting Process

Normally, the temperature of the material to be composted increases from ambient levels to about 100 degrees F within the first two to three days. After approximately one week, a high temperature plateau is reached. At this level, temperatures fluctuate between 140 degrees and 170 degrees F. The high temperature plateau may persist over a one to three-week period. Under less than satisfactory conditions the plateau may last much longer. It may be assumed that by the time the temperature has dropped to ambient or a few degrees above, the more biologically unstable compounds will have been stabilized. At this time, the material is sufficiently stable for storage or for utilization. Sharp deviations from this temperature profile indicate a need for remedial measures.

Recently, it has become popular to divide the compost process into two stages, the active (composting) stage and the maturation (curing)

stage. The active stage is the period of rapid temperature rise and plateau. The maturation period is the period of temperature decline.

Odors - If the process is managed properly, within a few days the odor of the raw waste should be replaced by a diverse collection of odors. Depending upon how well the process is advancing, the odors range from a faint cooking odor to that of putrefaction, and at times, of ammonia. Eventually, all odors give way to an earthy odor. A putrefactive odor is indicative of anaerobic conditions. With a windrow operation, the onset of objectionable odors is a signal for checking for excess moisture content and increasing the frequency of turning in order to accelerate evaporation as a remedy. With an enclosed digester, the development of foul odor indicates the need to increase the air flow through the unit and to agitate the reactor contents more vigorously. By monitoring the variables of temperature, O_2, moisture, and pH level, action can be taken to minimize the generation of foul odors.

Parameters in addition to temperature rise and fall and odor production are O_2 consumption, CO_2 production, and rate and extent of destruction of volatile matter.

Composting Technology

In its broader sense, the technology of composting involves the preparation of the raw material (feedstock) via some form of front-end processing as previously discussed, the compost process itself, and the grading and upgrading of the final product.

Municipal solid waste is the waste for which preparation is most essential. Consequently, preparation of MSW for composting is the most extensive and expensive, and it can also be the most critical step in the overall processing system, since failure to produce a good compost feedstock can have a major impact on the quality and marketability of the final product as well as the economics of the system. On the other hand, most agricultural wastes and residues that are relatively uncontaminated may only require some size reduction and screening.

The sequence of size reduction and sorting for MSW is flexible, although the present tendency is to precede the size reduction with sorting. Sorting involves the removal of items that are undesirable, either because they may have a negative impact on the compost process or

because they may lower the quality of the compost product. Sorting can be accomplished manually or mechanically. Mechanical sorting can be carried out through a series of steps which may include magnetic removal of ferrous materials, air classification, and screening to remove metals, plastics and glass components.

The area requirements for a municipal solid waste composting system employing either the turned windrow or the statis pile processes depend upon the quantities processed; the exact composting process employed/ and storage allowances for tipping floor storage and for product storage. Over a range of reasonable assumptions, a turned windrow or statis pile composting system sized for the Town's waste supply could be expected to require 8 to 12 acres, however this is only part of the area required for the whole system. The following estimates are the total area requirements for a solid waste composting system:

Infrastructure Site Work	1.0 acres
Roads and parking	1.0 acres
Front end processing	4.0 acres
Composting system	8.0-12.0 acres
Post processing	0.2 acres
Loading and transport	0.3 acres
Curing and 6-month seasonal storage (25 ft high piles)	2.0 acres
Approximate Total Area	16.5-20.5 acres

Compost Systems

The general objective of all equipment in composting is to provide optimum environmental conditions for the microbial agents involved. This must be carried out without endangering the public health, adversely affecting the environment, and within the constraints of economic feasibility.

The environmental factor of most concern has become aeration. Accordingly, the emphasis in equipment design is usually on the development of effective aeration systems.

Methods of Aeration - The ultimate aim in the design of aeration equipment is to provide an adequate supply of oxygen to the microbes. Oxygen supply can be accomplished by any one of three methods or combinations thereof. Two of the methods involve physically moving the

particles into a new position and thereby exposing them to fresh supplies of air. Physical movement of the particles can be done by tumbling, stirring, or by a combination of the two. In the third method, the particles remain stationary and the gaseous environment is displaced and replaced with a new one. In such a system, called forced aeration, the air layer is constantly diluted or is replaced by air forced through the pile.

Windrow Systems - In other contexts, there is a distinction made between pile and windrow, with "pile" defined as a single mound or heap roughly in the shape of a haystack and with no physical size implied. "Windrow" is defined as an elongated pile or row of material with a cross-section roughly in the shape of a trapezoid with the size generally considered as that which can be handled by available mechanical equipment. For our purposes, the two terms are used interchangeably in this section.

Constructing a Windrow: The material to be composted is windrowed immediately after the size reduction and sorting steps. The method of setting up a windrow should be adjusted to local conditions and to the nature of the wastes. The size of the windrow is determined ultimately by its aeration requirements and by the efficient utilization of land area. The permissible dimensions of a pile depend upon the structural strength of the particles that make up the pile. With municipal refuse, the height is usually on the order of 5 ft to 6 ft. In practice, height is determined by the type of turning equipment to be used. The width of the pile depends upon convenience but generally is about 1.3 to 1.6 times the height. In cold areas, all dimensions can be increased during winter to promote heat retention. In arid regions, increasing the dimensions of the pile would minimize water loss due to evaporation.

Turned Windrow System: In the turning operation, a pile of composting material is torn down and then reconstructed. The reconstructed pile can occupy either its original position, or one immediately adjacent to the original position. The act of tearing down and reconstructing results in the replenishment of the oxygen supply.

Experience has shown that oxygen requirements in composting municipal refuse can be maintained at optimum concentration by turning the pile every third day, provided that the material is neither waterlogged nor

compacted. The latter two conditions can be remedied by increasing the frequency of turning. Frequency of turning is not determined only by aeration. Hygienic considerations, especially when sewage sludge is mixed with refuse, may require a greater frequency. According to Part 360, a minimum of five turnings is required during a 15 day period when the temperature of the mixture is not less than 55°C within six to eight inches below the surface of the pike.

There are several types of mechanical turning equipment on the market. Because of the rigors imposed by its use, the equipment must be rugged. Consequently, most turning machines are relatively expensive.

Static Windrow System: The possibility of aerating a mass of composting material by forcing or pulling air through it has intrigued designers of compost systems for more than 30 years. If made to function successfully, forced aeration has many attractive features, not the least of them are simplicity of equipment and operation and lower costs.

A windrow can be constructed for forced aeration in various ways. They all involve the piling of the material upon a grid of perforated ducts through which air can be forced into the bottom of the pile by a fan. The pile may be covered with a layer (10 inches to 12 inches) of stable material to provide insulation. Insulation ensures the simultaneous exposure of all raw material to high temperatures. According to Part 360, the compost pile must be insulated and maintained at a temperature greater than 55°C throughout the compost pile for at least three consecutive days.

For a forced-air compost system, ideally, the waste should be granular and uncompacted, have a relatively small and uniform particle size, and not be excessively moist.

Mechanical (Proprietary) Systems - Currently, there are several proprietary systems on the market. The majority of the proprietary systems are characterized by the use of a reactor in which the active stage of the compost process is intended to take place. After a brief detention time, on the order of one to six days, the composting material is removed from the reactor and is windrowed (curing stage). According to Part 360, the compost mixture must be maintained at a temperature greater than 55°C for at least three consecutive days. Because of the

variety of available systems and relatively short operating experience of some systems, as well as the difficulty of keeping abreast with the appearance of newcomers, only a few systems are described herein.

Post-Processing

The objectives of post-processing are: 1) to enhance the utility of the product, 2) to render it safe for use, and 3) to impart an attractive appearance to it. Steps 1 and 3 are accomplished by the removal of unsightly materials (e.g., plastic), and by the classification of the remaining material into fractions in which the particle size is relatively uniform. Both tasks can be accomplished by means of properly selected equipment. Prolonged storage or some form of sterilization will eliminate the pathogens or reduce their concentrations to acceptable levels.

Markets

The availability of a firm market is a key element in a successful composting program. Markets are important because: 1) an end-use must be found for the compost product, otherwise a new disposal problem would be substituted for the original disposal problem, and 2) a market may be the potential means of obtaining a financial return associated with the possible sale of the product. Although revenues obtained from the sale of the compost product would help in defraying the costs of a composting operation, it is unrealistically optimistic to expect that a composting operation would prove to be a profit-making venture. In any cost analysis of a composting operation, account should be taken of the benefit derived from a reduced requirement for landfill space and the avoided costs associated with hauling and tipping fees. Compost markets are discussed in detail in Section 7.3.1.2.

Vendors of MSW Composting Systems

Turned Windrow Systems - Several vendors are available to design and construct straight forward MSW composting systems using a turned windrow system. Several vendors may be willing to own and operate the facility, while others simply provide the equipment and design services. Usually, the system operates in conjunction with front-end manual and mechanical processing and/or sorting to remove recyclables and/or undesirables. This unit processing equipment has been previously described and may include hand picking conveyor belt stations, ferrous separators, grinders,

shredders, screening devices, and others can be integrated in various configurations using conveyor belts. The specific configuration depends on vendor preference, waste composition, and product quality desired. A typical system begins with a tipping floor where oversize bulky waste is removed. The refuse is then pushed into a trench or pit where it falls onto a conveyor belt. Bags can be opened and clumps of refuse loosened using a bag slitter or flail mill. The conveyor then passes under a magnetic device that attracts and separates ferrous metals. The remainder of the waste may be conveyed to a manual sorting station where a team of workers separates and drops recyclables, such as aluminum, glass, and cardboard, into chutes leading to storage bins. Plastic and other non-compostables can also be picked out here. The remainder of the waste, primarily compostable paper, food, and yard waste, passes through a hammermill or shear shredder for size reduction. The material can now be conveyed to a drop-off point where a front-end loader or truck delivers the ground material to the growing end of windrows. Alternatively, the ground material can be screened prior to composting. After a suitable period of composting, the material can be screened again to produce finer grades of compost.

Ecological Technologies, Inc., Ft. Worth, TX, and Environmental Recovery Systems, Inc., Denver, CO, are two system vendors who can build facilities similar to the one outlined above. Ecological Technologies adds a specially developed bacterial innoculum prior to composting, and screens the material after composting using air classification and an auger screw screen. Environmental Recovery Systems uses workers to open bags on the tipping floor, and subjects the sorted material to air classification and a 3/8" vibrating screen prior to composting. Buhler-Miag, Inc., Minneapolis, MN, is primarily an equipment supplier of waste processing equipment; however, it has licensed Wheelabrator Technologies, Inc. to distribute its equipment line. Wheelabrator can design and supply a system involving the above front-end processing, windrow composting, and more extensive post-composting processing equipment. This processing involves a second stage of grinding, a fine screening drum, and a ballistic separator that removes small stones and glass. Cholla Waste Management, Inc., Austin, TX, and Geotech Industries, Inc., Leesburg, FL,

are two vendors who sell processing equipment that can be configured for MSW composting.

The MSW composting system developed by Agripost, Inc., Pompano Beach, FL., utilizes two hammermills in series to pulverize incoming MSW prior to formation of windrows. The raw waste is delivered to a tipping pit with an oscillating steel conveyor which transfers the waste to the hammermill infeed conveyor. After double grinding, an innoculant and water are added as needed and the ground waste is delivered to the windrows. The piles are turned four times over approximately 21 days and then re-conveyed to a third hammermill. The reground product is screened and the fines are ready for bagging while the oversize material, approximately 15 percent of the reground product, is added back into the static piles. In this fashion, non-compostables and hard to grind materials are subjected to a continuous loop of grinding until they pass as fines.

Static Windrow Systems - Daneco is an Italian company with several operational plants overseas. Their process begins with shredding and ferrous separation. Two trommel screens are then used to produce a compostable organic fraction plus an oversize and an undersize fraction. The undersize fraction is mainly soil and glass that can be wet-separated into a construction aggregate. The oversize fraction tends to be plastic film and paper suitable for RDF production. The organic fraction is composted in pressure aerated static piles. After curing, the compost is shredded and screened to remove any remaining undesirables.

Mechanical Systems - Mechanical MSW composting systems take advantage of a closed or open-top vessel to contain and regulate the ground material mass during the critical high temperature stage of composting. Though enclosed, these systems use aerobic composting through the use of forced air circulation or mechanical stirring.

Bedminster Bioconversion Corporation and Recomp, Inc. take advantage of the Eweson rotary drum technology to compost MSW, commonly in conjunction with sewage sludge. The Eweson technology uses a long drum (typically 12 feet in diameter by 120 feet long) with three compartments. Waste is maintained in each compartment sequentially for one to two days. The tumbling action within the drum tears open plastic bags and softens

and shears paper products. Temperatures in the first two compartments reach 160 degrees F due to aerobic bacterial action while the third chamber serves to dry the material somewhat through dry air circulation. Material emerging from the third chamber is screened to remove inorganics (20 to 30 percent) and the fines then go to aerobic piles to stabilize. The system can be integrated with front-end processing to remove recyclables and reduce the residue stream.

Riedel Waste Disposal Systems and Waste Processing Coporation are licensed to market the Dano drum technology developed in Switzerland. Minimal preprocessing, such as oversize removal and ferrous separation, prepares the raw wastes for entry into the Dano drum. Once inside, double screens with knives and slow rotation combine to pulverize the moistened waste for 8 to 12 hours. At the drum's tail end, a trommel screen separates the size reduced organics from the intact inorganics. Aerated static piles form the environment for 21 days of composting and 21 days of curing. Post-processing, such as shredding and screening, produce the final product. The inorganic stream can be handpicked for recovery of recyclables prior to landfilling.

Several companies have adopted sludge composting technology to MSW composting. Compost Systems Company has integrated a standard pre-processing line that removes recyclables and undesirables prior to double shredding and in-vessel composting. The vessel utilized can be one of several extablished sludge composting vessels such as a Pagro horizontal bin reactor or a Fairfield circular Digester. Royer Industries, Inc. also adapted their automated sludge composting vessels to MSW composting. Royer can also provide a self-cleaning trommel screen to remove oversize inorganics after composting. Several of these companies have responded to the RFEI issued by the Town in April 1989, and may be willing to respond to a Town project.

7.1.3 Co-Composting

Introduction

As previously discussed in Section 3.3.6, Septage, septage generated within in the Town is processed at the Riverhead Scavenger Waste Plant. There is a possibility that this septage which is co-processed along with

the septage from the Town of Riverhead into a sludge that is currently landfilled could be co-composted with the Town's mixed waste fraction. Since this possibility exists, the following co- composting technology has been evaluated as a means of processing the Town's mixed waste and septage. It is noted however, that the Riverhead plant produces a combined sludge cake, and Southampton is only responsible for a portion of it. Therefore, if this portion is removed by the Town, a special arrangement for measuring, handling and transport would be needed.

Two pressing needs are responsible for the recent resurgence of interest in co-composting. The more attractive features basically are the potentially lower costs, fewer unfavorable impacts upon the environment, as long as the septage is relatively uncontaminated, and the recovery of useful resources. The two needs are for an inexpensive and readily available bulking agent for composting sewage sludge and a method of treating organic refuse other than by landfill or incineration. Composting mixtures of refuse and sludge meets both needs: the organic fraction of refuse can serve as a bulking agent, and simultaneously both materials are treated.

Development of Co-Composting

Co-composting refuse and sludge is as old as composting municipal refuse alone. The "old" (pre-1975) and the "modern" (1975 to the present time) approaches primarily differ in their emphasis. Originally, the emphasis was on the refuse fraction, and the sludge was regarded principally as a source of nitrogen and phosphorous, and to a lesser extent, of potassium for enriching the refuse. A seriously limiting factor before 1975 was the high moisture content of the sludge. At that time the technology of sludge dewatering was in its developmental stage and therefore the sludge underwent very little dewatering before being added to the refuse.

Co-composting systems in use before 1975 were the same versions of those currently available. Therefore, both forced aeration and turned windrow systems were used, as were several proprietary reactors.

One of the earliest reports on forced aeration of refuse deals with an operation in the Philippines. In 1959, the City of Manila, assisted by the World Health Organization, designed and built a 10 ton/day pilot

plant to compost the organic fraction of refuse by the forced aeration method. The facility was located at a waste disposal site on the Island of Balut.

From the results obtained in the operation of the plant, it was concluded that forced aeration could be successfully used to compost the organic fraction of municipal solid wastes in the Philippines.

Period of Decline

The early interest and activity in co-composting was followed by a relatively sharp decline, despite the fact that it had been demonstrated as being technologically feasible. The decline began in the late 1960s and continued throughout the 1970s. The decline was strictly due to the loss of interest in composting municipal solid wastes and in resource recovery in general. Consequently, the factors that were responsible for the decline in composting also contributed to the decline of interest in co-composting. Some of the contributing factors included the disastrous financial outcomes of early ventures and the consequent discouragement of many potential users.

The absence of a market large enough to accommodate the output of composting operations effectively stopped the adoption of composting as a means of disposing of the organic fraction of MSW. The lack of a market, combined with the costs of processing and composting the wastes, rendered the economics of MSW disposal overwhelmingly in favor of landfill. This, combined with the fact that sufficient land was available for landfilling, made the decline of composting and of co-composting inevitable.

Current Status

The situation described in the previous section has now changed. The scarcity of land and the awareness of environmental and public health concerns caused by unregulated land disposal of solid wastes together with the removal of the economic advantages has resulted in a resurgence of interest in co-composting. However, the spread of sewage sludge composting is still hampered by the need for an easily available and reasonably priced bulking agent. Up until recently, wood chips were the most common materials for a bulking agent, but they are becoming difficult to obtain and consequently, more and more expensive. Therefore, other

bulking materials are being sought. Consequently, it is not surprising that the potential of using the organic fraction of MSW as a bulking agent for sewage sludge composting is becoming increasingly attractive.

Steps and Problems in Co-Composting

With the exception of making provisions for adding and mixing sewage sludge, the steps in co-composting, regardless of compost method used, are the same as for composting refuse alone, except that provisions to handle the sludge in such a way that odor problems do not arise is very important. The overall process is as follows: collect the refuse and segregate the organic matter in the refuse, mix the refuse with the sludge, compost the mixture, and prepare the product for storage and post process the final product to market specifications. The following paragraphs describe certain aspects of co-composting and some of the requirements that have to be met.

Sludge Characteristics - Sludge or septage processing is not discussed in this report because the sludge usually is processed at the wastewater treatment facility and is delivered to the compost facility ready to be used. In this case the Town would have to provide for this transportation from Riverhead. The main requirement in terms of the compost process is a thorough knowledge of the physical, chemical, and biological characteristics of the material (e.g., organic content, moisture content, C/N ratio, P content). These characteristics have a major impact on the suitability of methods and equipment selected to handle and process the sludge.

Mixing Refuse and Sludge - Mixing involves two very important considerations, namely, 1) the proper ratio of sludge to refuse; and 2) the act of mixing the two wastes to form a homogeneous mixture. Many factors enter into a determination of a proper or suitable ratio. If the disposal of the sludge and refuse is of equal concern, the ratio should be such that the relative generation rates of both wastes would be matched. Fortunately, varying ratios can be used with equal success by adjusting the moisture contents of the constituents, and ensuring that the C/N ratio of the mixture is at a permissible level.

A thorough mixing of refuse with sludge is essential to the success of a co-compost operation. This is one of the more important tasks to

accomplish. Ideally, the mixture should be completely homogeneous, and yet be porous. Furthermore, this porosity should be maintained throughout the duration of the composting process. The difficulty is that a mixture of refuse and sludge has an innate tendency to settle. The tendency is not surprising in view of the fact that refuse in the U.S. contains a high concentration of paper.

The utilization of raw sludge, septage, or digested sludge as a supplementary compost feedstock has the potential attendent problem of odor. Particularly in the case of raw sludge and septage, odor emissions can be subatantial unless properly controlled. The problem of odor is somewhat less in the case of digested sludge inasmuch as it has been subjected to greater treatment than sludge or septage. Consequently, digested or stabilized sludges are more desirable than raw sludge or septage as a cocompost feedstock with respect to potential odor problems. Additionally, stabilized sludges represent substantially less health risk to operating personnel at the composting facility. The Riverhead septage is digested and should not present a problem.

Compost Step and Product Preparation - Since the equipment and processing involved in the composting and product preparation steps are the same as those used in the composting of refuse alone, no further consideration is given them in this section.

The Product

If the entire operation has been properly conducted, the product will have all of the well known qualities attributed to a good compost. However, this statement must be qualified. Unless adequate measures are taken, the product will be contaminated by the presence of glass and plastic particles from the refuse contribution and by heavy metals and toxic organics from the sludge. These are important considerations that must be carefully evaluated for any proposed system.

7.1.4 Waste Distillation

According to information provided by the vendor, the Waste Distillation mixed waste processing system involves the destructive distillation of solid waste in the presence of heat and in the absence, or near absence, of stoichiometric oxygen. Distillation, by denfinition, is a

process that consists of driving gas or vapor from liquids or solids by heating and condensing to liquid products especially for purification, fractionation, or the formation of new substances. Since there no condensing of vapors, Waste Distillation is not a true distillation process. Pyrolysis, on the other hand, brings about a chemical change by the addition of heat. The Waste Distillation technology has been compared to pyrolysis techlologies and it exhibits many similar characteristics. It should be noted that numerous pyrolysis processes were constructed during the 1970's, all of which were shut down as a result of technical and operational problems. Instead of comparing Waste Distillation with pyrolysis systems, it is review herein on its own merits.

For the Waste Distillation system the incoming waste is ideally decomposed (distilled or pyrolyzed) into gaseous and solid waste products. The gas from the chemical reaction contains methane, carbon monoxide and water. The remaining residue is usually a mixture of solid char containing minerals, ash, tars, and other inorganics. Note that these are idealized reaction products and, in reality, the incoming solid waste is very nonhomogeneous, resulting in more varied reaction products. The actual quantity and quality of the end products depend on several primary operating parameters such as the characteristics of the incoming solid waste, reaction temperature, reactor vessel pressure, and the amount of oxygen within the vessel.

While no full scale facilities have been built nor are any proposed in an advanced stage of development to our knowledge, the basic elements of this batch processing system is illustrated in Figure 7-4. The raw solid waste is received at the tipping area where large, bulky items such as engine blocks and tree stumps are removed for separate disposal. Removal of inerts and other contaminants is important since these items can lower the energy content of the waste, cause slagging problems in the reactor, and cause mechanical problems within the system. After the waste has been preprocessed to remove these materials, the waste enters a shear type shredder and passes through a magnetic separator where a certain amount of ferrous material can be extracted. The waste is shredded again in order to reduce the particles to a uniform size before entering the feedstock pit.

The waste is removed from the feedstock pit via a hydraulic crane and is conveyed through a drying system which utilizes heat generated from the hot gases exiting the waste distillation chamber. The dried waste is discharged into a waste storage bin prior to being loaded into the feed ram. The waste is then fed into the chamber by the hydraulic feed ram. It is important that the feed ram compresses the waste into a semi-solid plug so that an air tight seal is formed at the entrance to the chamber.

The waste distillation system includes both a preheat and main operating area. The preheat system which is used mainly for start-up requirement is fueled by either natural or propane gas or fuel oil. The main operating chamber is initially preheated to 1200°F by the preheat system and burns the gas generated in the waste distillation chamber.

After the waste is fed into the main operating chamber, the destructive distillation process begins to occur in the high temperature, oxygen-free condition in the chamber. The waste continues to decompose as it moves through the slowly rotating chamber towards the discharging section of the system. The average residence of the waste in the chamber is approximately 15 minutes. The waste is thermally and chemically decomposed as it is heated in the oxygen-free atmosphere of the chamber. The waste decomposes into hot flue gases and char residue.

Although no direct combustion occurs within the waste distillation chamber, the hot gases produced which are not for internal system uses are burned (incinerated) in some type of furnace/boiler arrangement and the resulting steam is used to make electrical energy. The waste distillation system is equipped with steam turbine(s) and electric generator(s) which provide electricity to the facility and possibly a local energy customer.

The hot flue gases generated from the destructive distillation process contain vaporized tars, oils, water, and suspended char residue. Since particulate matter and other combustion products are emitted as a result of this process, air pollution control equipment is required in order to meet all federal, state and local standards regarding air emissions. Since Waste Distillation involves combustion of the resulting gases, it will likely be subject to the requirements of the recently revised air permit regulations (6 NYCRR Part 219) for incinerators.

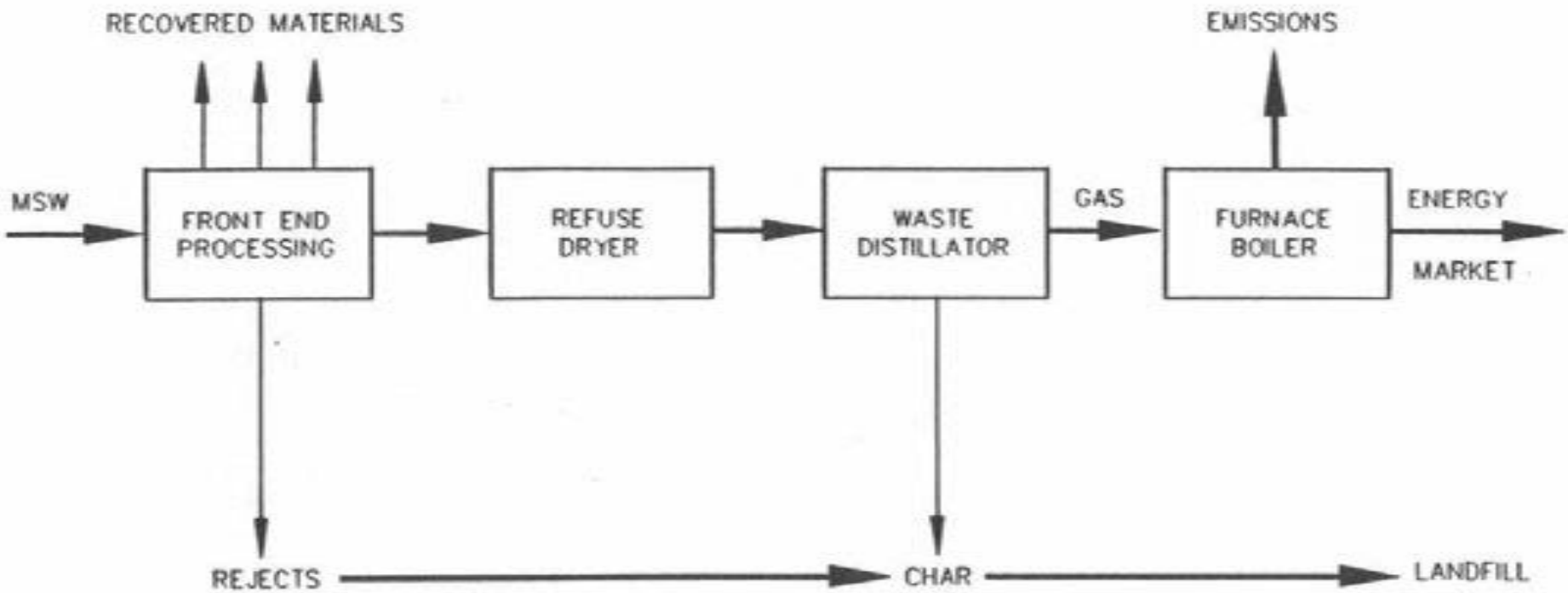

TOWN OF SOUTHAMPTON
SOLID WASTE ACTION
MANAGEMENT PLAN

WASTE DISTILLATION PROCESS

FIGURE 7-4

Controls for particulate, acid gases, and criteria pollutants will be necessary. The waste distillation system is being marketed with a supersonic free-jet scrubber system to control emissions. Due to the lack of operating data, it is uncertain if this scrubber system could meer the Part 219 regulations.

The remaining residual waste consists of glass, metals, other inorganics, and carbon char residue. The residual waste constituents apprroximately 25 percent (dry weight basis) of the original processed solid waste input. Residues resulting from combustion systems typically exhibit many of the same constituents of the incoming waste, but is a more concentrated form. It is likely that the resulting char would exhibit similar characteristics. There have been no successful secondary uses of this carbon char material due to the presence of many impurities and any use of the char residue as a waste water filtration material is completely unproven at this time.

This technology was founded by Waste Distillation Technology, Inc. of Irvington-on-Hudson, NY and has only been used in a 50-TPD solid waste pilot plant at the Marcal Paper Co. in Elmwood Park, NJ. This unit was operated intermittently as a pilot plant between 1984 and 1985. The only Waste Distillation facility that is operational is located in Upland, CA. This facility only processes approximately 12 tpd which is much less than what is required for the Town's waste stream. Due to the extremely brief operational history of the waste distillation technology at the Marcal Paper Company and the lack of operating experience at a facility comparable in size to that required for the Town, it is difficult to draw conclusions regarding long-term cost effectiveness or environmental concerns, and this system is not recommended for further consideration.

7.1.5 Waste-to-Energy

Waste-to-energy systems are available in a variety of configurations and specific technologies for mixed waste processing systems and represent technologies in which solid waste is combusted to recover the heat energy contained therein. Waste-to-energy solid waste disposal technologies can be generally grouped into the mass burning and refuse-derived fuel (RDF) firing systems.

Mass Burning Systems

Mass burn technologies are the oldest and most widely demonstrated of the available mixed waste processing systems with thermal recovery. They have been proven as effective methods for burning waste in both large and small scale operating systems.

In a mass burn system, front-end preprocessing equipment is not necessary, except for the removal of oversized and bulky items from the waste stream, and waste is burned directly as-received. The system must be designed to promote efficient, thorough and consistent burning of nonhomogeneous waste. Metals may be recovered from the resulting ash residue following combustion before the residue is disposed of in a landfill.

Regardless of the mass burn technology, these facilities have certain common operational areas such as the following:

- receiving and storage area
- furnace feeding area
- furnace/boiler area
- steam and electrical generating system
- ash handling system
- air pollution control system

Solid waste is usually delivered to the plant receiving area and dumped through tipping bays into a storage pit. The storage pit is typically sized to hold the amount of waste that the system could process in three days when operating at its installed capacity. The receiving and storage area is enclosed to control dust and debris and to minimize noise and odor emissions from the facility. Waste is either fed by traveling overhead bridge cranes or conveyors into the feed hopper, where the waste is fed into the furnace. Generally, there are three typical furnace arrangements and two typical boiler configurations used in mass burn systems. These configurations are:

Furnace Arrangement

- Grate stoker combustion
- Rotary combustion
- Controlled/starved air combustion

Boiler Configuration

- Waterwall boiler
- Convection boiler

Complete combustion of the solid waste occurs in the furnace and the resulting energy generates steam in the boiler section. This steam can be sold to a nearby steam customer, used to drive a steam turbine-electric generator set to make electricity, or do both (cogeneration). The flue gases exiting from the boiler pass through an air pollution control train which typically consists of an acid gas scrubber to remove acid gases followed by either an electrostatic precipitator or a fabric filter baghouse to removes particulate matter. The resulting bottom ash (from the stoker grate section) and fly ash (from the boiler and air pollution control train) are collected, quenched, and conveyed to a storage area.

The mass burn technology consists of field-erected and modular systems. A field-erected facility generally has a capacity of greater than 200 TPD. This system may include a stoker grate or rotary combustion arrangement with either a waterwall or convection boiler configuration. Currently, there are many vendors actively marketing this technology. Appendix G summarizes some of the major vendors. Some of the U.S. vendors offering this technology have licensing agreements or other arrangements with European or Japanese companies.

According to the 1988-1989 Resource Recovery Yearbook, field- erected systems are the most common type of mass burn facility in the U.S. This technology has been used in Europe and Japan for many years, and its good reliability for disposing of solid waste has made it a common technology for processing waste in the U.S. Many of the U.S. mass burn field-erected systems listed in Appendix G have a demonstrated operational reliability at levels exceeding 80 percent. The required facility size for Southampton may be too small for feasible operation of a field-erected waterwall system. The refractory or convection boiler style would be more suitable.

As a result of the RFEI, Katy-Seghers's response included conceptual plans for a 250-tpd waste-to-energy facility. This preliminary facility design involves a stoker fired refractory wall furnace followed by a convection boiler for heat recovery. There are several operating plants located in the U.S. that have unit size ranges similar to the Town's

requirements, and there are numerous Seghers refractory wall MSW incinerator plants in Europe that are in a comparable size range and such a facility is considered well proven.

Similarly, there are many operating modular facilities with capacities between 20 and 200 TPD. These modular systems are normally designed to process smaller quantities of MSW than field-erected systems, and are usually fabricated at a vendor's plant and delivered to the facility site for final assembly. Modular systems use a starved-air or controlled-air furnace arrangement with either a waterwall or convection boiler configuration.

RDF Firing Systems

Refuse derived fuel (RDF) is a prepared fuel that is derived from the raw solid waste stream. The primary purpose of creating RDF from the solid waste is to make a more homogeneous fuel (containing less inert and non-combustible materials) which provides for greater combustion control. Typical front end processing systems utilize a series of mechanical equipment in a particular configuration to achive RDF. This series of equipment (which can be very similar to that used to produce compost feedstock) can be broken down into the following individual unit operations that results in the production of a fuel that is easy to store, transport and combust:

- Size reduction
- Magnetic separation
- Air classification
- Size separation
- Glass, paper and plastics separation
- Drying
- Densification.

Depending upon the type of front-end preprocessing equipment used, material recovery of ferrous metals, aluminum, glass, and other materials may be accomplished, thus making the resultant RDF a more uniform fuel. The following is a list of potential benefits from processing raw solid waste into RDF:

- Creation of a more homegeneous fuel that decreases combustion air requirements.

- Improved combustion control.

- Higher heat transfer efficiencies between furnace and boiler.
- Recovery of recyclable materials.
- Reduced quantities of ash residue.
- Capability of the RDF to be co-fired with supplemental fuel.
- Improved RDF storage and transportation capabilities.

The major difference between RDF firing and mass burning is that, in the RDF system, the furnace/boiler area is entirely dependent upon the efficiency of the front-end preprocessing. An RDF facility would include a front-end material recovery system and combustion units that are smaller and of considerably different design from mass-burn units. Regardless of the RDF technology, these facilities have certain common operational areas similar to mass burn systems, including:

- receiving and storage area
- furnace feeding area
- furnace/boiler area
- ash handling system
- air pollution control system.

RDF facilities also generate steam for sale or to drive a steam turbine-electric generator set. The various RDF technologies have been organized into the following three separate systems for the purpose of this technology evaluation:

- spreader stoker system
- fluidized bed system
- suspension combustion system.

The prepared RDF fuel for the spreader stoker system requires front-end preprocessing, which may extract metals, glass and other inorganics. From storage, the RDF is fed into the furnace area via screw conveyors, belt feeders, or reciprocating ram feeders. Distributors utilizing air-swept spouts spread the RDF in the furnace area, causing a semi-suspension of the fuel. Combustion air is introduced both above and below the traveling grates.

Energy recovery from the furnace area is accomplished by the use of a waterwall boiler configuration. Air pollution control equipment and

ash handling systems similar to those used in mass burn facilities can be utilized in conjunction with the spreader stoker technology.

A far smaller number of RDF plants are operating at this time, and many have undergone minor and in some cases major retrofits to enable proper operation. Major operating RDF installations include those at the following locations:

- Hartford, CT (2,000 TPD)
- Akron, OH (1,000 TPD)
- Columbus, OH (2,000 TPD)
- Biddeford, ME (700 TPD)
- Niagara Falls, NY (2,000 TPD)

Another very large spreader stoker facility (4,000 TPD) is being started up in Detroit, MI.

Some of the operational problems at various facilities have caused poor reliability and in some cases facility closure. Typical problems have included mechanical failure of preprocessing equipment, fuel feeding problems, and low quality RDF. Nevertheless, this technology is being implemented in some newer facilities. For example, the Biddeford, ME facility which began operating in the fall of 1987 was visited by Malcolm Pirnie in May 1988 and appeared to be operating successfully. The Hartford, CT facility, which has experienced problems such as fires and mechanical failures that delayed full commercial operation of the facility, now appears to be running smoothly.

The only component of the fluidized bed system that differs from the spreader stoker system is the use of a fluidized bed reactor in the combustion area of the process train. The reactor vessel has two primary zones: 1) the bed, which provides mixing and combustion of the air and RDF and 2) the free board, where the particulate matter exits the reactor.

The fluidized bed system is a technology that appears to be emerging from the developmental stage. Information gained from numerous pilot plant projects has helped the fluidized bed system technology. The Northern States Power Company has a 400-TPD fluidized bed facility in LaCrosse, WI. This facility is currently undergoing startup and does not have any operational history yet. The fluidized bed facility in Duluth, MN operated by Western Lake Superior Sanitary District, initially operated intermittently due to various problems (i.e., low-quality RDF, ash

slagging in the cyclones, poor combustion, and excess air emissions), which caused a three-year shutdown in order to make extensive renovations and experienced a three-year shutdown in order to make extensive renovations.

A typical RDF combustion facility utilizing the suspension combustion technology is very similar to the spreader stoker system with only few exceptions. In suspension firing, the RDF is typically mixed with pulverized coal or fuel oil and introduced into the furnace by either horizontal cyclone burners or tangential burners. The fuel particles dry immediately, ignite and burn in a short period of time in the furnace. The conditions necessary for satisfactory combustion in full suspension is much more critical than those for a spreader stoker system. Variations in the quality of the fuel can hamper the efficiency and control of a suspension combustion system.

Projects where full suspension combustion systems have been attempted, used retrofitted electric utility plants which co- fired the RDF with supplemental fuel. Facilities that preprocess the RDF for full suspension combustion do not have a suspension furnace on-site. Instead, the RDF is stored and then transported to a utility-owned furnace and boiler arrangement as a partial replacement for fossil fuels.

Since no domestic suspension combustion facilities have a dedicated furnace/boiler due to the fact that such massive units are limited to electric utilities and large industrial plants, it has not been practical to use this technology as a long-term solid waste processing system.

7.2 ENVIRONMENTAL IMPACTS

This section discusses the generic impacts associated with implementation of a mixed waste processing facility. As discussed in Section 2.2, the Generic Environmental Impact Statement Planning Process, analyzes the environmental effects of a proposed action by dealing with the most significant issues in a broad or conceptual way. More detailed analyses of environmental impacts of the selected technology at the selected site will be presented in a subsequent site and technology specific EIS, which is required by the SEQR process after this GEIS has been approved.

As described in Section 7.1, the technologies under consideration are:

- Front End Processing
- MSW Composting
- Co-Composting
- Waste Distillation
- Waste-to-Energy

This discussion includes consideration of air quality, health effects, water quality, noise, odors, traffic, land use and aesthetic impacts resulting from these technologies. The impacts from the front end processing and waste-to-energy technologies are relatively well defined as a result of years of full-scale operating experience. At this time, solid waste composting in the United States must be considered a developing technology, with a number of systems on the market. However, full-scale operating experience with composting and co-composting technologies in the U.S. is limited. A number of facilities have been started and closed for various reasons including technical, odor economic and marketing problems. The process has been successful with specific organic waste fractions such as sludges, manure, and agricultural or yard waste. However, there is limited experience with the full range of environmental impacts for MSW or co-composting projects in the U.S. at this time. Nevertheless, because of this experience with many other types of wastes, and the European experience, it is possible to predict approximately the impacts that might be expected from this technology. On the other hand, the impacts from the waste distillation technology are less clearly defined since experience with the technology has been limited to small scale pilot studies.

In general, impacts are mitigated through engineering design, the use of state of the art control technologies, best management practices, screening and buffers. Experience has shown that the impacts associated with front end processing and waste-to-energy technologies can be mitigated to levels which do not cause adverse impacts to the environment or to the public. In this regard the NYSDEC has recently published new emissions guidelines and procedures for ash disposal that specifically address and set limits for the compounds of concern. The nature and

extent of mitigating measures to reduce the impacts from the remaining technologies are not as well established.

Some impacts will vary with the Town's seasonal population. For example, impacts such as traffic and noise will be greater during the summer months when the population peaks above the average population for the remainder of the year (see Table 3-6). Increased numbers of people will generate increased quantities of waste and increased solid waste-related activity. Mitigating measures to minimize these fluctuating impacts will also be taken into consideration in the design and operation of the facility. A discussion on present and projected populations for the Town is provided in Section 3.3.1.1.

The potential impacts, possible mitigation measures, unavoidable impacts, commitment of resources, growth-inducing aspects and energy requirements are discussed below.

7.2.1 Potential Environmental Impacts

Environmental impacts are generated as a result of the construction and operation of a solid waste facility. The nature and extent of these impacts will vary depending upon the technologies to be implemented and the site conditions at the selected site. Increasingly strict controls on solid waste facilities serve to minimize the environmental impacts from these facilities. On December 31, 1988, new 6 NYCRR Part 360 regulations became effective for solid waste management facilities. These regulations reduce impacts from such facilities by providing consistent, predictable rules for design, construction, operation, closure, and monitoring of facilities, and by requiring consideration of the entire solid waste management system. The aim is to safeguard the environment and public health by requiring state-of-the-art construction, stringent operation and maintenance standards, increased monitoring, and expanded status reporting on solid waste management facilities. New York's standards are among the strictest in the nation at this time, and the state has taken a lead role in promoting rigorous environmental protection measures.

The following section presents an overview of the impacts that can be expected. More detailed analysis will be provided in a future site and technology specific EIS.

Air Quality

Air emissions resulting from the processing of solid waste materials can include a variety of air pollutants in the form of aerosols, gases and particulates. The specific pollutants and the quantities produced will vary depending upon the specific technology selected, the size and type of system, as well as the engineering design employed. A number of air pollution control technologies are available to reduce emissions to levels that have been determined by the USEPA and NYSDEC to be acceptable.

If a combustion technology is selected, emission and control requirements will be based upon results of detailed site-specific air modeling analyses.

Air quality standards and combustion guidelines have been promulgated by the EPA and NYSDEC in order to protect human health from the effects of air contamination. Air pollution control requirements have become increasingly more stringent. These requirements are implemented by the State through Environmental Conservation Law Article 19 and regulations (6 NYCRR Parts 219 and 231). Typical air pollution control equipment that serve to meet these requirements include wet and dry scrubbers, baghouse, and electrostatic precipitators (ESP).

Emissions can also be expected from the resulting gas of the waste distillation process, which will be combusted to produce energy. The quality and quantity of the emissions along with the effectiveness of air pollution control devices on these emissions are not well understood since there has been no full-scale operational experience with this technology.

Composting systems will also produce some emissions in the form of volatalized products of the organic decomposition process. The major air quality considerations for front end processing and composting facilities include particulates (dust) and odor.

Front End Processing, MSW Composting and Co-Composting - Air emission from front end processing, MSW composting, and co-composting operations are generated during the mechanical processing steps as well as from organic decompostion. The primary emissions include suspended particulates, biological aerosols, and odors. These emissions may be viewed as potentially affecting two different but related environments which

includes the immediate areas within the facility and the community which borders the facility.

A key source of particulate emissions includes size reduction and screening operations. In the case of composting and co-composting operations, particulates can also be generated during the formation of the compost piles and during the mixing of compostable material if the piles are mechanically turned to achieve aeration. Particulates present potential problems since there are a variety of materials commonly found in MSW that can be potentially hazardous if they enter the body.

Control of particulates generated during the handling and processing of waste material is achieved by conducting these operations within a building using a dust collection system at points of dust generation. Employee exposure to particulate emissions, can be eliminated through the use of respirators in areas of high concentration.

Particulate control in composting and co-composting operations can usually be achieved through the application of water to the composting piles. Moistening of the compostable material to about 50 percent moisture content via water addition or application of septage or sludge is required at any rate to maintain optimum conditions for composting.

Biological contaminants can also occur in the air in the form of aerosols. The biological entities in these aerosols can be dispersed through volatilization of material during the composting process or by dust particles which have microorganisms adhering to them. Biological aerosols are particularly evasive because of the unknown numbers of organisms that are required for infective doses and the effects of dispersal of contaminants off site.

Studies have demonstrated that Aspergillus fumigatus, a causitive agent of respiratory infections, has been found at elevated levels in solid waste facilities including composting facilities in which cellulose containing material is used as a bulking agent.

Studies have also demonstrated that elevated levels of airborne total coliforms may be expected, however, organisms isolated were not necessarily pathogenic.

Biological aerosol emissions can be controlled by utilizing filters or a series of filters incorporated in a pneumatic dust collection system

capable of capturing the various airborne contaminants that may escape during material processing.

Production of biological aerosols can be minimized in composting or co-composting by eliminating cellulose containing bulking agents and substituting it with recycled compost. Utilization of suitable masks in selected areas by employees will also minimize workplace exposure to these contaminants.

A formidable problem in composting facilities has been malodorous gases emanating from the raw waste stored on the tipping floor, processed waste, and the composting operation. Severe odor problems have resulted in the closure of some MSW composting facilities. Odors are generated primarily from: 1) freshly prepared compostable feedstocks, 2) any anaerobic areas within the composting mixture or storage areas, and 3) the raw septage or sludge feedstock, if co-composting is employed.

Odors can usually be controlled by careful monitoring of the composting operation and adequate aeration of the composting material. Odors can also be mitigated by conducting preprocessing operations in an enclosed area using odor control technology, although the technology has not been applied in the U.S. to MSW composting operations. The lack of historical experience is compounded by the relatively high cost of odor control systems. An exception is compost filters which are relatively inexpensive, but have an uncertain history in terms of satisfactorily controlling odors.

Good maintenance and cleaning practices in and around the facility are also important odor control measures that should be conducted on a regular basis.

Combustion Processes - Air emissions from a waste-to-energy (WTE) technology facility are caused by the combustion of solid waste; while air emissions from a waste distillation facility are caused by the combustion of the gas produced by this facility. The exhaust flue gas typically contains such air pollutants as particulate matter, sulfur dioxide (SO_2), acid gases, nitrogen oxides (NOx), carbon monoxide (CO) and volatile organic compounds (VOCs). Therefore, these facilities are required to comply with USEPA and NYSDEC air pollution regulations and guidelines to reduce the impacts to acceptable levels based upon health

risk limits. Through utilization of available air pollution control technologies (acid gas scrubbers, electrostatic precipitators or fabric filter baghouses) and monitoring and adjusting the combustion process, operating facilities have demonstrated the ability to meet or exceed regulatory levels of pollutant removal and emission standards.

For control of particulate matter emissions, fabric filter baghouses demonstrate an excellent collection efficiency. It can be further enhanced when used in conjunction with an acid gas scrubber. Electrostatic precipitators, although less efficient than a baghouse at removing smaller size particulate matter, have a long operational history demonstrative of their reliability and particulate removal efficiency.

Dioxins are thermally stable up to about 700°C (1,292°F). Rapid decomposition to carbon dioxide, water, hydrogen chloride and chlorine occurs at 800°C (1,472°F). At 1,472°F, virtually complete decomposition has been shown to occur in 21 seconds (Duckett, 1981). The combustion rate is expected to double for every 10°C (18°F) increase in the temperature in the combustion zone (Browning-Ferris, 1983). Combustion units are generally designed to operate at 1,800°F, and will therefore have minimum dioxin emissions.

The generation and emission of dioxins and other organic compounds and the emissions of trace metals are concerns that have been raised by many public interest groups and opponents of waste to energy projects. Investigations have shown that efficient combustion processes with sufficient flue gas residence times at high temperatures and operation of state-of-the-art control technology minimize emissions of these toxic compounds. Health risk assessments reviewed and approved by the NYS Department of Health that model the worst case exposure from such facilities have found that these emissions (within specific NYSDEC required guidelines) are sufficiently small and are not likely to pose an unacceptable health risk to the public.

Approximately 20 to 30 percent of the dioxins present in stack emissions are bound to fly ash. The remaining 70 to 80 percent are in the gaseous phase (Hutzinger, 1985). The dioxins present on fly ash are relatively easy to remove from the emissions using fabric filters or

electrostatic precipitators. Scrubbers may be used to remove dioxins that are present in the gaseous phase.

Sulfur dioxide and acid gas emissions occur from the combustion of sulfur-, chlorine- and fluorine-bearing constituents in the solid waste. Wet and dry scrubbers have been utilized to reduce SO_2 and acid gas emissions from waste to energy facilities. A dry scrubber is located prior to particulate removal while a wet scrubber is usually located after an ESP. In addition to flue gas control devices, implementation of an aggressive source separation and recycling program, for example the separation of plastic and paper products, has the potential for reducing the level of sulfur, chlorine and fluorine in the solid waste stream. Furthermore, many programs are targeting removal of batteries and other potentially toxic materials to further reduce emissions.

The formation of NOx compounds is inherent to all combustion reactions using air as the source of oxygen. Control of NOx emissions can be accomplished through proper design and operation of the waste-to-energy technology. Lower operating temperatures and shorter residence times have been shown to significantly reduce the formation of NOx compounds. However, modern waste-to-energy technology requires high temperatures and sufficient residence time to ensure complete combustion of the VOCs in the waste. Therefore, waste-to-energy technology facilities operate to control NOx output while reducing VOCs at the same time by adjusting combustion parameters such as lower excess air, using a staged combustion approach and installing flue gas NOx removal equipment such as selective non-catalytic reduction or selective catalytic reduction.

The formation of carbon monoxide (CO) instead of carbon dioxide (CO_2) during any combustion process indicates that the combustion process has not gone to completion. Incomplete combustion also causes the volatilization of unreacted organic compounds (VOCs) into the flue gas. Combustion of solid waste can pose special combustion considerations due to the heterogeneous nature of the material and its ability to undergo characteristic composition changes on a seasonal and even weekly basis.

Currently, emissions of CO and VOCs can be maintained within regulatory guidelines by addressing proper design and operational issues

of the waste-to-energy technology, such as number and location of overfire air nozzles, combustion temperature, and excess air requirements.

Limited data are available on the composition and concentrations of air emissions from a waste distillation facility. However, the applicability of this data is questionable because the limits of detection of the monitoring equipment used during testing were not as sensitive as the usual industry tests for the detection of dioxins and furans. Further data are not available because there are no full-scale facilities currently in operation that utilize the waste distillation technology. Emissions from the combustion of gas produced by such a facility can be expected to be similar to the emissions from other combustion facilities that utilize state of the art technologies. However, data on the composition of the gas is limited. The quality and quantity of the impurities that may be present in the gas are not clearly defined. Consequently, mitigation measures to control emissions are also not clearly defined.

Health Effects

Potential human health hazards associated with various solid waste management technologies including front end processing, MSW composting, co-composting, waste distillation, and waste-to-energy facilities are summarized. Health hazards commonly identified with the disposal of solid waste may generally stem from the potential for odors, dust and chemical or contamination leaching from a composting facility with potential for nuisance effects, contamination of ground water, product or surface water, or the emission of gaseous or particulate contaminants from waste-to-energy or other waste destruction technologies. These issues would be developed in detail and evaluated in subsequent site and technology specific environmental impact studies. While potential hazards are identified, state-of-the art engineering designs, air pollution controls and operational practices would be employed in the selected technologies to minimize the release and transport of contaminants in the environment, the potential for human exposure, and the potential for adverse human health effects.

Front end processing is a waste separation and recovery process that should not pose health hazards to the general public if it is well run, although odors could be emitted.

MSW composting as well as co-composting MSW with sludge or septage should not pose health hazards to the general public. The potential for fugitive release of pathogenic organisms contained in MSW or sludge, including bacteria, parasites, viruses and fungi, would be evaluated however. The intended end use of the composted product would also be evaluated in the context of public health risk and the specific time/temperature and metal content requirements of the Part 360 regulations. Destruction of pathogenic organisms in MSW and raw or digested sludge or septage, as well as the chemical content, must be acceptable for the intended end use (e.g., vegetable production, landscaping, etc.).

Contaminants released in stack emissions from combustion or other waste destruction technologies would be evaluated for the potential for human exposure. The dispersion of contaminants released into the atmosphere and the potential deposition of contaminants to the ground surface would be evaluated, as would the potential transport of contaminants in environmental media and terrestrial and aquatic food chains. The potential for human exposure from inhalation and non- inhalation pathways would be evaluated, and estimates made of the potential for any adverse health effects. Many predictive studies have been conducted to evaluate the potential health risks associated with exposure to contaminants in stack emissions from waste-to-energy facilities. Studies to date have indicated that modern, well designed and operated waste-to-energy facilities pose little threat to public health, although, elements of the public and professional community have not always agreed with this conclusion. The health risks associated with lifetime exposure to contaminant emissions from such facilities are in any event very small and generally less than risks associated with routine exposure to contaminants in the ambient environment and risks associated with routine, commonplace activities.

Fugitive Dust

Fugitive dust is generated during the delivery and processing of solid waste materials as well as in the handling of the resulting by-

products. These by-products can include ash, char or compost depending upon the solid waste treatment technologies selected. Engineering design and best management practices will reduce the impacts of fugitive dust emissions to insignificant levels.

Generation of suspended particulate matter can occur at the following sources: 1) tipping floor where vehicle unloading and loading of waste into the system occurs; 2) processing operations such as size reduction and screening, or furnace charging 3) mixing operations for compost aeration, curing or storage and 4) loadout areas for recovered materials, including ferrous and compost, and for process residues.

Control of fugitive particulates is achieved via several means, including pneumatic dust control systems, moistening of dry material, adequate shrouding and containment devices at conveyor transition points and material discharge locations, and enclosing areas where fugitive particulate matter will be generated from processing operations.

Dust generation at the receiving floor and furnace charging areas can be minimized by maintaining a negative pressure in those areas to prevent migration of particulates out of the facility.

Water Supply

Water is used for sanitary, process, fire control and cleanup needs. It is estimated that water requirements would vary between 10 and 40 gpm, depending upon the types of technology selected and the design of the facility. Water may be supplied by private wells or by public water supply. Water needs can be minimized by utilizing a number of engineering design recycling techniques and the use of best management practices. If the existing landfill site is the site selected for the mixed waste processing system, sufficient water would be available from the public water supply system serving the area.

Front End Processing, MSW Composting and Co-Composting - The composting of compostable materials derived from mixed solid waste requires substantial quantities of water. Water is required to raise the moisture content from a typical level of approximately 30 percent to a moisture content of about 50 percent for the composting mass. This level of moisture is generally considered optimum for composting of MSW. It is estimated that the water requirement during the peak season would be

13,000 gal/day or 9 gpm, and during the winter season would be 6,500 gal/day or 4.5 gpm.

The water utilized for this purpose is not required to be from a potable supply but can be contributed by septage or sludge. Depending upon the moisture content of the septage, or sludge, and their available quantities an additional source of water may also be required for MSW composting.

Combustion Process - A small quantity of water is required during the operation of a waste to energy facility for process needs and sanitary requirements. The quantity of process water required is dependent upon the specific technologies utilized. However, water supply requirements can be minimized through engineering design such as incorporating maximum recycle techniques and use of air-cooled instead of water cooled condensers. Water consumption data for a waste distillation facility are unknown. However, the Hydro-Sonic scrubber system does require the use of water.

Wastewater Disposal and Leachate from Residual Wastes

Waste water sources include sanitary, wash down, fire control, and process water. The actual quality and quantity of wastewater generated will vary depending upon the particular technologies selected. It is estimated that sanitary wastewater will be generated by approximately 10 to 20 employees at the mixed waste process facility.

There are several wastewater discharge options. These include use of an on-site septic or treatment system and/or pretreatment with trucking for off-site disposal. There are no sewage treatment facilities located within the Town. Septic systems are routinely utilized in the Town with no reports of implementation problems (SCDH, 1989).

If the existing landfill site is the selected site for the mixed waste processing system, then the potential exists for utilizing new or expanded landfill cells and the leachate treatment and disposal system currently under construction for residue and disposal of sanitary and process wastewaters.

Front End Processing, MSW Composting and Co-Composting - Other than treatment and/or disposal of washdown water and of water used for fire control, front end processing and composting operations require no water

disposal capacity if the operations are protected from rain and snow and the operations are conducted on an impervious surface. If any water in the form of leachate is generated from the composting operations, it can be collected and injected back into the composting mass.

If the composting operation is exposed to rain or snow, water and leachate collection and treatment systems must be employed in order to prevent pollution of the surrounding site.

Leachates from compost or rejects produced in the compost process are likely to be similar to, but weaker than leachate from ordinary garbage. There should be no problems associated with disposal in the Town's new Cell 3 or similarly designed new cells.

Combustion Process - Waste to energy facilities can be designed for zero discharge of process wastewater, therefore the potential for ground and surface water impacts is negligable. Wastewater quality and quantities generated by the waste distillation process are unknown.

For both types of facilities, sanitary requirements are limited to washroom and lavatory needs and are not expected to have a significant impact on existing conditions. Process, wastewater (if any) and sanitary wastewater will be discharged according to state regulations to prevent adverse impacts on the surrounding environment.

Stormwater runoff is influenced by annual weather conditions and the amount of impervious surface included in facility design. Runoff can be readily controlled by incorporating proper sediment erosion controls and outflow design to a holding or retention area before discharging to surface or ground water. Runoff should be directed away from any solid waste to prevent potential problems such as the leaching of contaminants into the runoff.

Leachates from ash associated with combustion of MSW have been studied extensively in the past few years, because of concern that toxics may be capable of leaching from this material. The NYSDEC has established extensive testing requirements for ash and its disposal is permitted in lined landfills under these regulations. Testing at numerous facilities of the latest designs by EPA and several State agencies have shown that this ash is not a hazardous material and may be so disposed. Neverthe-

less, there is considerable unofficial concern about this issue and many people have been reluctant to conclude that ash is not hazardous.

Based upon the conclusions of the DEC and the State Health Department and the considerable protecton provided by the new double composite landfill liner systems, there does not appear to be any substantial impact associated with ash properly tested and disposed.

Noise

Noise may be generated by a mixed waste processing facility during both construction and operation. Noise sources include mobile vehicles, both on-site and off-site, and mechanical equipment. The impact of this noise is dependent upon a number of factors including the proximity and sensitivity of receptors, the presence of vegetation and berms that may reduce the noise, the use of enclosed facilities, and the current level of ambient noise. An evaluation of potential noise impacts would be made in a subsequent document based upon the specific site and technology selected.

During the construction of a facility, noise would be generated from multiple sources including heavy equipment and vehicular traffic. Generally, noise levels generated during the ground clearing and excavation phases of construction are highest, foundation placement and erection phases somewhat quieter, and the finishing phases again producing higher noise levels. Noise levels from construction activities can range from 94 to 96 dB(A) at a distance of 50 feet from the combined noise sources.

Facility operations will generate noise from equipment sources such as fans, turbines, hydraulic systems, conveyors and the boiler for a waste-to-energy or distillation facility. Since these activities are conducted within an enclosed building structure, the noise levels can be reduced through the use of vibration controls and attenuation devices and are usually quite low outside of these enclosures. The volume of vehicular traffic associated with the mixed waste processing facility will be similar to the volume currently going to the landfill. Therefore, no overall increase in noise levels is expected except that associated with future growth.

Windrow composting operations generate noise during the mechanical

turning of the piles. Diesel powered wheel loaders or special mechanical turners are usually employed for this purpose with the attendant noise levels. Static pile composting generates noise from the pneumatic blowers. The uncontrolled noise levels are generally low. In the case of large compost production operations where large blowers are employed, silencers can be utilized to mitigate noise.

Odors, Vectors, Litter

Nuisance impacts are associated with virtually all solid waste management activities; the degree of impacts (e.g., odors) are technology and site specific. Engineering and operational controls, however, will minimize these impacts on the public. This section identifies the potential impacts associated with construction and operation of front end processing, composting, and combustion technologies.

Odors and vectors originating from construction operations would not be noticeable since the materials used are not putrescible organic materials. Any litter generated by construction would be controlled by good housekeeping practices. Nuisance impacts associated with the processing facilities are discussed below.

Front End Processing, MSW Composting and Co-Composting - Odors are generated within front end processing operations from several areas. One area is the tipping floor where raw MSW is stored and handled by wheel loaders. Odors of raw waste are generated within the tipping floor area. The odors may be somewhat contained by enclosing the tipping floor area and by processing the raw waste as soon as possible after its arrival. The odor of processed waste can be mitigated by enclosing the processing system.

Odors are generated from the composting operation. Malodorous gases are generated if aerobic conditions are not maintained in the composting mass. Consequently, adequate process monitoring and aeration are required to mitigate the production of foul (i.e., anaerobic) odors.

The use of septage or sludge as a supplementary compost feedstock also contributes to emission of odors from the process system. The liquid wastes are characteristically anaerobic upon arrival at the facility and

malodorous gaseous emissions will persist if not controlled, or until oxidized during composting.

Various types of systems are potentially available for odor control. However, there is little proven operating record for such systems in MSW composting facilities. In addition to their somewhat limited effectiveness, the systems are also relatively expensive in terms of percentage of cost of the processing facility. It is important to note that there is a direct relationship at this point between the potential desire to enclose composting facilities, and the cost and maintenance problems associated with the enclosure and odor control system if this is done. Ideally, the volatalized products of microbial decomposition from composting (mostly CO_2 and H_2O) are simply allowed to dispense in the atmosphere, and a provision for their release must be made. However, if they contain odors, an enclosure must be considered. This is a major issue that will directly affect the cost of any proposed system.

Front end processing and composting operations have historically posed some problems in terms of vectors. There are two primary areas for vector activity: the solid waste and compost storage areas, and the composting operation area. Vector control in the storage area can be readily accomplished with a quick turnaround of the solid waste supply, design considerations, such as concrete walls to prevent penetration by vectors, and housekeeping measures, such as keeping garage doors to the tipping floor area closed during periods when the solid waste is not being delivered.

The use of open or unconfined piles of stabilizing compost have attracted vectors. However, this problem can be minimized by proper design and operation of the compost system. Enclosing the operation or periodic turning of open compost piles can help prevent breeding in the compost operation areas.

It is expected that any potential vector problems within the waste storage and composting areas would not be noticeable at off-site locations if facilities are designed and operated properly.

Facilities processing solid waste can create litter if not properly maintained. The design and operation of the facility would promote good housekeeping practices, such as promptly covering or processing the solid

waste before it is transported by wind currents and becomes an off-site problem. Enclosure of the facility, especially the tipping floor, can minimize potential impacts due to litter. Additionally, vehicles transporting solid waste to the Landfill would be appropriately covered to prevent blowing paper and litter.

Combustion Process - Refuse delivered to a facility would be unloaded and stored within the facility in an enclosed area under negative pressure. This creates a slight vacuum which causes any odors to be drawn into the furnace with the combustion air where the malodorous compounds can be incinerated. The residue generated by a waste to energy facility or waste distillation process contains very little, if any, putrescible material. Therefore, odors are not expected to create any adverse impacts during the operation of these facilities.

Potential vector and litter impacts can be expected in the waste storage area. These impacts and their control are similar to those discussed in the previous section.

Traffic

Short-term traffic impacts from the construction activities of a solid waste management facility would be minimal. As previously discussed in Section 3.2.1, North Sea Landfill and Transfer Stations, current traffic to the Landfill involves commercial haulers, Town-operated transfer trailers, and self-hauling residents. During the peak season, there are approximately 70 to 90 commercial hauling vehicles (including transfer trailers) and 1,000 to 1,400 self-hauling vehicles entering the landfill on a daily basis. During the off-peak season, the commercial hauling and self-hauling vehicles entering the landfill on a daiy basis fall to about 50 to 70 and 300 to 600, respectively. Depending on site location, the local access roads may experience a slight increase in use during the peak traffic periods for the duration of the construction. The impact of traffic during operations, including both trucking of refuse to the facility as well as the transport of residual materials from the facility, is site specific. The short term traffic impacts for the various technologies are discussed below.

Front End Processing, MSW Composting and Co-Composting - If the front end processing and composting facilities are located at the same site as

the existing landfill, the onsite volume of traffic would be the same as the traffic volume now entering the Landfill. A slight increase in truck traffic would result from the transportation of compost material and recyclables off the site. It is estimated that during the peak summer season 7 truckloads of compost and 9 truckloads of recyclables would be transported offsite each day. Considering that 70-90 trucks enter and leave the Landfill each day during the summer, the impact of these additional 16 trucks would be slight. Total truck volume during the winter season would be reduced below the volume of the summer season. It is estimated that an average of 4 truckloads of compost and 5 truckloads of recyclables would be transported offsite every day during the winter season. Since 50-70 trucks enter and leave the Landfill each day during the winter, the impact of these 9 additional trucks would be slight.

If the facility is located at a separate site from the residual landfill, then a traffic impact analysis would be performed for the chosen site and included in the site specific EIS. In this separate site scenario, the traffic impacts at the residual landfill site would be considerably reduced below current levels, since it would be receiving only residual and bypass waste instead of the entire MSW incoming stream that it currently receives.

Combustion Process - If the combustion facility is located at the same site as the existing landfill the volume of traffic in the near term would be the same as the traffic volume now associated with the existing landfill. The entering waste stream would be comparable, and the residual material would be disposed of on-site at the landfill. If the combustion facility is located at a separate site from the existing landfill, a site specific traffic study would assess the traffic impacts on the area. With this separate site scenario, the traffic impacts at the existing landfill site would be similarly reduced below current levels since it would be receiving only residual ash and by-pass waste instead of the entire MSW incoming stream. It is estimated that only one truckload of residue material would be transported from a waste-to-energy facility to the landfill every day or every other day.

The quantity of residual material from a waste distillation facility is not known. Consequently, the truck traffic associated with the

transport of residual material cannot be estimated although it is believed to be similar to that discussed above.

In the long term, the Town's waste stream is expected to increase (see Section 3.3.1). Traffic impacts can be expected to increase accordingly, and it may be necessary to consider some restrictions on the minimum amount of waste delivered by self-haulers, since they are a larger percentage of the volume.

Land Use and Aesthetics

In order to minimize the aesthetic impacts that such an industrial development may have upon adjacent land use, a minimum size of about 25 acres plus a generous buffer area is required of candidate sites. A 100 foot buffer area around all facility operations is considered desirable regardless of the technology selected. All technologies under review at the present time involve refuse handling and processing along with significant volumes of truck traffic. These types of activities are usually associated with municipal and commercial/industrial operations and would be most consistent with these types of land use. The impacts of each candidate technology upon surrounding land use are expected to be similar since all facility operations will be mostly within an enclosed structure and potential impacts would be minimized to the extent possible. In this respect, a composting system has the potential to have the greatest amount of unenclosed operations, and this needs to be considered carefully as previously discussed.

Although most waste-to-energy and distillation technologies require multi-story facilities and an exhaust stack, such aesthetic impacts can be minimized through creative architectural treatments, buffer zones and landscaping. Every effort will be made to insure that any facility is an attractive and visually pleasing structure. Architectural treatment and landscaping are both very important considerations. The construction of an attractive and well designed facility will be a "good neighbor" and a credit to the community for many years in the future. Moreover, such a project is likely to be the largest public works project ever undertaken by the Town, and it is important that it receive appropriate attention.

Explosions and Fire

Mixed waste processing operations that employ size reduction equipment are susceptible to explosions and fires generated by this type of equipment. Typically, explosions, fires, or both are generated from the size reduction of combustible solids or from combustible gases liberated during size reduction. Sparks, hot particles generated by size reduction, or both serve to ignite the combustible substances. Fire generated within the size reduction equipment may be spread throughout the processing facility by way of the mechanical or pneumatic conveying equipment. Control of fires is generally by way of deluge water systems and, where applicable, by conveying combusting material to storage areas for extinguishing.

Certain types of explosions within size reduction equipment can be controlled by gas inerting systems. Inerting systems can control conflagrations (i. e., explosions whose wave front is sub-sonic), but cannot exercise control over detonations (supersonic wave front).

The damage from explosions caused by size reduction processes can be mitigated by isolating the size reduction equipment from other equipment and from personnel. The isolation can include placing the equipment within a concrete enclosure. Further mitigation is achieved by properly designing and installing an explosion venting system on the size reduction device and by providing for organic vapor detection equipment and inert gas suppression systems.

7.2.2 Mitigating Measures

The following mitigation measures are designed to decrease the severity of environmental impacts that may be associated with the development of a facility. Virtually all of the adverse environmental impacts discussed in Section 7.2.1 can be mitigated to acceptable levels by design, construction, best management practices, screening and buffers, however, they must be carefully addressed in the procurement and design criteria of the facility.

Emissions of fugitive dust during construction would be minimized by the application of water to any areas that may be potential sources of dust. A soil erosion control plan will be developed to reduce the

potential for erosion of sediments on- and off-site during construction activities. Where appropriate, hay bales, silt fences and vegetation will be used to aid in erosion control. Traffic impacts during construction would be short term in nature and can be minimized by careful planning and scheduling.

Mitigating measures will be employed to reduce the severity of the adverse impacts resulting from operation of the facility. These were discussed previously in Section 7.2.1 along with the discussion of the various potential impacts. The mitigating measures are summarized below.

Air Quality

The degree of impact from operation of the facility on existing air quality would be related to the particular technology employed. However, state of the art methods of reducing air emissions would be incorporated into the design of the facility to meet the requirements of applicable regulations. The extent of the mitigating measures for the waste distillation facility are less clearly defined than for the waste-to-energy facility since the impacts are less developed. Fugitive dust emissions would also be controlled by wetting dust producing materials (ash residue, compost), pneumatic dust control systems and maintaining the processing facility under a negative pressure. In this regard the potential need to enclose composting facilities is a major issue that has important cost and environmental concerns.

Water Quality

Short term impacts to water quality may occur as a result of increased runoff and construction of a facility. However, steps would be taken through the development and implementation of a soil erosion and sediment control plan to prevent undue siltation and erosion during facility construction.

Impacts to water quality may occur over the life of the facility due to increased storm water runoff or point source discharges of process wastewater from the facility. These occurrences would be limited through the use of appropriately approved collection, treatment and discharge systems.

Leachates from residue or ash from either type of facility would be completely contained within a double lined landfill cell and would be tested and utilized or hauled to proper treatment.

Noise

Noise generated during construction and operation of a facility would be controlled by using vibration control and attenuation techniques. Mufflers would be utilized on noise producing equipment where appropriate and equipment would be maintained in proper operating condition. Minimization of vehicular traffic on the site would also lessen the potential noise emissions. A buffer will be incorporated in overall site development plans to help reduce the potential for off-site noise impacts.

Traffic

Traffic impacts are site specific and will be evaluated in the subsequent EIS. Roadway and intersection improvements will be considered where mitigation is required for impacts associated with facility operations.

7.2.3 Unavoidable Environmental Impacts

Unavoidable environmental impacts associated with the implementation of mixed waste processing facility would include short term construction impacts, consumption of landfill space for residuals, and the commitment of resources for construction and operation activities. Construction of a facility may create short term impacts such as noise, fugitive dust, and soil erosion. Ash residue or char generated as a byproduct of the incineration process will require ultimate disposal in a permitted landfill facility, and the commitment of landfill space. However, the amount of landfill space required will be much less than that required for the disposal of raw MSW. In addition, state regulations prohibit the disposal of unprocessed MSW on Long Island after 1990. The severity of all other impacts associated with the implementation of a mixed waste processing facility can be mitigated. Measures will be incorporated into the overall construction and operation plan to ensure all potential adverse impacts are mitigated to the greatest degree feasible.

7.2.4 Irreversible and Irretrievable Commitment of Resources

Resources expended during the implementation of a mixed waste processing facility would include land utilized for site development and energy and financial resources utilized during both construction and operation phases of project implementation. In addition, the commitment of a labor force would be required during the construction phase. However, the development of such a facility would also result in the reduction of landfill requirements. The consumption of natural resources could be reduced if energy is produced.

7.2.5 Growth Inducing Aspects

The development of a mixed waste processing facility is not expected to have any growth inducing aspects associated with it. The development of such a project provides an environmentally sound method of solid waste disposal that is a necessary service to the community.

7.2.6 Use and Conservation of Energy

The amount of energy generated and consumed by such a facility is dependent upon the technology selected, the amount of waste available for processing and the costs associated with operation of the facility. A waste-to-energy or waste distillation facility could generate steam and/or electricity. Front end processing would remove recyclable materials thereby conserving energy that would be expended for the production of virgin materials. Implementation of such a project will fulfill the state requirements for the disposal of solid waste. If these requirements are not met, the Town would be forced to dispose of its waste at a permitted facility located outside of the Town's boundaries. The transport of waste to such a facility could require a significant amount of energy and would not represent the most sound method or most economical solution to long-term waste disposal.

7.3 IMPLEMENTATION ISSUES

This section discusses the institutional issues that must be addressed to implement the preferred approach. These issues include the following:

- Materials and energy markets
- Solid waste stream flow control
- Facility procurement
- Financing and funding assistance
- Risk posture
- Reliability and feasibility
- Town solid waste organization
- Intertown agreements
- Collection system
- Transfer station utilization

7.3.1 Materials and Energy Markets

7.3.1.1 Materials Markets

The materials available for recovery from the mixed solid waste are dependent upon the types and amounts previously removed via source separation, and the efficiency of further removal in the processing system.

As discussed in Section 6.8, Materials Marketing, materials must be processed to meet the specifications of the market in order to be saleable. Materials removed from the mixed waste stream will be contaminated and, accordingly, will require more processing than the source separated materials to meet market specifications. In addition, due to the removal of materials from the mixed waste stream, smaller amounts of material will be available. These factors increase the unit cost of processing the materials removed, and should be considered in determining which materials to target for removal through front-end processing of the mixed waste.

7.3.1.2 Compost Market Analysis

A preliminary market analysis for compost derived from the organic fraction of municipal solid waste was conducted in the Long Island region (Suffolk and Nassau Counties). The purpose of the analysis was to identify potential users of solid waste compost, product demand, and competitive pricing requirements. The analysis performed by Cal Recovery

Systems, Inc. (CRS) for this report included consideration of the following:

- characteristics and properties of the recovered end product;
- the types and locations of potential users of the end product;
- the size of the market of potential users; and
- a description and selling prices of competitive products currently used in the marketplace.

The market analysis was predicated upon the availability of a solid waste compost that would meet Class I and Class II specifications cited in the Rules for Solid Waste Compost Facilities as promulgated by the New York State Department of Environmental Conservation, effective December 31, 1988 (see Table 7-3). The use of solid waste compost that meets the Class I designation can be distributed for use on food chain crops and other agricultural and horticultural uses; the main restriction being it may not be used on crops grown for direct human consumption. The application of compost on food crops grown for canning purposes, for example, would meet state regulations. Class II compost, which is distinguished mainly by particle size, must be restricted to use on non-food chain crops.

The specifications of the compost to be produced are shown in Table 7-3, along with the relevant criteria for Class I and Class II compost. The market analysis is based upon a product having the specifications given in the table. In addition to the physical and chemical specifications given in the table, the compost product will have a dark brown color, a granular texture, and an earthy smell.

Approximately 31,000 tons per year of solid waste derived compost may be produced by the proposed facility, although this amount could be less if large amounts of paper and fiber are removed via source separation. (Figure H-3, Appendix H.) Assuming that the leaf and yard waste, MSW, and sludge is co-composted, compost production during the design year (2003) is estimated to range from 57 to 115.0 tons per day for an average of 86.3 tons per day X 365 days = 31,000 tons per year. At a moisture content of 50 to 60 percent, the density of compost derived from municipal solid waste is approximately 700 pounds per cubic yard. Therefore, the

expected annual volume of compost produced is approximately 31,000 tons X 2,000 pounds per ton X 700 pounds per cubic yard = 88,000 cubic yards per year. Based upon the characteristics of the compost product required by state regulations, the material is potentially suitable for use in both agricultural and non-agricultural sectors. Compost material has been demonstrated to be beneficial for a variety of plant materials and serves a number of purposes including:

- Acting as a mulch to aid water retention, inhibit weed growth, and to the organic matter of the soil.
- Acting as a top dressing by improving appearance, inhibiting weed growth, and adding to the organic matter of the soil.

Agricultural Market Analysis

According to the Long Island Farm Bureau, USDA, there are roughly 39,000 acres of land utilized by the agricultural industry in Long Island, the majority located in Suffolk County. The towns of Riverhead, Southold, and Southampton alone comprise 75 percent of the total acreage. Table 7-4 presents the major agricultural commodities by total acreage in Long Island. These include potatoes, nurseries, sod, grain, and cabbage. The total market value of produce sold by Suffolk County farmers exceeded $115 million in 1987, an increase of 25 percent compared to 1982.

A variety of vegetables and fruits is grown in Suffolk County. Potatoes, cabbage, cauliflower, grapes, and sweet corn comprise the largest acreage. All varieties of potatoes, sweet corn, and cabbage are grown for fresh market, according to the Cornell Cooperative Extension Association of Suffolk County. Except for grapes (wine), there is little evidence that the remaining vegetable and fruit crops are grown for other than direct human consumption.

Based on state regulations, the application of solid waste-derived compost on these crops is prohibited. Unless an exception is granted from the New York State Department of Conservation, the main vegetable/fruit crop acceptable to apply compost is grapes, which are primarily grown for wine production.

In addition to the crops mentioned, grain and hay comprised 6,000 acres in 1988. The grain is most likely grown to support the relatively

TABLE 7-3

PROPERTIES OF MATURE COMPOST END PRODUCT[1]

Parameter		Expected[2] As-Produced Analysis	DEC Class I[3] Requirements	DEC Class II[3] Requirements
Particle Size (maximum)		10 mm	10 mm	25 mm
Moisture (wet weight basis)		45%	None	None
Specific Gravity (wet weight basis)		0.75	None	None
C:N Ratio		25:1	None	None
Nitrogen		0.6%	None	None
Phosphorous (as P205)		0.5%	None	None
Potassium (as K20)		0.4%	None	None
Organic Matter[4]		97%	None	None
pH		7.2	None	None
Mercury	(Max)	10 ppm	10 ppm	10 ppm
Cadmium	(Max)	10 ppm	10 ppm	10 ppm
Nickel	(Max)	200 ppm	200 ppm	200 ppm
Lead	(Max)	250 ppm	250 ppm	250 ppm
Chromium (total)	(Max)	1,000 ppm	1,000 ppm	1,000 ppm
Copper	(Max)	1,000 ppm	1,000 ppm	1,000 ppm
Zinc	(Max)	2,500 ppm	2,500 ppm	2,500 ppm
PCBs (total)	(Max)	1 ppm	1 ppm	1 ppm

Notes:
1 Dry weight basis except where noted.
2 For MSW derived compost.
3 Solid Waste Management Facilities, 6 NYCRR, Part 360, New York State Department of Environmental Conservation, Effective December 31, 1988
4 Excludes plastic.

TABLE 7-4

LONG ISLAND AGRICULTURAL INDUSTRY [1]
1988

Commodity	Acres
Potatoes[2]	8,500
Nursery[2]	6,500
Sod[2]	4,500
Grain[2]	6,000
Cabbage[2]	1,700
Sweet Corn	1,400
Grapes[2]	1,300
Cauliflower[2]	1,200
Green Beans	600
Pumpkins	500
Peaches	400
Apples[2]	330
Greenhouses[2]	300
Cucumbers	300
Peppers	300
Spinach	300
Strawberries	300
Tomatoes[2]	250
Lettuce	200
Onions	200
Melons	200
Squash	200
Other Crops	1,000
Other Cropland	2,500
	38,980

Notes:
1 Source: Long Island Farm Bureau, United States Department of Agriculture.
2 Cornell Cooperative Extension, Facts about Suffolk's Agricultural Industry.

small herds of dairy cows (Holstein breed), beef cattle (Black Angus and Whiteface Hereford), and sheep.

Non-Agricultural Market Analysis

Private Sector

Nurseries and greenhouses have become the major horticultural producers for Suffolk County. These nurseries and greenhouses generate roughly one-half of the entire state's horticultural production, a market share of $67.3 million in 1987.

Approximately 300 acres of greenhouses exist in Suffolk County. Both potted plants and cut flowers are grown. Cut flowers include roses, chrysanthemums, and orchids. Potted plants include azaleas, geraniums, poinsettias, lilies, perennials, and foliage plants. Production of these plants varies from year round (i.e., chrysanthemums) to one specific season (i.e., poinsettias), with an estimate of roughly two crops per year. Soil mixtures generally include peat moss and vermiculite.

Approximately 6,500 acres of nursery crops exist in Suffolk County, with the major crops being deciduous shrubs, evergreens, shade and ornamental trees, and container - field grown perennials. Nursery operations range in size from one acre to over 400 acres. Plants are grown both in nursery fields and containers. Growing mediums generally include a coarse building sand, peat moss, and fine shredded bark.

Approximately 4,500 acres of sod are grown in Suffolk County, generating $10 million annually. Sod farms are primarily located in Brookhaven, Riverhead, Southampton, and Huntington. Kentucky bluegrass is the primary sod grown, with an 18-month growing period. Prior to seeding, the soil is plowed, harrowed, limed and fertilized. During harvest, approximately one-half inch of topsoil is lost. Thus, the application of compost to these fields may be very beneficial.

There are approximately 583 landscaping and horticulture businesses in Suffolk County, with an employment of 2,010 persons, according to the Department of Commerce. The majority of these companies are small operations; over 80 percent of these businesses have less than four employees. Eighteen companies employ 20 or more persons.

Landscapers use significant quantities of organic soil amendments. Soil amendments are required for new construction projects (e.g.,

residential housing developments and commerc buildings), and the maintenance of existing landscaping. Material: sed include: topsoil, mulch (bark), compost, and peat. These material: e typically purchased in bulk form, when possible.

Public Sector

Municipalities and other government agencies often require organic soil amendments for use as a soil conditioner or top dressing in parks, recreation areas (such as ballfields and golf courses), landscaping, turf repair, etc. Public agencies which are potential markets for compost in the area include:

Town of Southampton, Highway Department
Town of Southampton, Parks and Recreation
Suffolk County Department of Parks and Recreation

Nassau County Department of Parks and Recreation
New York State Department of Transportation

These agencies were surveyed for their demand of soil amendments. In the Town of Southampton, for example, the Highway Department reported using roughly 3,500 cubic yards per year of topsoil. This material was obtained from a recharge area, thus the major costs were digging and transportation. The Southampton Parks and Recreation Department reported purchasing roughly 300 cubic yards per year of topsoil at a price of $12 per cubic yard.

Suffolk County Department of Parks and Recreation reported an annual purchase of 500 cubic yards of topsoil at a cost of $0 per cubic yard, 600 cubic yards of top dressing mix at $50 per cubic yard, and minimal quantities of peat. Nassau County Department of Parks and Recreation reported the usage of 4,500 cubic yards of compost at a cost of $0 per cubic yard, 200 cubic yards of manure at a cost of $0 per cubic yard, and 67 cubic yards of peat moss at roughly $35 per cubic yard.

The New York State Department of Transportion (NYSDOT) is also a user of topsoil. Topsoil is used for planting and dressing slopes. Specifications include a pH range of 5.5 to 7.6, organic content of between 2% and 20%, and size distribution by weight as follows:

Screen Size	Passing Rate
2 inch	100%
1 inch	85% - 100%
1/4 inch	65% - 100%
200 mesh	20% - 80%

The ability and willingness of public agencies to utilize compost would obviously benefit the marketing for this material. The use of compost by public agencies will depend largely on price, specifications, and procurement procedures by each agency. In addition, markets can be improved if state or local legislation provides a bidding incentive for agencies to purchase compost rather than other soil amendments. A similar program has been developed for the purchase of office paper made from secondary paper. This has greatly improved the purchase and usage of recycled paper in the State of New York.

Competition

Solid waste derived compost would compete against the following resources:

- Topsoil
- Peat
- Yard Waste Compost
- Manure
- Mulch
- Miscellaneous Materials (Grow Mix, Milorganite, Vermiculite)

Of the six resources listed, topsoil and peat are available in substantial quantities and therefore would compete with solid waste- derived compost. Based on a telephone survey by CRS of local nurseries and landscapers, the majority of the peat is imported from out of state, mainly Canada. Peat is sold in plastic-wrapped bales usually ranging in size from four to six cubic feet. Peat is used extensively by the nursery and greenhouse industries in potting mixes, and generally comprises approximately 20 percent to 30 percent by volume of the mixes. Probably the most attractive property of peat moss in horticulture as an ingredient of a potting mix is its substantial moisture holding capacity. In addition, because of its organic substance, peat moss improves soil structure, thereby aiding aeration. Topsoil is primarily derived from areas in Suffolk County. Topsoil is sold both in bulk and bagged forms, and the

price may vary significantly depending on the quality. It is used extensively in the landscaping and nursery industries.

Yard waste compost is available from a variety of municipalities in the region. Yard waste compost may be a source of competition for solid waste-derived compost, especially as municipalities continue to expand their yard waste compost programs.

The wholesale costs of topsoil, peat, and yard waste compost in Long Island are summarized in Table 7-5.

TABLE 7-5

TOWN OF SOUTHAMPTON
WHOLESALE COSTS OF COMPOST

Material	Unit Cost ($ per cubic yard) Minimum	Maximum	Average
Topsoil (screened)	0	22	12 - 15
Peat	23	35	27 - 35
Yard Waste Compost	0	0	0

These figures are based on a CRS telephone survey of nurseries and landscapers in Suffolk County and do not include transportation costs. In addition to the materials mentioned above, the compost may be able to compete with the more expensive specialty soil amendments, such as top dressing mixes used for golf courses. Specifications for the top dressing mixes, as used by the Suffolk County Department of Parks and Recreation, requires particle size in the range of 25 to 50 millimeters (one to two inches) for 80 percent of the medium, and the remaining fraction with a particle size ranging between 11 and 25 millimeters (3/8 to 1 inch). This top dressing mix commands a price of roughly $50 per cubic yard. Competing with this material would obviously depend on the quality of the finished compost.

The majority of the soil amendments are purchased during the spring season with a second sales peak in the fall. Availability of topsoil and peat may fluctuate and are dependent on soil moisture conditions in Long Island and Canada. Heavy precipitation in Canada can produce a shortage of peat for export, as experienced several years ago by larger nurseries,

while similar weather conditions in Suffolk County can interfere with the digging and screening of topsoil, also affecting supplies.

In addition to the materials mentioned above, a large supply of horse manure is available in Suffolk County, which may compete with the marketing of solid waste-derived compost. Horses represent the largest single livestock species in Suffolk County, with numbers around 30,000. Interest in horses, mainly for leisure riding and breeding purposes, seems to be at an "all-time high," according to the Cornell Cooperative Extension. Thus, as the horse population increases in Suffolk County, the quantity of manure that will require disposal will also increase.

The biggest incentive for the agricultural industry to purchase compost is possible cost savings compared to other soil amendments. This was exemplified in the CBNS/CCE compost market survey. Conducted in Long Island, the study indicated that the demand for compost increased by 96 percent as the price decreased from $15 per cubic yard to $10 per cubic yard. A further decrease to $5 per cubic yard resulted in a market increase of 318 percent compared to $15 per cubic yard. Thus, the actual demand for compost will be largely a function of its cost compared to the cost of other soil amendments.

In addition, the CRS, Inc. market survey for this report indicated that many nurseries and landscapers would require the endorsement of the Cornell Cooperative Extension, Suffolk County, prior to using the compost.

Market Demand

Table 7-6 presents an estimate of potential compost demand for Suffolk County. As shown, a potential demand of 1,133,000 cubic yards per year of compost may exist for compost produced, in the Town or from other local supply sources to replace soil amendments now being used. This includes an annual demand of 831,000 by nurseries, 80,000 cubic yards by wine grape growers, 95,000 cubic yards by sod growers, and 28,000 cubic yards by landscape services. It should be noted that very conservative application rates were used for the markets presented.

The quantity of compost which would be produced in the Town represents about 7 percent of the total potential market demand, as presented in Table 7-6. It should be noted that the marketing of compost from the Town would be competing with other composting projects in Suffolk

County, including Islip, East Hampton and Southold at this time, and others in the future.

MSW Compost Marketing Overview

Marketing of compost has historically been one of the key issues of concern since the feasibility of composting largely depends on the ability to sell, or at least give away or find a beneficial use for the compost product. This preliminary compost market analysis indicated a theoretical demand for composted material in and around the Town of Southampton. However, composting is not a soil, but a soil amendment that will undoubtedly require a demonstration period before potential customers accept the material. In the past, marketing MSW compost has been troublesome; in some cases due to the public's negative perception of a product made from garbage. For this reason it is especially important to make compost marketing a high priority concern and to develop a well planned marketing program.

There are several factors that will affect the actual marketability of the composted material. These factors are: the material being composted, the quality of the product, market confidence (a function of the length of time the product has been used) and the channels of market distribution. Before a new compost product can gain market acceptance, it will first have to prove its usefulness. Market penetration may be quite difficult and this market is competitive. Consequently, a well planned market development effort must be a key element of the solid waste management program, to facilitate acceptance and use of the product.

Direct marketing of compost to the end user, the highest paying market segment, while desirable, is not the usual means for marketing a new product. The end user market for compost generally consists of small to mid-sized commercial or retail establishments. These firms tend to be rather conservative relative to the introduction of a new product. Even though some firms may be using a composted material, it is a material that the establishment has worked with before, and knows that the material will not adversely affect their business. Direct marketing of compost must also compete with an existing channel of distribution. The interests that comprise these channels would view any new source of compost as competition. In this light, Southampton would be competing with the East End

TABLE 7-6

POTENTIAL COMPOST MARKETS, NON-FOOD CROPS
SUFFOLK COUNTY, NEW YORK[7]

Market	Acres[1][2]	Annual Potential Application Rate cu yd/acre[3]	Demand (cu yd/yr)
Nurseries	6,200	134	831,000
Wine Grapes	1,200	67	80,000
Greenhouses	290	90[4]	26,000
Sod	4,300	22	95,000
Christmas Tree Farms	95[5]	67	6,000
Grain and Hay	5,700	5	29,000
Subtotal	17,785		1,067,000
Town of Southampton			38,000
Landscape Services[6]			28,000
Total	17,785		1,133,000

Notes:
1 See Table 2.
2 Cornell Cooperative Extension, Facts about Suffolk's Agricultural Industry.
3 CRS, Inc.
4 Nelson, Walter, Cornell Cooperative Extension Service, Chemong County, New York, Personal Communication, June 1989.
5 Based on CRS market survey, May/June 1989.
6 Based on survey results for compost costing $10 per cubic yard. For more details of survey, see Commoner, B. et al., Final Draft, Development and Pilot Test of an Intensive Municipal Solid Waste Recycling System for the Town of East Hampton, Undated.
7 Nassau and Suffolk County data modified to reflect Suffolk County only.

Note: Application rates used are extremely conservative.

Towns along with other towns on Long Island that have leaf and yard composting programs.

The primary issue is not really one of profit or loss, but disposing of the solid waste stream. It is important not to be overly optimistic about markets, particularly with the quantities involved. The Town of Southampton should be in a position to initially give the compost material away. To minimize the marketing risks, the sale of compost should be part of an overall design, build, and operate scenario for a composting system, where the selected vendor is financially capable of guaranteeing and end market for the resultant material. This would minimize the Town's risks for marketing this material.

Composting as a Volume Reduction Strategy

Given some of the potential uncertainty in marketing compost, it is important to review the feasibility or necessity of landfilling portions of the compost should this become necessary. While this strategy is not desirable, principally because it requires the use of considerable valuable landfill volumes and results in negative revenue. Nevertheless, it is our understanding that it would be permissable under Part 360-8.3(d) after December 18, 1990.

Depending on the amount of source separation, the types of compost produced and the ability to extract additional salable recyclables from the process, the compost systems shown in Figures H-1 and H-2 (Appendix H) could result in a net volume reduction range between 40 and 20 percent of incoming total waste. A number of variables associated with compaction and subsequent decomposition in the landfill must be considered to accurately predict final volumes, and these can be more accurately assessed after a specific system is selected. However, it is concluded that landfilling of compost could be available as a back-up alternative should it not be possible to market compost product for limit periods of time.

It is noted that such a strategy should be avoided, and that the total cost of disposal will increase substantially should this be necessary. In essence, this strategy should only be considered as a last resort, and would ultimately depend on the Town's ability to develop substantial additional landfill volume at the North Sea site.

7.3.1.3 Energy Markets

If an energy-producing technology is selected, energy markets will be needed for the electricity produced by a waste-to-energy facility or for the RDF that may be produced. Once the Town has selected an appropriate technology, potential energy markets will be actively pursued.

The Citizens' Advisory Committee on Public Power (CACPP) for the Town has been examining the possibility of implementing a municipal electric district within Southampton. Due to Long Island Power Authority legislation in connection with the takeover of the Shoreham Nuclear Power Plant, the CACPP efforts to implement another means of supplying and distributing electric power to the municipal electric district were discontinued. However, the CACPP suggested that a municipal electric district created by the Town could receive and distribute electricity produced by a waste-to-energy facility to the residents of the Town. Therefore, this proposed municipal electric district is a possible energy market that would need further examination once the Town selects the mixed waste processing technology.

LILCO is another possible customer for electricity generated by a waste-to-energy facility. The Public Utility Regulatory Policies Act (PURPA) of 1978 and the New York Public Service Law (PSL) requires electric utilities, in this case LILCO, to purchase electricity from qualifying facilities. It was expected that the Town could receive payments based on estimated long-run avoided costs for each kilowatt-hour delivered to LILCO. However, LILCO submitted a bidding system plan in the fall of 1988 to the PSC, which was accepted and responded to the Public Service Commission's (PSC) interest in developing a competitive bidding process for future generating capacity. This bidding system allows LILCO to cease negotiations with independent power producers except for those waste-to-energy facilities that would be on line by May 1991. Further, on June 13, 1989, the PSC withdrew its waste-to-energy exemptions and is now awaiting the recommended policy for these facilities from the New York State Energy Office (NYSEO). The two options regarding parallel generation agreements with New York State utilities are that waste-to-energy facilities would be:

- required to participate in the competitive bidding process
- exempt from the bidding process but would receive payments based on the average energy price awarded to the bidders.

Thus, the recommendations of the NYSEO will be an important issue affecting the possible sale of electricity to LILCO and will likely increase the cost of waste-to-energy options by reducing the minimum payments for energy currently enjoyed by operating facilities.

If the NYSEO recommends the competitive bidding process option, there is the possibility that revenues could be reduced to include only the avoided cost if the facility were not successful in the bidding process. Although this is quite unlikely, given projected future energy needs for Long Island, this possibility should be considered, since it would have a substantial effect. Moreover, under a more likely competitive situation, the price could potentially drop to as low as $0.03-0.06 per Kwh, which would result in a $5-10 per ton increase in tipping fees.

Energy markets for RDF could include local industries that require additional and/or auxiliary fuel for their furnace/boiler systems. However, a more detailed examination of possible RDF markets will be considered if such an RDF-producing technology is selected.

7.3.2 Solid Waste Stream Flow Control

An analysis of the annual solid waste stream quantities and characteristics has been discussed in Section 3.3, Solid Waste Quantification and Characterization. This quantitative assessment, however, does not in itself ensure that this available quantity of solid waste will be delivered to a waste disposal facility. The facility owners (Town or vendor) and/or operators must also have some form of control to ensure that the solid waste will indeed be routed to the facility. Without this control of available solid waste to the facility, the risks of owning and operating such a facility increase substantially. The net effect of a scenario in which no solid waste stream control is in place would be that the facility becomes a "merchant" plant competing for the raw solid waste supply with other solid waste disposal facilities and financing such a plant is untenable. Therefore, it is critical to obtain control of the solid waste stream to minimize these risks.

Historically, there have been three prevalent methods of solid waste stream flow control successfully used by waste disposal facilities in the U.S.:

- Legislative methods
- Contractual methods
- Economic methods

If a legislative method of controlling the solid waste stream flow is utilized, a municipal entity such as the Town or any agency that may be empowered in the future to implement solid waste management facilities (e.g. E2RA or a Regional Authority) would direct municipal and/or private haulers to use a specified solid waste disposal facility. This method may require enabling legislation at the state level to allow the Town to exercise legal or regulatory authority via laws and ordinances over the collection, transportation, and ultimate disposal of the solid waste stream flow generated within its jurisdictional boundaries.

The Town currently has an ordinance related to solid waste management activities (see Section 3.3.5, Local Ordinances). However, this ordinance does not specifically direct the waste to designated disposal facilities. The Town may wish to revise this ordinance to direct mixed waste to the appropriate processing facilities as required for implementation of the SWAMP.

More and more municipal governments are considering the use of such ordinances; however, such ordinances must be carefully drafted to consider both the need to secure sufficient solid waste stream supply to a waste disposal facility and the economic need of private haulers and recyclers. The implications of recycling and any legal restrictions to flow control may be important. Accordingly, the Town should consult with its legal counsel in developing such ordinances.

The primary advantage of legislative methods for solid waste stream flow control is that it legally permits the municipal entity to control the flow of solid waste within its jurisdictional boundaries and direct it to a waste disposal facility. In many cases, a combination of legislative and contractual measures are utilized to provide for control of the solid waste stream. Another important advantage is that legislative

methods of solid waste stream flow control can be implemented in conjunction with a municipal source separation and recycling program.

A disadvantage of this approach is the potential for legal challenges to the implementation of an ordinance, special taxing district, or some other source of legislative control of the waste stream. Such legislation must also be drafted such that it supports recycling activities and does not interfere with implementation and operation of recycling programs in the villages.

Historically, one of the simplest methods of controlling the solid waste stream flow is to have the owner of a waste disposal facility contract directly with the private haulers collecting the solid waste or with the municipalities in which the solid waste is generated. A contract includes the initial tipping fee and escalation of the tipping fee throughout the contract term, commitment by the facility owners to accept a specified amount of solid waste and a commitment by the hauler or municipality to deliver a guaranteed waste quantity and to pay the tipping fees regardless of whether the guaranteed tonnage is actually delivered. These provisions control the flow of the waste collected to the facility and provide economic security over the long term.

A typical contract term for this method of solid waste stream flow control is 20 to 25 years and has the potential to guarantee long-term cooperation between the municipalities or the private haulers and the facility owners. This method is unlikely to be useful to Southampton, however, since contracts, with local haulers cannot be backed up to any significant financial guarantee.

Economic methods of controlling the solid waste stream flow involve attracting the solid waste stream flow to a waste disposal facility by setting artificially low tipping fees at the facility. The rationale behind such methods is simply that if the tipping fee charged is set low enough, the economic advantages of decreased cost and higher profit for the private haulers is too great an incentive for them to deliver the solid waste stream to another waste disposal facility. For example, a county-wide landfill facility may charge a tipping fee to the private haulers lower than that charged by present alternative waste disposal facilities such as out-of-county or local landfills. This method of flow

control does not appear to be applicable to the Town's solid waste management system since a regional approach to ~'xed waste disposal is not being utilized.

As the above discussion indicates, there are advantages and disadvantages associated with each of these solid waste stream control methods. A summary of major issues to consider in the process of determining which method(s) will be used to control the solid waste stream is presented in Table 7-7.

Because the Town currently has some ordinances related to flow control of MSW, it is assumed that the legislative method will be utilized. However, it may not be possible to utilize legislative methods for the control of recyclables. Accordingly, as discussed in Section 6.3.1, Mandatory Participation Laws, it may be appropriate to control the flow of recyclables via contractual methods. Solid waste flow control issues are also discussed in Section 7.3.9, Collection System Issues.

7.3.3 Procurement Methods

The purpose of this section is to provide an overview of the procurement methods by which a solid waste disposal facility can be implemented in New York State. A brief review of applicable New York State General Municipal Law regulations for the procurement of solid waste disposal facilities will also be discussed in this section.

There are four primary methods of procuring a solid waste disposal facility:

- Conventional Architect/Engineer
- Turnkey
- Full Service with Private Ownership
- Full Service with Public Ownership

The following subsections will discuss these four methods by which a solid waste disposal facility can be procured.

7.3.3.1 Conventional Architect/Engineer

From a historical perspective, the conventional architect/engineer (A/E) procurement method has been the most common approach to public works projects. A municipal entity, such as the Town or other entity that may be empowered in the future to develop waste management facilities,

TABLE 7-7

SUMMARY OF SOLID WASTE STREAM FLOW CONTROL METHODS

Solid Waste Stream Flow Control	Description	Economic Considerations	Legal Considerations	Other Considerations
Legislative Methods	Waste collectors are required by permit or ordinance to use the facility.	Acceptable security for revenue bonds.	Potential for legal challenges of ordinances.	Removes incentive for facility to compete with other alternatives. Export of waste out of service area can be an issue if less expensive disposal is available.
Contractual Methods	"Put-or-pay" contracts between collectors (municipal and/or private) and (1) implementing municipality or (2) facility operator.	Contracts with private haulers may not provide sufficient security to satisfy the the requirements of financial markets. Contracts with municipalities should be adequate security for revenue bonds.	Local enabling legislation may be required to permit municipalities to enter into long-term disposal contracts.	May involve protracted contract negotiations with numerous municipal and/or private participants. Requires early commitment by implementing municipality regarding costs and timing.
Economic Methods	Service is paid for all or in part by taxes or user fees not charged at the Facility; user charges (tipping fees) are set artificially low or at zero.	Acceptable security for revenue bonds.	None	Imports of waste from outside service area can be an issue.

utilizing this approach procures goods or services by having its consulting engineer or architect design the project, then requesting and receiving formal bids. Award of the contract or purchase order is then made to the lowest bidder. The intent of the A/E approach is both to ensure the lowest cost possible for the municipal entity and also to prevent collusion in the award of the contract or purchase order.

Typically legal constraints on this procurement method permit only very limited exchanges of information and modifications to specifications during the formal bidding process. Accordingly, the contract documents, including drawings and specifications, must be detailed and thorough. Once the contract for construction of a waste disposal facility has been awarded, the facility should be built in accordance with the schedule and for the price provided in the contract. The completed waste disposal facility would be owned by the municipal entity and may be operated either by public sector employees or private sector employees under an operations contract.

The A/E procurement method has been modified as of late by some municipal entities. This modified A/E procurement method seeks bids on the entire solid waste disposal system and facility as one single package, rather than seeking bids on each individual piece of equipment for the waste disposal facility as is done in the conventional A/E procurement method. As an example, for a waste-to-energy disposal facility this modified A/E procurement method is commonly referred to as a "chute-to-stack" procurement. In this modified method, the professional A/E is still responsible for designing the structural and ancillary features. The modified A/E procurement method reduces the number of potential vendors that the municipal entity must interact with, and as a result provides more evenly distributed risk allocation to the lowest bidding contractor awarded the work. This approach can also be employed in procuring recycling facilities and processing equipment.

7.3.3.2 Turnkey

The turnkey procurement method has one contractor responsible for the design, construction, start-up, and acceptance testing of a solid waste disposal facility. Under this procurement method, the turnkey

contractor is responsible for both acquiring the needed equipment for the waste disposal facility and ensuring that the architectural and engineering design work is accomplished. Once the acceptance testing of the facility is successfully completed, the contractor has fulfilled its responsibilities, and responsibility for operation of the waste disposal facility reverts to the municipal entity.

The turnkey procurement method often uses a negotiated contract procedure rather than a formal competitive bidding process as is done in the A/E procurement method. The main advantage of a negotiated contract is that it provides the opportunity for the contractor and the municipal entity to modify and refine the project approach to best suit the needs of the municipality, while addressing the contractor's capabilities. In addition, a negotiated procurement method also allows the municipal consider qualitative aspects with respect to the turnkey contractor such as expertise in scheduling, project management, and cost control.

A negotiated turnkey procurement typically involves a multiple- step Request for Proposals (RFP) solicitation. The first step, the draft RFP, solicits comments from contractors interested in submitting proposals for a solid waste disposal facility and outlines the qualifications that the respondents will have to meet in order to be responsive to the RFP. The second step, the final RFP, is a comprehensive document identifying the specific information to be contained in the vendor proposals. The RFP is usually advertised requesting the submittal of technical proposals which are evaluated by a selection committee upon receipt. Thereafter, discussions are held with the proposers to determine the completeness of their responses and to allow them to make changes in their proposals if appropriate. These discussions are normally concluded when the municipal entity requests a best and final offer from each respondent by a specific cut-off date. Upon receipt of these offers, the municipal entity reviews and evaluates them. The proposer whose offer is most responsive and complete is subsequently awarded the turnkey contract. Negotiating turnkey procurement in New York State is regulated by Section 120-w of the New York State General Municipal Law (Section 120-w).

7.3.3.3 Full Service with Private Ownership

The full service approach represents an expansion of the contractor's role from that described in the A/E or turnkey methods. In the full service with private ownership procurement method, the municipal entity assigns total responsibility to a private firm over the life of a waste disposal facility, recycling facility or recycling service, possibly including the design, construction, start-up, acceptance testing, operation, ownership and, in certain instances, limited responsibility for providing for a portion of the financing. Ownership of a full service procurement facility may involve partial equity contributions by the contractor, private investors, or an autonomous public entity such as an industrial development authority. The full service procurement method with private ownership approach allows a municipal entity to acquire recycling or disposal services without making itself responsible for daily operation and maintenance.

However, it is important to note that the municipal entity should continue to play an active role in solid waste management. By developing the procurement process, monitoring the ongoing performance of the full-service contractor, coordinating with the appropriate regulatory agencies and continuing to have alternate responsibility for solid waste management, the municipal entity will in fact have an ongoing role in solid waste management.

The full service approach allows for some flexibility in conducting the procurement and negotiation processes. Historically, proposals were received in response to an RFP and one vendor then selected for contract negotiations. This approach basically ended the competitive nature of the procurement process at the start of the contract negotiations. As a result, the contractor was placed in a very strong negotiating position, since the municipal entity usually had committed a significant amount of time and money to get to that point. In addition the community is often faced with limited time schedules to meet regulatory requirements, which would severely restrict its ability to go back and start negotiations with the second-ranked contractor.

A recent development in the procurement process is to extend the competitive aspect of the procurement process by conducting contract

negotiations with several qualified contractors simultaneously. These "simultaneous negotiations" are conducted after proposals have been received and serve to clarify and finalize any issues that exist in the proposals. At the end of these negotiations, the community should have a final contract agreement that is acceptable to it and to the contractors who have completed the negotiating process. This approach has been very successful on a number of waste-to-energy projects and can be used for other solid waste disposal facilities such as recycling, composting and landfill facilities.

Normally, the process begins with the municipal entity advertising the release of a draft RFP to contractors. The draft RFP contains some basic information such as system performance, procurement schedule, desired technology, and financing requirements. The draft RFP also requires contractors submitting proposals to include detailed technical, managerial, and financial qualifications.

Once the contractor proposals have been received, the documents undergo detailed evaluation (technical, legal, and financial) to rank the proposals according to the criteria established in the RFP. The next step is to begin competitive negotiations with usually two or more of the top-ranked proposers as described above. Once the final proposals revised on the basis of the simultaneous negotiations have been received and evaluated, the contract is typically awarded to the single top-ranked proposer.

7.3.3.4 Full Service with Public Ownership

In this full service procurement method, the waste disposal facility is owned by the municipal entity rather than the private sector. The design, construction, and operation of the waste disposal facility, however, are still the responsibility of the contractor.

At the end of the full-service contract, the municipality either has a viable asset (in the case of a recycling or mixed waste processing facility) or should have a greater degree of confidence in the integrity of the landfill, since the municipal entity was involved and informed as to the operation of the facility.

7.3.3.5 New York State General Municipal Law

In New York State, the procurement of a solid waste disposal facility or facility expansion is affected either by competitive bidding (Section 101 and 103 of the General Municipal Law) or by Request for Proposals under New York General Municipal Law Section 120-w. Since the question of which requirements are applicable to a specific procurement involves legal questions, the Town should obtain appropriate legal counsel with regard to this issue prior to pursuing the procurement of a new facility.

However, based upon Malcolm Pirnie's involvement in other solid waste management/resource recovery projects in New York, it is our understanding that, with the exception of the conventional A/E approach, the procurement of a resource recovery facility or facility expansion is regulated by Section 120-w. Section 120-w contains provisions which address unique aspects of turnkey and full service procurements such as:

- The use of long-term (up to 25 years) service agreements with private companies for the design, construction, and operation of resource recovery facilities
- The use of long-term contracts for the sale of products (such as steam, electricity, and/or materials) recovered by the facility.

Section 120-w also identifies the procedure for conducting the procurement process, and indicates that the overall cost of the facility should be a major criterion in the selection of contractors.

7.3.3.6 Summary of Facility Procurement Methods

The key responsibilities of involved parties in a solid waste disposal facility for each of the four previously discussed procurement methods is presented in Table 7-8.

In addition, Table 7-9 presents a summary of the procurement methods and key criteria to consider in selecting a procurement method. As indicated above, the Town will continue to have the ultimate responsibility to dispose of the waste in the event of a contractor failure. Accordingly, it is appropriate for the community to maintain sufficient control to minimize the opportunity for exposure of the community to the environmental, technical, contractual, legal, and financial risks as-

sociated with solid waste disposal facilities. As the Town moves forward with the implementation of its solid waste management system, it will be necessary to consider these issues in determining the procurement process for the facilities which are to comprise this system.

7.3.4 Financing and Funding Assistance

The construction and operation of solid waste disposal facilities involve substantial capital expenditures as well as operating budgets. Accordingly, an examination of financing and funding assistance alternatives is appropriate. As previously mentioned, the construction of proposed solid waste facilities is likely to be the largest public works project ever to be undertaken by the Town and therefore careful consideration is advised.

Generally, solid waste disposal facilities can be financed from public sources, private sources, or some combination thereof. The cost of financing also must be considered when evaluating terms, issuance costs, and interest rates. In addition, it may be possible to obtain funding assistance in the form of grants or subsidies to aid in the financing of such a project.

There are numerous financing sources for a solid waste disposal facility in the Town. Instruments such as general obligation bonds, municipal revenue bonds, industrial development bonds, pollution control revenue bonds, and alternatives like leveraged leasing may be utilized alone or in various combinations to provide the necessary financing to implement the Town's solid waste management program.

The following provides an overview of the various financing instruments and types of funding assistance that may be available to the Town for implementing solid waste facilities.

7.3.4.1 Sources for Financing

There are several methods available as sources for financing solid waste disposal facilities in the U.S.:

- General Obligation Bonds
- Municipal Revenue Bonds
- Industrial Development Bonds
- Pollution Control Revenue Bonds
- Leveraged Leasing

TABLE 7-8

TOWN OF SOUTHAMPTON
PRIMARY RESPONSIBILITIES OF INVOLVED PARTIES
BY PROCUREMENT METHOD

Stages of Project Development	A/E	Turnkey	Full Service Private Ownership	Full Service Public Ownership
Facility Planning	M, E	M, E	M, E	M, E
Preparation of Facility Specifications	E	C	C	C
Facility Design	E	C	C	C
Construction Supervision and Management	E	C	C	C
Construction and Equipment Installation	C	C	C	C
Facility Start-up	M, C	M, C	C	C
Facility Acceptance Testing	M, C	M, C	C	C
Facility Operation	M*	M*	C	M, C
Facility Ownership	M	M	C	M

Notes:

M = Municipal Government
E = Engineer
C = Contractor

*It should be noted that the municipal entity has the option to contract with the private sector for operation under these procurement methods.

TABLE 7-9

TOWN OF SOUTHAMPTON
KEY CRITERIA FOR SELECTION OF PROCUREMENT METHOD

			Full Service	
Key Criteria	A/E[1]	Turnkey[1]	Private Ownership	Public Ownership
Capital Cost	Lower	Moderate	Moderate	Moderate
Operating Cost	Moderate	Moderate	Low	Low
Potential for Lowest Long Term Disposal Cost	High	Moderate-High	Low	Moderate
Lead Time Required for Implementation	Moderate	Moderate High	Moderate-	Moderate-High
Municipal Responsibility for Preparation of Specifications	Moderate-High	Low	Low	Low
Municipal Responsibility for System Performance During Operation	Moderate-High	Moderate-High	Low[2]	Low[2]
Municipal Responsibility for Marketing of Recovered Products	High	High	Low[2]	Moderate
Overall Risk Assumption by the Municipality	High	Moderate	Moderate	Moderate

Notes: (1) The A/E and turnkey approaches are construction-related procurement methods, and therefore, the decision on operation approach (public or private) may impact the discussion of the operating issues.

(2) Responsibility for these areas is typically the vendor's responsibility, however the municipality can take contractual responsibility in either public or private ownership.

- Private Equity
- Other Sources

The following subsections discuss these sources of financing available for solid waste disposal facilities.

General Obligation Bonds

General obligations (G.O.) financing is backed by the full faith, credit, and taxing power of the issuing municipal government. As a result, the credit rating of the governmental entity is the primary determining criterion as to the cost of financing rather than the technical or marketing risk associated with the project.

G.O. bonds are secured by a pledge of ad valorem taxes despite the possibility that the bonds may be paid from other sources of unrestricted income such as income taxes, sales taxes, and other fees. Therefore, G.O. bonds normally carry the lowest interest rate among available financing sources. The low interest rate is the expected outcome when a municipal entity produces the guarantees to back such an instrument.

When determining whether G.O. bonds are appropriate for financing the Town's solid waste disposal facilities, certain factors must be considered including, but not limited to:

- Current credit rating of the Town
- Debt ceiling on the issuing body's borrowing capacity
- Projected impacts of the financing on the issuing body's credit rating
- Availability of other types of financing.

The Town may wish to consider G.O. bond financing if it is determined that the waste management facility(ies) will be publicly owned.

Municipal Revenue Bonds

Municipal revenue bonds (revenue bonds) are long-term, tax-exempt obligations that are payable from the project revenues or revenues from other facilities owned by the Town. Revenue bonds are also referred to as project revenue bonds since the success or failure of the project directly affects the ability to repay the debt.

Revenue bonds for a solid waste disposal facility rely on the revenue generated from the project, such as user tipping fees and material and/or

energy recovery revenues. Generally, revenue bonds issued by a municipal entity require a pledge to set and collect rates and charges for performance of the facility that equal the operating expenses, bond principal, and interest during the life of the issue.

Interest rates on revenue bonds are usually higher than the interest rate on G.O. bonds since there is more risk in the instrument because repayment depends upon success of the project. Because the potential for unforeseen revenue shortfalls is implicit with the increased risk of revenue bonds, such instruments necessitate the formation of a debt service reserve fund as protection against this event.

Industrial Development Bonds

Industrial development bonds (IDBs) represent another form of revenue bond. IDBs are normally tax-exempt, long-term bonds issued by a municipal entity or a public benefit corporation acting on behalf of the municipal entity to foster industrial or economic development.

The use of IDBs to finance a project results in the project either being leased or sold to a private corporation, or, in some instances the bond proceeds are loaned to a private corporation. Although IDB's have been successfully used for solid waste disposal facility financing, the Federal Tax Reform Act of 1986 (the Act) has significantly changed the use of such an instrument. For example, the Act reduced the tax-exempt IDB allocation for privately owned waste-to-energy projects. Therefore, privately owned projects must now compete with all types of industrial development projects for a share of the State's allocation during the year. The allocation limit established in the Act is set at $50 per capita or $150 million per state.

Another impact of the Act on IDBs is the establishment of non-qualifying costs. In certain cases, non-qualifying equipment costs are limited to 5 percent of tax-exempt issuances. Thus, under this "95/5 rule", expenses for the construction or installation of equipment related to the sale of by-products from the facility are not tax-exempt. Examples of non-qualifying equipment include magnetic separation equipment for the recovery of ferrous metal in a materials recovery facility. Therefore, these portions of the facility expenses must now be financed with taxable debt.

Leveraged Leasing

Leveraged leasing is a financing alternative rather than a financing instrument such as bonds. In leveraged leasing, the intent is to finance the project so that the project participants will gain either tax benefits or lower financing costs.

These benefits are realized by the leveraging of equity investor funds for a "passive" third party investor who then turns around and leases the facility to the user or operator. This financing alternative can be successfully utilized when the user or operator cannot obtain the full tax benefits of facility ownership. Therefore, the involvement of a third party to provide the equity contribution and lease back the facility can provide lower financing costs for the community.

However, due to the Tax Reform Act of 1986 reducing the attractiveness of private equity as a financing source for solid waste disposal facilities as described under Private Equity, this method, while still available, is no longer commonly used.

Private Equity

Private equity is another financing source available for solid waste disposal facilities. Private equity involves capital contribution from the facility developer or third parties such as commercial banks, insurance companies, and private investors. This alternative is restricted to privately owned facilities.

In a private ownership structure, private equity as some percentage of the capital construction cost is invested by the developer and possibly a third party. The private equity contributed by investors normally requires that the developer become the owner of the facility. The profits include a rate of return are generated from accrued revenues for the project such as user tipping fees, a share of the project's energy and/or materials recovery revenue and the attainment of tax benefits as owner of the facility.

The private equity contribution can be made up front during the construction phase as a lump sum or spread out over a fixed term in installments. The lump sum method has the advantage of lowering the required bond size while the installment method has the advantage of subsidizing tipping fees during that term.

The Tax Reform Act of 1986 has significantly reduced the attractiveness of private equity as a financing source for solid waste disposal facilities. Examples of significant changes include the elimination of the 10 percent investment tax credit, doubling of the depreciation schedule for both real and personal property from 5 to 10 years, and the reduction of the use of tax-exempt debt for facilities.

The Town may wish to seek an equity contribution if the solid waste management facility(ies) are to be privately owned.

Other Sources

In addition to the alternatives described above, there are other sources that may be used to finance solid waste facilities. An example of another source would be the use of bank loans. This approach is typically used for smaller projects which may not require enough capital to warrant a bond issue and may have shorter repayment schedules.

7.3.4.2 Review of Funding Assistance

Funding assistance, typically in the form of grants or low-interest loans, may also be available to offset the costs associated with the solid waste management program. Such funding may be available from federal, State, and/or local sources. Historically, the federal government has not provided direct funding for solid waste programs. However, prior to the Tax Reform Act of 1986, significant tax advantages were available for solid waste projects. The principal source of funding assistance has been the States. In the case of New York State, there are several sources of funding available. For recycling activities the Local Resource, Reuse and Recovery Program (LRRRP) and Environmental Quality Bond Act (EQBA) are two grant programs which have provided funding for public education and recycling equipment, respectively. The five Eastern Long Island towns have received approval for a LRRRP grant for hiring a recycling manager and for a public education program (See Section 6.2.1, Eastern Long Island Towns). In order to obtain funding through the EQBA resource recovery grant program, submission of a report of the municipality's progress in meeting the state's solid waste management goals is required. Accordingly, the Town submitted a report of the Town's progress in developing its

GEIS and its mandatory recycling program. Based upon the progress reports received, the State distributes the grant moneys on a priority basis.

The Town should continue to monitor State as well as federal activities to determine if other sources of funding will become available, and whether such funding is applicable.

7.3.5 Risk Posture

Risks associated with implementing solid waste management facilities have increased significantly in the recent past due to the development of more stringent regulations, emergence of new and complex disposal technologies and the concurrent increase in costs. To minimize these risks and the associated costs, it is crucial that the risks be carefully weighed from a technical and financial point of view. This means using a flexible procurement and implementation approach to deal with the new developments in the field as they arise as well as building various guarantees and safe guards into the program. The desired risk posture of the Town will influence the evaluation of whether to build an in-Town composting facility or participate in a regional facility.

There are several risk areas typically associated with implementing a solid waste disposal facility, including the following:

- Recovered products risk
- Solid waste stream flow risk
- Facility ownership
- Legal and regulatory risk
- Facility construction risk
- Facility operation risk

The following subsections discuss the elements comprising these six risk areas. A general discussion of how to minimize or allocate these risk elements is also presented.

7.3.5.1 Recovered Products Risk

The primary risk element associated with products recovered from a solid waste facility recovering materials and/or energy is that of lower than expected product revenue or an inability to market a major facility product. Reduced revenues may result from a reduced amount of products recovered based upon facility performance or may be the result of

variances in market conditions. Recovered products may include materials such as compost, paper, glass, aluminum, and ferrous metal and/or energy.

Should lower market prices occur, there is a risk of a revenue shortfall. Perhaps the best method for reducing this risk is to enter into long-term contracts for sale of the recovered products. This has historically been easier to achieve for the sale of recovered energy products than for recovered material products. Problems associated with obtaining long-term contracts for recovered materials include unstable markets, stringent product specifications, and the variable quality of the recovered materials. In the case of compost, for example, it is usual for products to require a considerable period of energetic marketing before acceptance is achieved, and even then long-term sales cannot usually be contracted for. Based on the difficulty many past compost projects have had in marketing their products, this risk is a very important consideration.

7.3.5.2 Solid Waste Stream Flow Risk

There are two primary risk elements associated with the solid waste stream flow. First, there is the potential failure of a sufficient quantity of solid waste to be delivered at a waste disposal facility. Second, there is a risk of detrimental characteristic changes in quality of the solid waste.

The first risk has historically been the responsibility of the municipal entity, whether it be the Town or another entity empowered to develop municipal waste management facilities in the future (e.g., E2RA or Brookhaven). To minimize the burden of this risk, the municipal entity must guarantee that the solid waste stream generated within its jurisdictional boundaries will be routed and delivered to the waste disposal facility. Methods of achieving this solid waste stream flow control to reduce the risk involved are outlined in Section 7.3.2, Solid Waste Stream Flow Control.

In addition to control of the mixed waste stream, another variable that affects the quantity of waste is the efficacy of the source separation program. The overall size of the Town's mixed waste stream after recycling may vary significantly depending on recycling success, as

discussed in Section 3.3.3.3, Potential Capture of Selected Recyclable Materials from a Curbside Program. Accordingly, a successful source separation program can affect the economics of an oversized mixed waste processing facility by decreasing the waste stream flowing to that facility. Conversely, if an over-optimistically high recycling capture rate is assumed in sizing a mixed waste processing facility, the facility may be overwhelmed with mixed waste, and expansion of the facility would be required. Accordingly, the facility should be sized and related financial analyses should be based on a reasonable estimate with allowances for waste stream variation and with provisions for future expansion. The Town should be conservative in its waste quantity guarantees, accounting for seasonal fluctuation (if a guarantee based on less than an annual total is provided) and future recycling. The Town may have data available from its source separation program to refine its estimates by the time it would be required to provide such a guarantee. Similarly, if the Town provides a guarantee of source separated recyclable materials, consideration of varying collection efficiencies and seasonal fluctuations should be taken into account.

The second risk element regarding the solid waste stream is the potential impact of detrimental changes in the quality of the solid waste deposited at the facility. For example, the percentage of various types of paper, plastic, and metals can affect the economical operation of a source separated or mixed waste processing system. Since neither the municipal entity nor the operator of a solid waste facility has direct control over the composition of the solid waste, this is an area of risk which can be shared contractually. By making waste composition a risk that the contractor is responsible for, the municipal entity is protecting itself from significant exposures on the operation of the facilities, but this allocation of risk is typically offset by an increase in costs since the contractor wants to be compensated for accepting this risk. Further, any assumption of risk by a contractor is only as good as the Towns ability to collect any damages through rigorous contractual provisions and vendor financial backing.

In summary, solid waste stream flow control for guaranteed quantity is generally the responsibility of the municipal entity from within whose

jurisdictional boundaries the solid waste stream delivered to a facility is obtained, while the risk associated with waste composition is generally allocated to the contractor or shared by the municipality and the contractor.

7.3.5.3 Facility Ownership

A decision regarding the ownership of a waste disposal facility is one of the most important issues a municipal entity must address. To be able to reach that decision, consideration must be given to several key factors. There are basically only two methods of ownership for a solid waste disposal facility:

- Public ownership
- Private ownership.

This section will discuss, in general terms, the key factors that should be evaluated in analyzing different ownership arrangements and also what the relative advantages and disadvantages are for each arrangement.

Public Ownership

In a public ownership arrangement, a waste disposal facility is usually owned by the municipal entity whose solid waste stream is disposed of at the facility. This may be a county, one or more municipalities, or an autonomous public entity such as an industrial development or municipal authority. This ownership arrangement has historically been used for public works facilities such as water and wastewater treatment plants, roads, and school buildings.

A major advantage associated with public ownership is the level of control the municipal entity maintains over the program. This control can manifest itself in a number of ways including negotiations with regulatory agencies regarding permitting issues, directing private operators to comply with contractual or regulatory requirements, or using municipal employees to operate the facility or monitor the day- to-day activities of a private operator. In addition, with the recent changes in tax laws, the economic advantages of private ownership (such as accelerated depreciation and investment tax credits) are greatly reduced. Through public ownership, the community should own a viable asset in the

form of a recycling, compost, or waste-to-energy facility, and when the bonds are paid off, the Town, not the vendors, owns the facility.

Disadvantages of public ownership include increased responsibility for facility operations as well as more direct involvement in the risks associated with operation and ownership of such facilities. To some extent, operating risks (such as operating costs, technical issues, regulatory compliance) can be shifted to a private operator through either a full-service contract or, in the case of an A/E or turnkey procurement, through an operating contract.

Private Ownership

In a private ownership arrangement, a waste disposal facility is owned by a private firm, typically the full-service contractor. This ownership arrangement for solid waste disposal facilities became quite popular in the 1970's and early 1980's as a result of the tax advantages available under the tax laws in place at that time.

From the standpoint of the municipal entity, private ownership of the waste disposal facility can help offset some of the construction capital costs, in that equity capital contributed by the private owner may be applied towards the debt. The equity capital provided by the private owner usually takes the form of either one lump-sum contribution or several annual contributions early in the life of the waste disposal facility. Regardless of which form is preferred, the equity contributions must be structured such that the private firm is recognized as the owner of the waste disposal facility if any tax benefits are sought. The private equity contribution is typically augmented with either tax-exempt or taxable bonds to complete the financing.

Currently, approximately two-thirds of all waste-to-energy facilities in operation or under construction will be privately owned. However, a major impact on this trend has been the Act. The Act has significantly altered some of the tax benefits previously available for private owners of waste disposal facilities. Perhaps the most drastic change is the reduced availability of tax-exempt industrial development bonds (IDB's) for financing the construction of a waste disposal facility. Other significant changes include the loss of investment tax credits, classifying passive activity losses undeductible and the phasing out of

accelerated cost recovery system (ACRS) for depreciation. These tax reform impacts are discussed further in Section 7.3.4, Financing and Funding Assistance.

The primary advantage of private ownership has been the economic benefits of reduced capital cost by having the private owner pass the tax advantages on the community in the form of an equity contribution. As previously indicated, this advantage has been described by changes to the tax laws. Another advantage offered by private ownership is placing the risks associated with the day-to-day operation of the facility on a private firm. This approach can be valuable, particularly when the community does not have the resources or technical capability to operate the facility. It should be noted that private operation is an option in a public ownership approach.

A disadvantage of a private ownership arrangement is that the municipal entity will not own the waste disposal facility even though its taxpayers have contributed significantly towards retirement of the bonds used to finance its construction. Another disadvantage of a private ownership arrangement is that the municipal entity will have limited control over operation of the facility.

Summary of Facility Ownership Methods

Table 7-10 presents a comparison of key factors that should be considered in evaluating the ownership approach to be taken to solid waste management facilities. In addition to these factors, other issues which can affect the ownership decision include the procurement approach utilized, the risk appetite of the community, and the type of facility. If inter-town cooperation seems appropriate, it may also for necessary for the Town, the East End Recycling Association or a Regional Authority to determine the most appropriate ownership approach for common source separated waste processing facilities.

7.3.5.4 Facility Construction Risk

There are many risk elements associated with facility construction. Chief among these are:

- Facility design errors and omissions
- Underestimation of facility construction

MALCOLM PIRNIE

TABLE 7-10

TOWN OF SOUTHAMPTON
KEY FACTORS FOR CONSIDERATION
IN DETERMINING FACILITY OWNERSHIP

Key Factor	Ownership Method	
	Public	Private
Control Over Project	High	Low
Allocation of Operating Risks	Moderate	Low
Initial Cost to Town	Moderate	Moderate
Final Cost to Town	Moderate	High
Recovered Resources Revenue	To the Municipal Entity	To the Private Owner
Book Value Assets After Amortization and Retirement of Bonds	To the Municipal Entity	To the Private Owner
Facility Availability	High	Moderate

- General inflation
- Failure of contractor to meet its schedule due to events such as subcontractor problems or strikes
- Problematic subsurface conditions
- Force majeure.

In the case of a full service procurement method, these risks can usually be allocated to the contractor with the exception of force majeure events. This is possible since the contractor is normally responsible for the design, technology performance, and equipment in this procurement method.

Other facility construction risks within the reasonable control of the contractor also are the burden of the contractor. Examples of these risks include, but are not limited to, total construction price, construction time, and performance of the subcontractors within budget and on schedule. Typically, these risks are insured against by project insurance policies and construction and performance bonds.

Facility construction risks that are normally the burden of the municipal entity include uncontrollable events and force majeure. Examples of these risks are:

- Earthquakes
- Floods
- Other natural disasters
- Sabotage
- War, declared or undeclared
- Explosions
- Any other acts of God

Although these risks may be significant, they typically can be minimized by the municipal entity through the use of specific insurance policy coverage for such risks.

7.3.5.5 Facility Operation Risk

Important risk elements associated with the operation of a solid waste disposal facility include, but are not limited to:

- Unexpectedly high operating costs

- Facility damage and unscheduled downtime resulting from the processed solid waste

- Increased regulation and cost for non-processable waste and facility residue disposal.

The use of a full service procurement method or private sector operation of the facilities can reduce these risks to the municipal entity by sharing or allocating most of these risks onto the contractor.

7.3.5.6 Legal and Regulatory Risk

The development and implementation of a solid waste management program can involve a wide range of legal and regulatory issues representing risks which will be addressed by the municipality or private sector. The following are three major examples of these types of risks:

- Environmental permitting risks
- Tax code change risks
- Change-in-law risks

Risks due to environmental permitting arise from the realization that permitting of a solid waste disposal facility can be one of the most time-consuming and difficult steps in the entire implementation process. Reasons for this difficulty include both the voluminous amount of data required for application submission to governmental agencies and also the distribution of permit reviews among federal, State, and local agencies.

In addition, there is a wide range of environmental and regulatory issues that are addressed during the permitting process. These issues can range from health risk assessments to approval of long-term energy agreements, to potential impact on sensitive environmental resources, to local building permits. To adequately address all of the permitting issues involves a lengthy and complicated process that typically involves the municipal entity and its legal and technical advisers as well as the private sector firm responsible for design, construction, or operation (or, in a full service arrangement, responsible for all of these activities).

Tax code changes represent a specific area where the municipality can shift the risk to the private sector firm. This approach has been utilized in many full-service projects, and with the changes in the 1986

Act it represents an area where contractors should continue to be willing to accept this risk. In addition to tax code changes, the potential for change in law to other laws and regulations represents another potential risk facing communities in developing solid waste management programs. These types of changes can involve environmental regulations that require new or different standards for the construction and/or operation of facilities. This risk is virtually always a risk the community must bear, since private contractors are very reluctant to commit to meeting standards or requirements that they are unaware of at the time of entering into a contract.

7.3.5.7 Summary of Risk Elements

The likelihood and feasibility of a solid waste disposal facility to satisfactorily dispose of the Town's solid waste stream is strongly influenced by the assessment of potential risks and their equitable allocation among the project participants. A summary of these risk elements and their typical allocation is provided in Table 7-11.

7.3.6 Reliability and Feasibility

Because the Town is responsible for supplying solid waste disposal facilities, it is important to choose a system of technologies that are both reliable and feasible. Factors to be considered when determining the reliability and feasibility of an option include the following:

- Technical feasibility
- Operating reliability
- Marketing security
- Financing
- Public acceptance
- Environmental issues
- Compatability with NYSDEC solid waste hierarchy
- Compatibility with Town's solid waste management goals

This section considers the above factors with respect to the non-incineration (front-end processing, MSW composting, and co-composting) and the incineration (mass burn, RDF, and waste distillation) options for processing mixed waste.

Non-Incineration Options

While there is little question that MSW contains many materials that can be successfully composted, full-scale operating projects in the U.S. have had only marginal success so far, and the field is generally considered to be in a developmental phase. Many facilities have been shut down because of various technical and marketing problems, or because they could not compete with the economics of lower cost landfill disposal. Of 27 facilities recently surveyed by Malcolm Pirnie that were constructed between 1951 and 1988, only a few are still operating and some of these operate on an interim basis. Many of these projects are relatively small in size, and most did not adequately address the tough questions that must be answered to make the operation a success.

However, a number of projects involving composting of sewage sludge and/or leaves and yard wastes are successfully operating at this time, and the European MSW experience, while somewhat different, has provided opportunities to visit and review a number of system and ideas that could be potentially useful here.

A major factor in determining the feasibility of a composting project is to identify a market for the compost product. As discussed in Section 7.3.1.2, Materials Markets, composted MSW may contain contaminants that create marketing difficulties. The product must meet the standards of the users and must be environmentally acceptable. In addition, the market is limited by the land area available where compost can be utilized in the region where the composting facility is located. Typically, it is not possible to obtain a long-term contract for the sale of compost, and the transport of compost to another region is typically not economically feasible. Accordingly, the Town should pursue a detailed market study and market development activities if a composting facility is to be implemented.

Any compost not marketed (either for sale or given away) or utilized by the Town will end up being landfilled. As discussed in Section 8.0, Residual Waste Landfill, the Town has available capacity at the Landfill, however, the use for this purpose is restricted by the Landfill Law and by NYSDEC Part 360 regulations. The composted material will occupy less

MALCOLM PIRNIE

TABLE 7-11

TOWN OF SOUTHAMPTON
ASSESSMENT OF RISK ELEMENT ALLOCATION
FOR A SOLID WASTE DISPOSAL FACILITY

			Full Service	
	A/E	Turnkey	Private Ownership	Public Ownership
Solid Waste Stream				
Insufficient quantity	M	M	M	M
Negative compositional changes	M	M	M	M
Recovered Products				
Lower than expected revenue	M	M	M	M
Facility Construction				
Design problems	M	C	C	C
Poor equipment performance	C	C	C	C
Ground and subsurface problems	C,M	C,M	C,M	C,M
Inflation and cost overruns	C,M	C,M	C	C
Force Majeure	M	M	M	M
Other	C,M	C,M	C,M	C,M
Facility Operation				
Acceptance Testing	M	C	C	C
Facility damage from waste	M	M	M,C	M,C
High operating costs	M	M	C	C
System Performance	M	M	C	C
Residue disposal	M	M	C,M	M
Environmental Compliance*	C	C	C	C
Force Majeure	M	M	M	M
Legal and Regulatory				
Environmental permitting	M	M	C,M	M
Tax code changes	C	C	C	C
Change in Law and Regulations	M	M	M	M

Notes:

M = Municipal Government
C = Contractor

*If privately operated, then the risk of environmental compliance is typically shared.

volume than non-composted material. In addition, the compost material could be considered as cover material for non-processed waste.

An option that could be vigorously pursued would be to transfer responsibility for marketing to the system vendor, however, it is usually prudent to have reasonable confidence that this can be done before accepting a guarantee. A vendor could also be asked to be responsible for disposing of any compost not marketed. The financial status of the vendor is very important to this risk transfer and should be analyzed to ensure the ability of the vendor to meet its guarantees.

To obtain financing of a project, the feasibility of the project must be established. The use of an emerging technology would likely require a substantial guarantee from the vendor, and if the vendor is not part of a well-established parent company with significant financial resources, the vendor may be required to have an alternate financial guarantor such as a letter of credit. With suitable provisions to "make the Town whole" in the event of a default or partial default. In addition, the Town itself may be required to provide some sort of guarantee, including backup disposal capacity in the event of system (or marketing) failure.

Non-incineration options tend to enjoy greater public acceptance than incineration options due to the relatively lower perceived environmental impacts of the non-incineration options. In addition, NYSDEC has indicated that in the solid waste hierarchy, composting is considered a recycling option for processing MSW. Accordingly, composting would rank above incineration in the hierarchy (see Section 5.0, Integrated Waste Management Concepts).

Representatives of the Town have expressed an interest in emphasizing recycling and avoiding incineration if this is practically achieveable. Accordingly, this report, while considering all the available options and identifying the potential difficulties of developing systems, has developed realistic scenarios in which the Town can critically assess its waste management goals in this context.

Finally, it should be noted that as landfill closures have forced the price of land disposal and waste-to-energy options to unprecedented levels, many communities similar to the Town, have decided to consider

more carefully the role that composting might have in an overall strategy. This renewed emphasis on composting has resulted in a significant increase in activities of all kinds, including the merging and dissolution of various vendor groups, increased interest by European system vendors, and the formation of an array of new firms who potentially can provide a wide range of products and services, as long as the Town is aware of the need to carefully structure the project to minimize unnecessary exposure.

In this regard, a key point is the recognition that the assumption of some additional risk may be required and that considerable care and attention to structuring the procurement, the design, and mitigating measures for environmental impacts will be needed to make the project a success.

Incineration Options

Incineration of MSW has a long history which has resulted in a variety of incineration technologies that are proven, reliable, and feasible. When an energy market is available, it is possible to negotiate long-term (e.g. 20-25 years) contracts for the sale of energy to a utility or industry. In addition, many projects have been successfully financed based on the experience and guarantees provided by the system vendor, the reliability of the technology and the revenues guaranteed by energy sales contracts and waste disposal contracts.

However, the perception of environmental risk coupled with a sense that conservation of material resources should command a high priority, has resulted in a climate where incineration options are not now receiving the same public acceptance as materials recovery systems with many segments of the public or regulatory agencies. Though many health risk assessments have been performed to allay the fears of health effects resulting from air emissions or residue generated from incineration of MSW, these effects remain controversial and in several instances, incineration projects have been delayed as a result of public opposition. Therefore, among the risks that must be considered is the overall concensus and direction that the Town wishes to pursue. In a very real economic sense, delay of any substantial order can be very costly.

7.3.7 Town Solid Waste Organization

The Landfill is currently operated by the Sanitation Department, which reports directly to the Town Board. Future administrative needs related to the Town's solid waste management program will be determined by the approach to implementation of the solid waste action management plan. For example, a publicly operated waste processing facility(ies) would require expansion of the Sanitation Department.

The basic duties that must be addressed during implementation of the SWAMP would include a liaison to provide the Town's input into the permitting and construction phases of implementation. The Town would also need to provide for any ongoing activities involved in municipal waste management, including maintenance and oversight of the recycling program. It is recognized that implementation of activities and facilities proposed in this SWAMP involve a significant and long term committment to solid waste management at a considerably higher level of resource needs than is presently required. The Town may consider opening a new position in the town work force dedicated exclusively to the development of Solid Waste Management programs depending on the need that will be more apparent when the program is being fully implemented.

7.3.8 Intertown Agreements

Recently, the inclusion of the Eastern Long Island towns in Brookhaven's Solid Waste Management Program has been proposed. Brookhaven's program, which includes mixed recyclables processing, organics composting and incineration, is currently in the early stages of implementation. Since Brookhaven is further along in program development than certain East End Towns, involvement in Brookhaven's program could lead to compliance with the Long Island Landfill Law.

At this time, the details of this proposal are not fully developed. Brookhaven is planning to determine the project variables and firm costs by the fall of 1990. Preliminary estimates of cost for disposal in a joint effort with Brookhaven appear to be higher than cost estimates for a Southampton only program (see Section 9.2.1, Preliminary Cost Analysis). The proposal is too preliminary to reach a definitive determination on

total costs since haul costs, ash disposal arrangements and other considerations, benefits and risks, and environmental assessments need to be factored into the ultimate decision. The Town review this option since it could provide an acceptable solution to a complex problem..

The five eastern Long Island towns are discussing development of a cooperative recycling program and have created a Regional Recycling Manager position funded with a LRRRP grant, as discussed in Section 6.2.1, Eastern Long Island Towns. In addition, a benefit of developing the regional recycling program is that the existing landfills will have an extended life. These separate disposal facilities would be available to provide backup to each other in the event that one of the facilities was temporarily not operating.

These Towns may also consider a joint effort for processing and disposal of mixed wastes remaining after recycling. However, each of the five towns currently operates one or more landfills and have established similar but somewhat varying approaches to long-term solid waste management. Further, Southampton's mixed waste stream is sufficiently large to provide a cost effective facility size. Accordingly, while the towns may cooperate in a regional recycling program, it is possible that they will continue to be wholly or partially responsible for disposal of mixed municipal waste on an individual basis.

Furthermore, the timing of events in the Town necessitates a concerted effort to establish a long-term procurement strategy as soon as possible. As discussed in Section 3.2.5, Consent Order Requirements, the Town is required to meet a strict schedule of solid waste management planning and implementation milestones. Accordingly, it appears that there may not be sufficient time to develop the intertown agreements that would be necessary for the East End Towns to develop and implement a wholly new plan for mixed solid waste disposal at this time unless a Landfill Law change can be secured collectively by the East End towns. Efforts are being undertaken to modify this law although the success of these efforts remain uncertain.

While cooperative efforts may enhance marketing of resources such as aluminum, glass, and paper, it may hamper marketing of compost, for

which the market may be local and more limited. Consequently, the Town may find itself in competition with other towns for compost market.

It is recommended however that the Town initiate discussions with Riverhead with regard to Riverhead plans for sludge disposal, since there could be some advantage to Southampton taking some or all of this sludge for co-composting. The feasibility of this option could be explored in conjunction with an RFP process to see whether it is economically viable.

7.3.9 Collection System and Transfer Issues

The current system consists of a combination of residential self-haul and private curbside or backyard collection service (see Section 3.2.2, Collection, for details). Thus far, the private haulers and residents have been cooperating in adapting to improvements to the existing recycling program although the cost of recyclables collection may increase as more items are added to the program. The commercial haulers have exhibited a continuing interest in working with the Town to adjust to logistical changes necessary to implement the SWAMP. Although existing practices appear to be adequate at this time and compatible with the SWAMP, two collection systems modifications issues; flow control laws as they affect collection, and the possible future consideration of garbage districts, are briefly considered in this section.

A "flow control" law enacted by a municipality places certain constraints upon collection and disposal of solid waste. Specifically, the Town may consider constraining the disposal of all or certain categories of garbage and recyclables to the Town-sponsored facilities. This law will ensure that sufficient quantities of these materials flow to the facilities to make them cost effective.

It is uncertain whether the Town has the research power to enact a flow control law. A Town flow control law raises a concern of intermunicipality conflict. It is also uncertain whether such a law is binding on incorporated villages in the Town under provisions of Municipal Home Rule Law and the New York State Constitution (Town of Islip v. Cuomo, 64 N.Y. 2d 50 (1984)). This also is a concern that the law would be challenged by private haulers or recycling firms as a monopoly violating the Sherman Anti-Trust Act.

It is likely, though, that the Town would be protected from such challenges through the "state action" doctrine which immunizes municipal activities that expressly or impliedly represent "the legislative command of the state". The legislative command in the solid waste area may arise from the New York State Solid Waste Management Act of 1988. See Municipal Control of the Flow of Solid Waste, A Briefing Paper to the Legislative Commission on Solid Waste Management (1985). The Town will consider all of these issues with its attorney prior to enacting any flow control ordinance, and determine any affect on the collection system.

The Town could also at some future time consider the formation of a garbage district or districts. In a garbage district system, the Town would engage private companies under formal agreements to collect garbage generated in that district. Since district contracts are let on an open, competitive basis, it is sometimes argued that the average cost of collection to the homeowner may be less. On the other hand, since commercial haulers have specified service limits and specifications under their contracts, the risk exists that good service through responsiveness to individual customer service and complaints will be sacrificed in exchange for profits. (See Refuse Collection Practice, Committee on Solid Waste, American Public Works Association, (3rd Edition, 1966)). Certainly, the Town would have to be more involved in administering the collection system under a district set-up. In addition, the Town may face Home Rule Law and monoply-oriented challenges similar to those described for flow control laws.

7.3.10 Drop-off (Transfer) Station Utilization

As discussed in Section 3.2, Existing Solid Waste Management System, there are two transfer stations that accept waste from self-haul vehicles and serve as drop-off centers for recyclables. It is recommended that these transfer stations continue current operations. However, the Town may wish to re-evaluate the low charge to the self-haul vehicles with regard to the actual cost of the current and future waste disposal program implemented. Specifically, it may be more equitable to establish a system where the fee would be related to the amount of waste delivered (e.g., a pay-per-bag program) or on the basis of actual cost of disposal. This

type of a program would also serve as an incentive for recycling in order to reduce the amount of waste delivered and avoid payment of the related fee.

In addition, as discussed in Section 10, Site Selection, the Hampton Bays Transfer Station is a well located large site and could be considered as a candidate site for a materials processing facility for recyclables.

The Town may wish to establish a leaf and yard waste composting facility at one of the transfer stations or to consider improvements to the transfer station roads or layouts to alleviate any traffic problems that may exist, during peak summer use.

It may also be reasonable to consider a future expansion of the Hampton Bays station to include hauler drop-off of refuse and recyclables and compacted waste transfer to the North Sea site. This option would offer the haulers who serve the West end of Town a shorter route, and more importantly would reduce traffic at North Sea substantially as the Town's waste load increases.

7.4 SUMMARY OF CANDIDATE OPTIONS

Various technologies and combinations of technologies have been explored in previous sections as a means of managing the Town's mixed solid wastes. These options can be considered for implementing a dedicated town facility or in the context of a regional approach. These technologies and combinations are reduced in this section to a set of generic candidate options for a summary discussion. The options were formulated based on the characteristics of the Town's waste stream; potential markets and uses for recoverable secondary materials and forms of energy; probable commercial availability; and technologies with a history of operation. The candidate options selected for evaluation cover a broad spectrum of solid waste management techniques. All include the requirement for disposal of process residues and nonprocessible waste. The candidate options identified are:

- Composting
- Co-composting
- Mass burn
- Refuse-derived fuel (RDF)
- Composting/RDF combination

All candidate options, except the mass burn option, incorporate front-end processing for recovery of recyclables as a preparatory step for further conversion of wastes to material products, energy, or both. The recovery of recyclables from mixed municipal solid waste would supplement that due to the source separation recycling programs. The candidate options listed above are summarized below.

Composting

Mixed solid waste is mechanically preprocessed in a front-end processing system to recover recyclable materials and to produce a compostable feedstock fraction (i.e., concentrated biodegradable organic materials). The compostable fraction subsequently enters a windrow or other type of composting system. After the compostables are composted for approximately one month, the biostabilized material is mechanically prepared for the bulk market using size reduction and screening processes. The latter processes comprise the post-processing activities. During front-end processing, non-recyclable process residues are generated. These residues are, in general, non-organic and inert materials. Post-processing also generates process residues comprised primarily of oversized materials, such as plastic film. A system schematic is illustrated in Figure 7-5.

Co-Composting

The co-composting option is identical to the composting option except that septage or sludge (if it is determined advisable to transport sludge from Riverhead) serves as a complementary feedstock. The advantage is that the waste water treatment residues have a relatively high nutrient concentration compared to compostables derived from mixed solid waste, and both the wastewater treatment residues and mixed solid waste can be jointly processed and converted to useful materials.

The wastewater treatment residues are mixed with the recovered compostables just prior to the composting operation. Consequently, both materials are composted together and subsequently post-processed. The overall system for co-composting is also shown in Figure 7-5.

Mass Burn

1. COMPOSTING

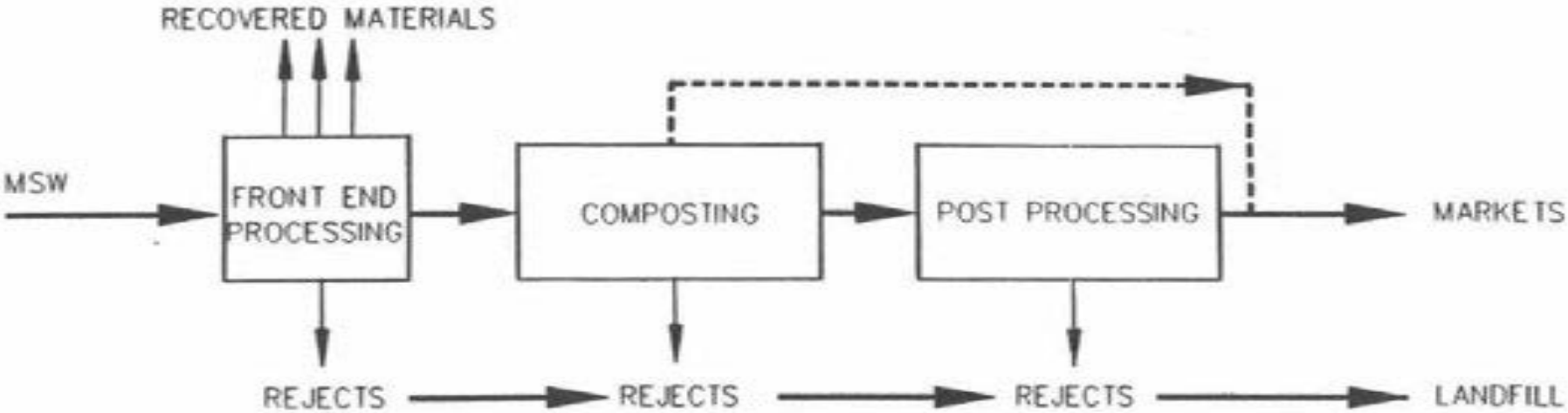

2. CO-COMPOSTING

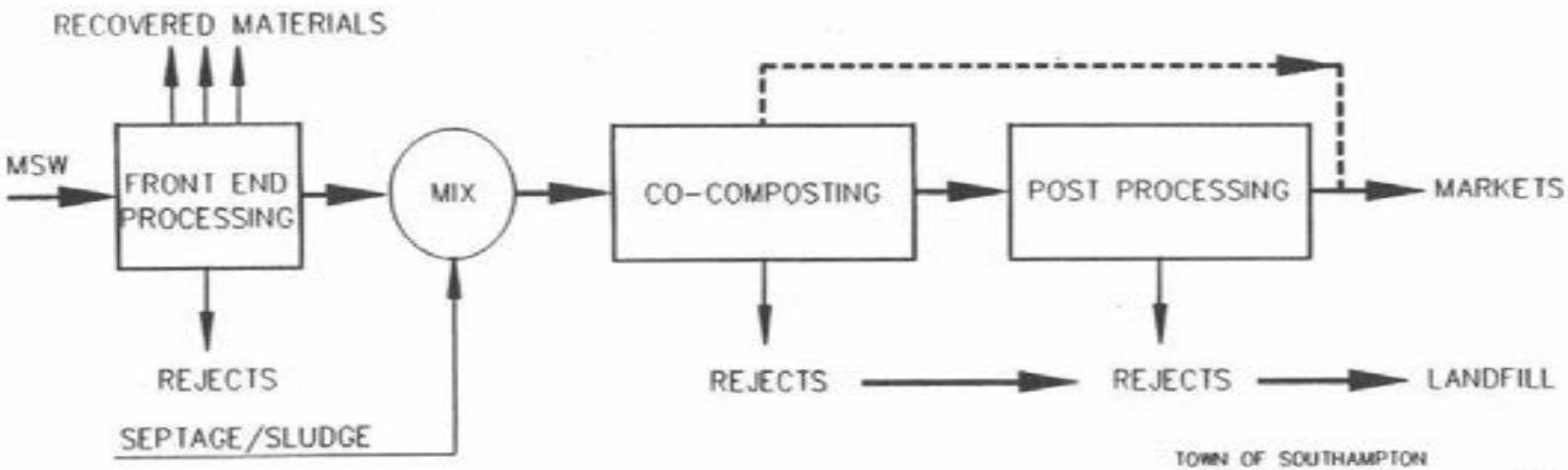

TOWN OF SOUTHAMPTON
SOLID WASTE ACTION
MANAGEMENT PLAN

COMPOSTING CANDIDATE OPTIONS

FIGURE 7-5

Due to the tonnage of mixed wastes generated by the Town, the applicable mass burn technology of choice is modular incineration or the use of a downstream convection boiler as discussed in Section 7.1.5. No preprocessing of the waste for recovery of recyclables is assumed in this option, although such a preprocessing system is technically feasible and may be potentially advantageous if sufficient recyclables remain in the mixed waste stream.

Modular incinerators or convection boiler systems, utilize primary and secondary combustion chambers to achieve a high degree of control of the combustion process, a minimum generation of gaseous pollutants, and complete burnout of the combustibles.

Both steam heat and electricity can be generated using modular incinerators, although the predominant in-place systems provide steam heat only due to the generally poor economics of electric generation from modular incinerator systems.

Modular incinerators produce solid residues in the form of bottom ash and of fly ash from the air pollution control system. A system schematic is illustrated in Figure 7-6.

RDF

A refuse-derived fuel (RDF) recovery option was conceived that could facilitate on-site dedicated RDF combustion or an off-site RDF market. The ultimate use in either case would be steam heat or electric demand. In this option, RDF is recovered from the mixed wastes by removing recyclable materials (such as magnetic ferrous scrap) and much of the non-recyclable, non-combustible materials by the means of a mechanical front-end processing system. This system is very similar to the preparation of compost feedstock. The resulting combustible fraction serves as a boiler fuel.

The RDF option will produce process residues from the front-end operation and ash from combustion of the RDF (unless the RDF is shipped to another facility) in addition to recovered recyclables and energy. An RDF system schematic is also shown on Figure 7-6.

Combination Composting and RDF

The utility of front-end processing with recovery of recyclables and of other high quality products has led to the design of back-end systems

sharing a common front-end processing system. This consequence is possible because the front-end processing equipment for composting, co-composting, and RDF combustion systems is very similar. Consequently, back-end operations utilizing composting or co- composting and RDF combustion systems can be fed by a single front-end processing system and many European composting plants are configured in this manner. Such an integrated system is illustrated in Figure 7-7.

The system shown in the illustration possesses the flexibility to recover recyclable materials as well as two products derived from the predominantly combustible (or organic) materials in the waste stream, namely RDF and compost. The ability to provide two avenues for marketing recovered combustibles/organics is a hedge against varying market conditions. Additionally, the recovery of recyclables by front- end processing improves the quality of the other recovered materials (i.e., RDF and compost).

The selection and recommendation of a preferred technology from among these candidate options is discussed in Section 9.2, where a procedure for ranking the options in accordance with criteria involving costs, potential environmental impacts, risks and conformity to the New York management hierachy is developed.

3. MASS BURN

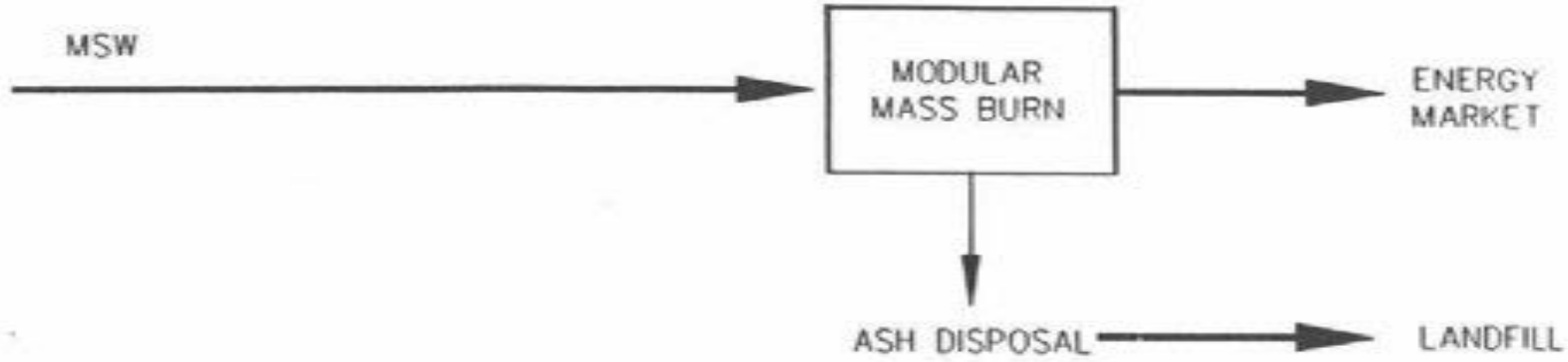

4. RDF

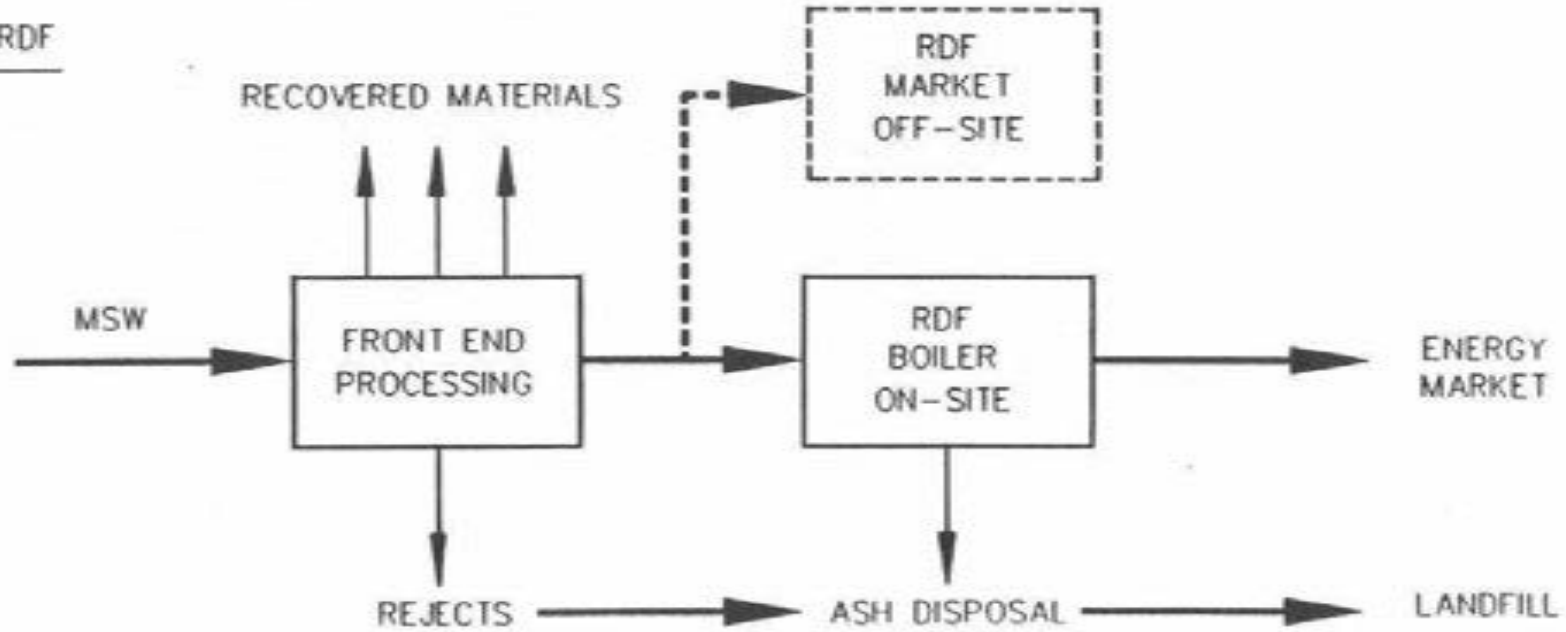

TOWN OF SOUTHAMPTON
SOLID WASTE ACTION
MANAGEMENT PLAN

WASTE-TO-ENERGY CANDIDATE OPTIONS

FIGURE 7-6

5. COMBINATION

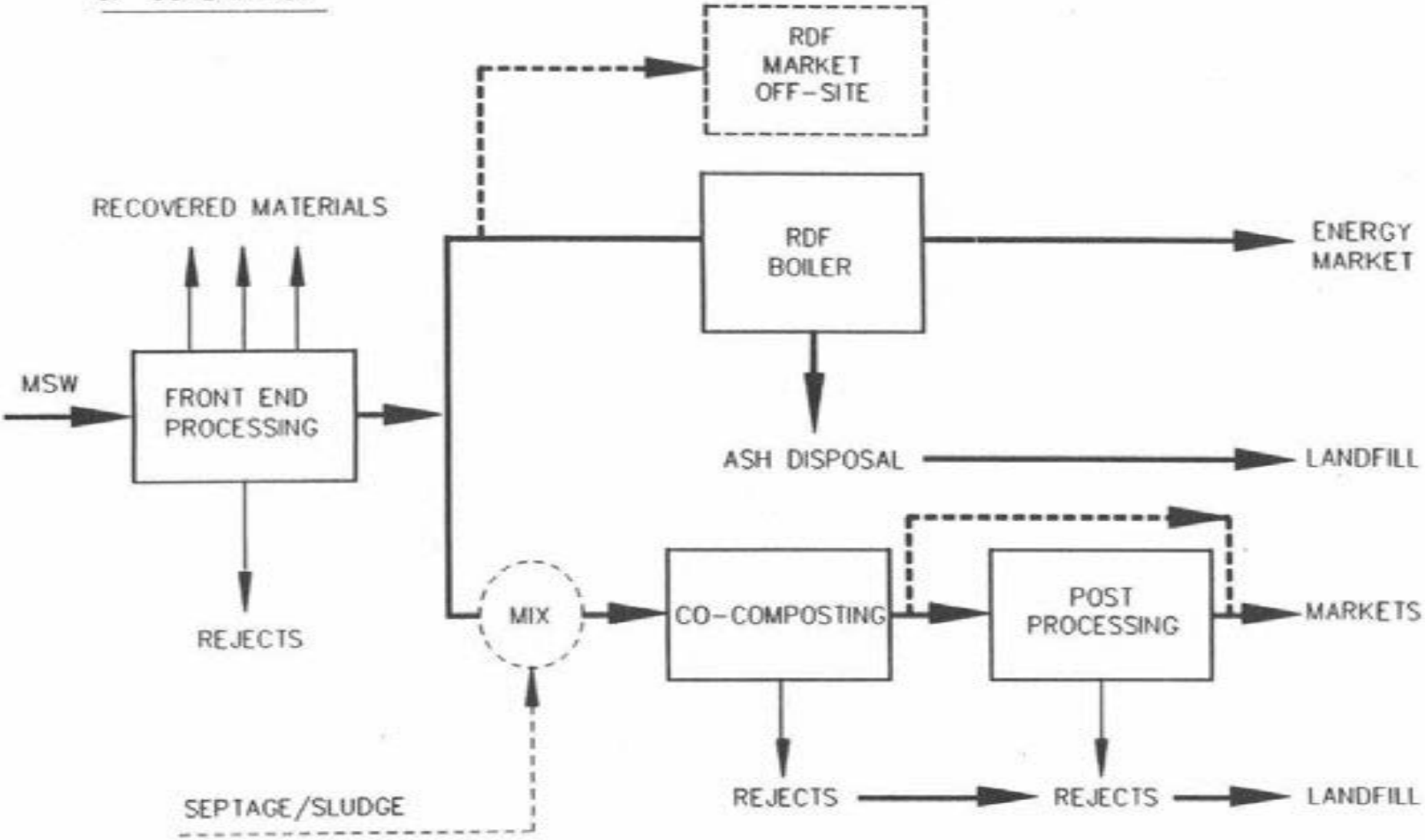

TOWN OF SOUTHAMPTON
SOLID WASTE ACTION
MANAGEMENT PLAN

COMBINED CANDIDATE
OPTION

FIGURE 7-7

7.0R MIXED WASTE PROCESSING SYSTEMS

Chapter 7.0 of the Original SWAMP described in detail each of the technologies available for dealing with Southampton's mixed solid waste stream and the environmental and implementation issues associated with each. While this information is still valid, growing concern expressed over mixed MSW composting caused the Town to consider composting only source-separated organic material, along with leaf and yard waste ("Selective Organic Composting"), as a viable option for managing its solid waste stream. As discussed further in Chapter 9.0R, this option, in combination with off-peak season MSW composting, is the preferred method which the Town proposes to be implemented.

7.1R TECHNOLOGICAL COMPARISON OF MSW AND SELECTIVE ORGANIC COMPOSTING

The principles of composting, as described in the Original SWAMP, are equally applicable to selective organic composting. Composting is simply the biological process in which wastes are stabilized and converted into a usable soil-like product, through degradation of the organic material in the waste. The Original SWAMP fully described various mixed MSW composting, organic composting and co-composting technologies. The major difference between MSW composting and selective organic composting is in selective organic composting, contaminating inorganic materials are fully removed from the waste stream prior to composting of the organic fraction. MSW composting relies upon the removal or stabilization of the contaminating materials in the waste as part of the composting process. Based upon documented failures, MSW composting has proven to be extremely difficult and risky to implement. In contrast, Selective Organic Composting requires preselection of the clean organic fraction of the waste stream for composting, while the contaminating inorganic materials are processed separately. Composting of selective organic materials has been performed successfully in many European communities, although operating experience in the United States is limited. The problems inherent in mixed MSW composting are set forth in greater detail in the articles listed under Additional References - MSW composting.

7.2R PROBLEMS WITH MIXED MSW COMPOSTING

The problems with mixed MSW Composting, which had been identified as potential issues in the Original SWAMP (See Sections 5.3, 7.1, 7.2, 7.3 and 9.2) were fully recognized in comments received by the Town in response to its draft Request for Proposals (RFP) issued in December, 1990 pursuant to the Original SWAMP. The draft RFP sought comments from potential bidders for the design, construction and operation of a solid waste recycling and MSW composting system. In general, the vendors commented that the compost generated by a combined waste stream would likely be contaminated by inorganic materials (glass, metals, etc.), and that, in addition, the capture of recyclables would be greatly reduced due to contamination and breakage.

These concerns have been confirmed by significant environmental and/or financial difficulties faced by many of the existing and proposed large scale mixed MSW composting facilities in the United States. Two promising facilities, the Agripost facility in Pompano Beach, Florida, and the Riedel facility in Portland, Oregon, have ceased operation within the past two years, due to a number of operational and financial problems.

These cases, and others, have caused many people and organizations involved with solid waste management to reassess the viability of MSW composting. One such organization, the New Jersey Advisory Council on Solid Waste Management, has recently issued a recommendation that MSW composting be put aside, in favor of composting of selected organics, source separated out of the mixed waste stream.

Moreover, due to contamination of the finished compost, MSW composting has a relatively high potential for producing an unmarketable product. Total project failure would ultimately result in the landfilling of a significant majority, if not all, of the composted MSW at the North Sea Landfill. In other words, the sole reliance on MSW composting could result in the failure by the Town to meet objectives intended by both the New York State hierarchy and responsible solid waste management.

7.3R ADVANTAGES OF SELECTIVE ORGANIC COMPOSTING

By separating organic material from the rest of the contaminating waste stream, Selective Organic Composting assures that the compost generated will be clean and marketable. Secondly, by increasing the potential marketability of the compost, Selective Organic Composting will minimize use of valuable landfill capacity. The proposed treatment of each of the identified waste streams and the potential environmental impacts of each are discussed below.

Leaf and Yard Waste

Leaf and yard wastes constitute a significant portion of the Town's total waste stream --- approximately 12 percent --- and can be readily collected as part of the source separation program (See Table 3R-7). This material can be easily composted in simple, low-cost unenclosed facilities, producing a relatively uncontaminated compost material which can be used in a wide variety of markets, (see Original SWAMP, Section 7.3.1.2). Usually these materials are piled into windrows or static piles on a composting pad, and periodically turned to aerate by a front-end loader. Temperature and moisture content are monitored on a regular basis. These materials degrade, and very little maintenance is typically required to keep the operation nuisance-free. The technology is well-documented and utilized reliably throughout the country. If odors create a problem, the process can be performed indoors. After composting which takes approximately 3 months, the compost can be screened and shredded prior to storage and shipment to the appropriate markets.

The Town of Southampton currently composts a portion of its leaf and yard wastes in a very elemental fashion, without any problem. Leaves remain in large piles and are turned once or twice per year. This system will, however, be upgraded and expanded. Leaf and yard wastes will be required to be source separated, and brought to the facility in biodegradable bags. The Outdoor Composting Area will be designed to process seasonal peaks of leaf and yard waste, by providing excess processing capacity as well as curing and storage areas. Source separated leaf and yard waste will be prepared for composting via mechanical processing. Such processing will include bag breakers, shredders, window turner, and other equipment as described in Section 6.0 and 7.0 of the Original SWAMP. While it is not anticipated that odors will be a problem, should they occur, the waste causing odor problems can be transferred indoors. From an environmental perspective, leaf and yard

waste composting conserves landfill space by a reliable, proven method, and produces a useful, marketable product. A small amount of runoff may be generated, and collected in drainage swales and discharged to a recharge basin. This runoff may be a source of process water for the composting operation. Any potential odor problems can be mitigated by monitoring of the piles and frequent aeration. No other adverse environmental impacts would be anticipated from such a facility.

Source-Separated Organics

Composting of other source-separated organic materials, such as food waste and soiled paper, also produces high quality compost. These organic materials comprise approximately 16 percent of Southampton's total waste stream. Due to the potential for odor problems, however, this material is usually composted indoors. Food waste and contaminated paper will be collected in biodegradable paper bags, and will be prepared for composting via mechanical processing. Such mechanical processing will include bag breakers, conveyors, shredders, trommels, and other equipment that may be necessary. The waste will then be formed into windrows and a windrow turner will be used to mix and aerate the material. Monitoring of moisture, temperature, oxygen and pH will be performed to maintain optimal conditions. The primary composting will take place within the Proposed Facility's Indoor Composting Area which is an enclosed structure adjacent to the Tipping Floor. The Indoor Composting Area will be designed to process the seasonal peaks of the Town's selective organic waste. It is anticipated that primary composting will be completed within six weeks. After primary composting, the material will be transferred to the Outdoor Organic Waste Curing Pad Area (Outdoor Curing Area) for subsequent curing. This curing should be completed within approximately six weeks. After curing, the compost product is transferred to the Outdoor Stockpile Storage Area (Outdoor Storage Area). Prior to marketing the compost will be screened and tested to determine if it meets compliance with the NYSDEC regulations and standard industry practices. Odor control will be a key consideration in this process, but proper management and monitoring of the windrows minimizes this potential problem. The environmental impacts associated with an enclosed windrow system will be minimal. Potential odor emissions will have the greatest negative impact, but will be mitigated by enclosure, frequent aeration, and if necessary an odor filtration system.

Based on a pilot study done for the Town of East Hampton, the concentration of toxic metals in the selective organics compost product is expected to fall well below NYSDEC allowable levels for Class I compost as shown in Table 7-1R. Markets for this high quality material should also be readily available.

Mixed MSW

The remaining MSW stream, now depleted of source separated recyclables, source separated organic materials and source separated leaf and yard wastes will be brought to the Tipping Floor of the proposed facility. This material will then be further processed for removal of additional and identifiable recyclable or organic materials. The remaining, or residual, waste will be landfilled during the peak season. However, during the off-peak season, when excess capacity is available within the source separated organics composting area, this MSW will be further processed and separately composted, as contemplated in the Original SWAMP. The MSW will be composted separately from the clean organics. While the Town is hopeful that this mixed waste stream can be successfully marketed, if it does not meet NYSDEC criteria, the material will be disposed of, or used as landfill cover.

Because of the improved marketability of the end-products of selective organics composting, this option will substantially reduce the risks inherent in sole reliance on the mixed MSW composting option as discussed in the Original SWAMP. At the same time, it is environmentally beneficial in that it provides for a maximum reduction in landfilling with no additional adverse impacts.

TABLE 7-1R

METAL CONCENTRATIONS

Metal	Maximum Allowable Concentrations[1] DEC Class I	DEC Class I	Compost Product from Source Separated Organics[2]
Mercury	10 ppm	10 ppm	1.3 ppm
Cadmium	10 ppm	25 ppm[3]	1.9 ppm
Nickel	200 ppm	200 ppm	24 ppm
Lead	250 ppm	1000 ppm[3]	153 ppm
Chromium (total)	1000 ppm	1000 ppm	34 ppm
Copper	1000 ppm	1000 ppm	72 ppm
Zinc	2500 ppm	2500 ppm	353 ppm
PCB's (total)	1.0 ppm	10 ppm[3]	N/A

Notes:

[1] Solid Waste Management Facilities, 6 NYCRR, Part 360, New York State Department of Environmental Conservation, December 31, 1988.

[2] Final Solid Waste Management Plan and Generic Environmental Impact Statement, Town of East Hampton, NY, Table 6.4.6-2, April 1992.

[3] These concentrations have been corrected in this Table. Concentrations listed on Table 7-3 of the Original SWAMP were incorrect.

8.0 RESIDUAL WASTE DISPOSAL

8.1 INTRODUCTION

Mixed waste processing alternatives described in previous sections of this report will probably always generate residual waste that requires some form of final disposal. Similarly, MRF facilities that process recyclables usually produce a reject stream that is not recycled. To handle this material, residual waste disposal alternatives may include off-Island transportation to a distant landfill, access to another Long Island landfill through a cooperative arrangement, or continuing residual disposal at the North Sea Landfill.

The landfill has been owned and operated since the 1960's by the Town. Figure 8-1 provides the regional setting of the Landfill site, which encompasses approximately 134 acres and is located southeast of the intersection of Major's Path and Old Fish Cove Road in the Hamlet of North Sea.

The Landfill was initially constructed in 1963 for the disposal of municipal solid wastes and septage (septic system wastes). The site includes one completed and one active landfill cell and a third cell that is currently under construction. The scavenger sludge lagoon area was closed in 1987. Plate I (in pocket) is a plan of the site showing existing and future available areas that may be used for solid waste management activities.

8.2 REGULATORY FRAMEWORK FOR LANDFILLING ON LONG ISLAND

Current solid waste regulations prohibit the landfilling of unprocessed solid waste in new or existing Long Island landfills after December 18, 1990. However, for landfills not within the deep flow recharge area, the Commissioner of the NYSDEC may approve landfilling of solid waste under certain conditions. The following paragraphs, quoted from 6 NYCRR Part 360-8.3 (the Long Island Landfill Law), are relevant subsections of the regulations.

"(d) (1) After December 18, 1990, the facility (except an expansion inside the deep recharge area) can accept solid waste and that waste must be limited to material that is the product of resource recovery, incineration, or composting and downtime waste and untreatable waste. However, downtime waste and untreatable waste may only be deposited in a special disposal area that is located and constructed so as to physically segregate these wastes and minimize their effects on residents of the surrounding area. Not more than ten percent of the annual rated capacity of a resource recovery facility may be disposed of as downtime waste per year. However, up to ten percent of the annual rated capacity of more than one resource recovery facility may be so disposed of at a single facility.

(2) If located outside the deep flow recharge area, an existing landfill, expansion, or new landfill also may accept solid waste after December 18, 1990 in addition to that described in paragraph one of this subdivision whenever that disposal is approved by the commissioner based upon the findings made after the opportunity for a public hearing that:

(i) no resource recovery facility is available to accept such waste;

(ii) the landfill's owner is making all reasonable efforts to implement a resource recovery system acceptable to the department; and

(iii) the landfilling of that waste will not have a significant adverse environmental impact.

In granting any such approval, the commissioner must impose conditions necessary to mitigate any adverse environmental impacts to the maximum extent practicable, and must impose a schedule under which the municipality must implement an acceptable resource recovery system."

Based on these regulations, it appears likely that the NYSDEC could approve the continued use of the Landfill after December 18, 1990 only if the Town were engaged in planning and implementing its resource recovery program in a manner satisfactory to the NYSDEC. As previously noted, residue from either a combustion or composting facility could be deposited in a Town landfill under these rules.

8.3 RESIDUAL DISPOSAL ALTERNATIVES

After the mixed waste has been processed, it is probable that a certain amount of residual waste will always remain to be handled by some

FIGURE 8-1

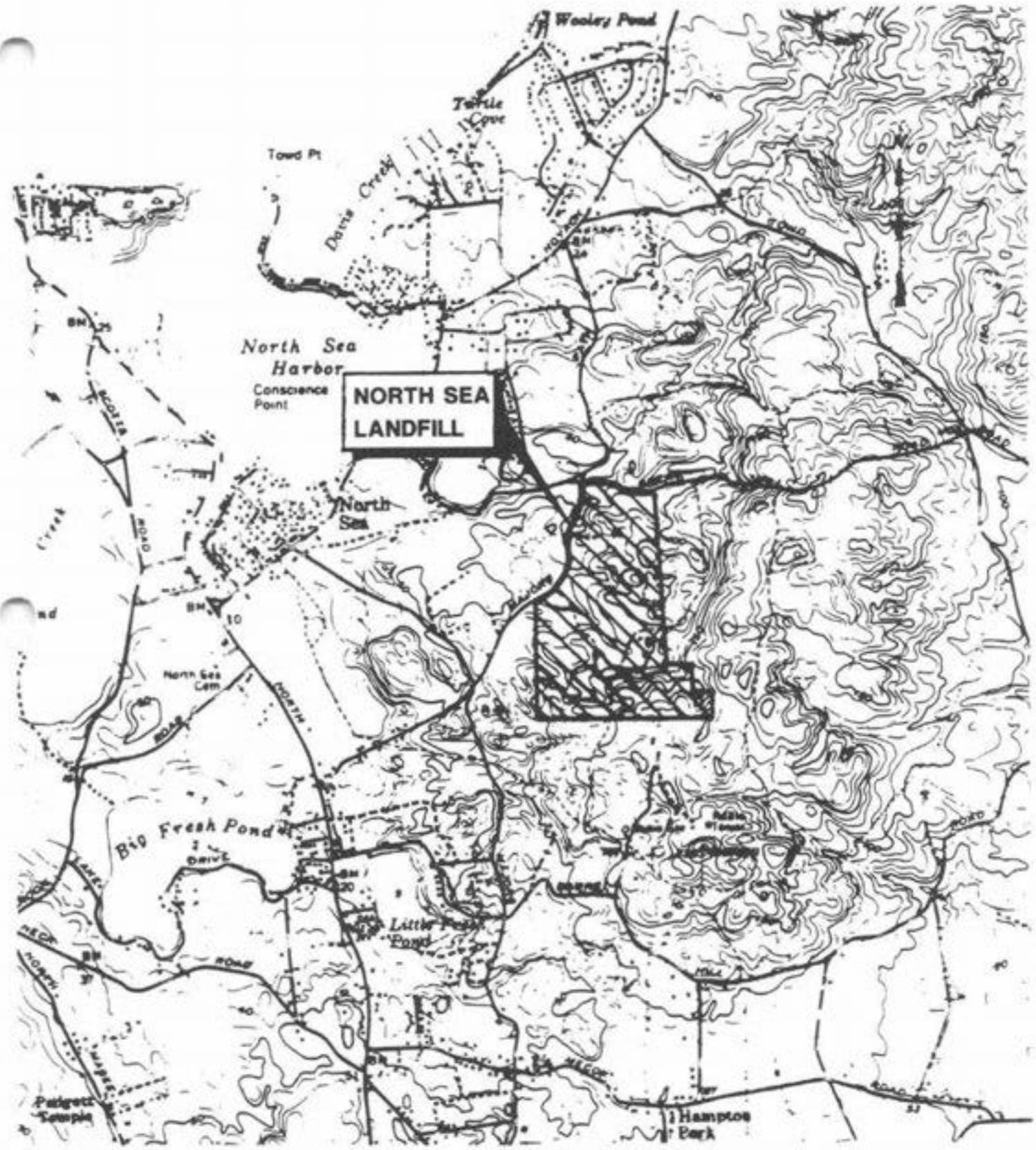

SOURCE: USGS 71/2 MINUTE SERIES

MALCOLM PIRNIE

TOWN OF SOUTHAMPTON
SOLID WASTE ACTION MANAGEMENT PLAN

NORTH SEA LANDFILL REGIONAL PLAN

SCALE: 1" = 2000'

method of disposal. As mentioned above, the three residual disposal alternatives that could potentially be considered are: 1) off- Island disposal; 2) disposal at another Long Island landfill, if some cooperative arrangement could be made on a long-term basis; and 3) disposal at the Landfill.

Off-Island disposal would require truck or rail haul of residual waste out of the region at very high annual costs, which are likely to increase with time. Contracted charges for 1989 for the Towns of Hempstead and Oyster Bay exceeded $100 per ton for transport to and disposal in Pennsylvania and Massachusetts; considering only the additional highway hauling cost, similar contract charges could approach $115-$120 per ton (1989 dollars) or more in Southampton. Additionally, this disposal method may result in adverse environmental impacts depending upon the mode of transportation and the ultimate disposal location.

While the Town is currently exploring some possibilities for short-term or intermittent regional cooperation with regard to landfilling, it does not appear that this could become a long-term solution.

State-of-the-art technology associated with developing landfills and preventing adverse environmental effects has significantly improved over the past several years. Adverse impacts associated with older landfills are mitigated by designs which address landfill gas and leachate control, surface water management, and other aspects. Similar to Cell No. 3, which is now under construction, future cells at the Landfill for residual waste disposal would require multi-composite lining, leachate collection and detection, and landfill gas control if appropriate, all in accordance with current stringent Part 360 regulations.

In 1989, the low bid for construction of Cell No. 3 was about $4,800,000. Considering construction and the additional costs to operate the Landfill until it is completed, to perform final closure, and to maintain and monitor the Landfill for 30 years in accordance with current regulations, the current value of disposal in Cell No. 3 is likely to be in the $45-$55 per ton range in 1989 dollars. This amount represents a lower limit of future Landfill costs.

With the exception of minor impacts to on-site vegetation, potential adverse impacts are considered manageable with these state-of-the-

art technologies that will be utilized, and the development of future cells at the Landfill site is considered economically favorable and environmentally feasible, subject to further detailed analysis at the time of development.

8.4 RESIDUAL WASTE QUANTITIES AND COMPOSITION

Candidate waste handling systems have been previously presented in Sections 6.9, Processing Technologies, and 7.4, Candidate Options, of this report. These candidate technologies each continuously produce at least one residual waste stream, and may, on occasion, produce additional residual streams. These residuals will require disposal and may be landfilled in accordance with current regulations on Long Island.

In addition, each process will likely experience annually scheduled downtime for major system maintenance, process modifications and similar work. Further, unscheduled downtime may occur as a result of equipment or process upsets. Both types of system downtime will result in the need to redirect unprocessed waste from processing to alternative disposal on an occasional basis, regardless of the technology chosen.

In addition, it can be expected that a certain amount of unprocessible waste will be delivered to any processing facility. The specific components of this unprocessible fraction depends on the process being used, but may include, for example, household hazardous waste, used batteries, used motor oil, used tires, or other similar items. These wastes will result in the need to redirect unprocessible wastes to other processing or recycling facilities, or to alternative disposal.

While the quantity of process residue varies, as discussed in Section 5.0, the range of anticipated residual waste quantities from candidate systems has been assumed as follows:

Compost Options:

Picked and screened rejects, downtime bypass and unprocessible waste from a combination of source separated materials processing and MSW composting or co-composting:

Residual waste .....30-40% of incoming waste by weight depending on by-pass quantities

Thermal Options:

Picked rejects, ash, downtime bypass, and unprocessible waste from a combination of source separated materials processing and waste distillation or waste-to-energy:

Residual waste .....30-40% of incoming waste by weight depending on bypass

After a processing facility is constructed, some delay can be anticipated before the facility reaches full operation, especially for certain systems. This delay could result from the gradual development of public participation in a source separation program or development time to establish compost or other materials market credibility. Similarly, construction times for various facilities are different, with thermal process facilities requiring a relatively longer construction period and a shorter period between completion of construction and full scale operation, while mechanical processes have short construction periods, but may require a longer period to achieve full market acceptance of the product. Theoretical schedules for these two types of facilities are summarized in Table 8-1.

Therefore, it has been assumed that a range of between less than one and nearly three years represents the "ramp up" time to achieve full operation in any facility, and that landfilling rates during this period may vary.

Table 8-2 illustrates the annual quantities of residual waste requiring disposal over a 25-year period. For any scenario, the major changes in quantities occur when the mixed waste processing facility completes shakedown, when it achieves full-scale commercial operation, when full market acceptance of the products is achieved, and when the source separation program reaches full implementation. Dates on which these events could occur for the two scenarios in Table 8-2 are presented in Table 8-1.

In Table 8-2, the columns labelled "High Residuals Disposal Requirements" assumes an estimated high flow of residuals to the landfill based on assumptions of a source separation program that achieves 25 percent total capture, and a mixed waste processing facility that produces

residuals at 40 percent of incoming waste as shown in Figure 5-1. The column labelled "Low Residuals Disposal Requirements" presents estimates of low flow of residuals that would go to the landfill assuming source separation achieves 40 percent total capture and mixed waste processing yields residuals at 30 percent of arriving waste.

If residual wastes are landfilled in a dedicated, single-material landfill, the quality of the leachate that would be generated by each can be reasonably predictable. Leachate would be collected by a double liner system and piped to a storage tank or on-site pre-treatment system. As reported in the literature, the approximate leachate characteristics expected for the various process residuals are summarized in Table 8-3.

8.5 NORTH SEA LANDFILL SITE CONDITIONS

8.5.1 Status

On April 13, 1989, a permit for the construction of Cell No. 3 was issued to the Town. Cell No. 2 is currently active, but will be closed on or before October 1, 1989. After October, Cell No. 3 will begin to receive waste.

8.5.2 Current Capacity

Cell No. 3 is currently under construction and will be excavated to approximately Elevation of 50 feet above sea level with 3:1 side slopes. The capacity of Cell No. 3 will be about 423,000 cy and, if landfilling were to continue at current rates, about 42 months of life could be expected. However, the cell would have an expected life of 50 to 65 months based on the assumptions that the density of the in-place waste will be about 1300 pounds per cubic yard, and that recycling programs will divert about 25 to 40 percent of the waste stream by 1997, as illustrated in Table 8-2.

The available volume was computed using the equation for the frustum of a cone, as follows:

$$V = 1/3\ h\ (A_1 + A_2 + \sqrt{A_1\ A_2})$$

Areas used were 10 foot contour intervals, based on a conceptual top-of-liner base plan and a conceptual final closure plan. The landfill

TABLE 8-1

PROBABLE PROJECT SCHEDULES FOR
MIXED WASTE PROCESSING FACILITIES

	Composting	Thermal
Complete system planning	Jan 1990	Jan 1990
Commence construction	June-Oct 1990	Oct 1990-Jan 1991
Complete construction	Jan-July 1992	April-Sept 1993
Shakedown	Mar-Sept 1992	Aug-Dec 1993
Full-scale commercial operation	April-Oct 1992	Oct 1993-Jan 1994
Achieve full market acceptance	April 1995	Oct 1993-Jan 1994
Full implementation of source separation program	December 1997	December 1997

Source: Malcolm Pirnie estimates

MALCOLM PIRNIE

TABLE 8-2

PROJECTED RESIDUALS DISPOSAL SCENARIOS

Year	Waste tpd	Waste tpy	High Residuals Disposal Requirements[2] tpy	High Residuals Disposal Requirements[2] tpd	Low Residuals Disposal Requirements tpy	Low Residuals Disposal Requirements tpd
1988[1]	186	68,000				
1989	176	64,400	66,400	182	64,900	178
1990	191	69,800	66,100	181	63,000	172
1991	193	70,500	65,700	180	60,000	164
1992	195	71,200	64,200	176	58,000	159
1993	196	71,600	45,600	125	56,000	153
1994	198	72,100	28,900	79	16,000	44
1995	187	68,400	27,400	75	15,300	42
1996	187	68,400	27,400	75	14,600	40
1997	182	66,700	26,700	73	14,200	39
1998	185	67,600	27,000	74	14,200	39
1999	187	68,400	27,400	75	14,600	40
2000	190	69,400	27,800	76	14,600	40
2001	193	70,300	28,100	77	15,000	41
2002	195	71,200	28,500	78	15,000	41
2003	198	72,100	28,400	79	15,300	42
2004	200	73,100	29,200	80	15,700	43
2005	203	74,000	29,400	81	15,700	43
2006	203	74,000	29,600	81	15,700	43
2007	203	74,000	29,800	81	16,100	44
2008	204	74,400	30,000	82	16,100	44
2009	208	75,800	30,300	83	16,400	45
2010	210	76,700	30,700	84	16,800	46
2011	213	77,600	31,000	85	17,200	47
2012	218	79,400	31,800	87	17,200	47
2013	220	80,300	32,100	88	17,500	48
2014	223	81,300	32,500	89	17,500	48
2015	225	82,200	32,900	90	17,900	49

Note:

1. Base year is 1988.

2. Uniform annual increase to 25% total source separation capture by 1997, with ramp up to full scale compost operation from October 1992 to April 1995, thereafter producing 40% residual waste. This projection represents an estimated high flow of residuals to disposal.

3. Uniform annual increase to 40% total source separation capture by 1997 with construction and full scale commercial operation in January 1994, thereafter producing 30% residual waste. This projection represents an estimated low flow of residuals to disposal.

Source: Figure 5-1, and Table 8-1.

TABLE 8-3

TYPICAL LEACHATE QUALITY VALUES
(milligrams per litter)

Leachate Parameter	Westchester Combined Ash Residue Leachate[1] Range of Values	Typical Sanitary Landfill Leachate[2] Range of Values	Typical Co-Compost Leachate[3]
pH	10.2 - 10.6		7.39
TDS	3090 - 15,900	1,000 - 10,000	NR
TSS	2 - 30	100 - 400	NR
Alkalinity, as $CaCO_3$	55 - 178	500 - 6,000	2,215
BOD_5	31 - 250	2,000 - 15,000	208
COD	102 - 487	5,000 - 40,000	6,588
TOC	25 - 152	1,000 - 10,000	NR
Aluminum	0.4 - 1.5	NR	NR
Arsenic	<0.005	<0.002 - 0.03	NR
Barium	<0.2	ND - 1.1	NR
Cadmium	0.01 - 0.05	<0.05 - 0.1	0.01
Chromium, total	<0.01 - 0.12	ND - 0.08	0.22
Chromium, hexavalent	NR	NR	NR
Copper	0.25 - 0.64	ND - 9.0	NR
Iron	0.04 - 0.10	10 - 1,000	NR
Lead	<0.05 - 0.13	0.02 - 1.0	0.33
Magnesium	0.8 - 1.52	100 - 500	NR
Manganese	<0.01 - 0.02	0.1 - 50	NR
Mercury	<0.005	NR	NR
Nickel	0.06 - 0.14	0.1 - 0.8	NR
Selenium	<0.005 - 0.009	NR	NR
Silver	<0.02	NR	NR
Zinc	0.006 - 0.031	0.5 - 135	1.45
Calcium	87 - 105	60 - 2,500	NR
Chloride	163 - 5,100	100 - 2,400	NR
Potassium	70 - 835	50 - 1,000	NR
Sodium	155 - 3,360	100 - 4,000	NR
Sulfate	1,760 - 4,330	25 - 500	NR

Notes:
ND = Not Detectable
NR = Not Reported
(1) Cundari and Lauria, 1986.
(2) Compilation of data from following:
A - Chian and De Walle, "Sanitary Landfill Leachates and Their Treatment," ASCE, April 1976.
B - Thorton and Blane, "Leachate Treatment by Coagulation and Precipitation," JASCE, Aug. 1973.
C - Boyle and Ham, "Biological Treatability of Landfill Leachate," JWPCF, Vol. 46, No. 5, May 1974.
(3) Diaz, et al, 1977.

life was estimated using waste quantities presented in Table 8-2 that represent material arriving for disposal. These quantities were derived from total waste by subtracting the estimated recyclables that would be diverted due to source separation. As discussed in Section 5, and shown in Figure 5-1, the range of the total capture of selected recyclables is between 25 percent and 40 percent of total waste stream, after full implementation of a source separation program. A uniformly increasing recycling "ramps up" to 40 percent of total capture was used from 1989 to the startup of an assumed mixed waste processing facility.

The 65-month life of No. 3 Cell will be exhausted by mid 1995 while the landfill would be exhausted by mid 1994 if only 55 months of life could be obtained. While the Long Island Landfill Law prohibits landfilling of raw MSW, as discussed in Section 8.2, Regulatory Framework for Landfilling in Long Island, it is anticipated that the Commissioner of the NYSDEC could act to permit continued use of Cell No. 3, if alterantive recycling and processing facilities are under development as planned.

As discussed in Section 8.4, Residual Waste Quantities and Composition, residuals requiring disposal could range between 30 and 40 percent of the total waste stream, and full-scale operation could take from two to four years after start of construction. Based on the two likely alternative project schedules summarized in Table 8-2, landfill disposal of unprocessed MSW could be accommodated in Cell 3 until completion of a mixed waste processing facility, and about two years of landfilling facility residuals could also be handled.

8.5.3 Site Facilities

Improvements at the Landfill site have included specialized facilities such as ground water monitoring wells, landfill gas monitoring system, leachate collection system, maintenance buildings, scales and scalehouse, and others to support on-going landfill activities. Since the late 1970's, numerous on-site ground water monitoring wells have been installed and monitored, so that site hydrogeology is well defined and continues to be monitored.

As part of Cell No. 3 construction, a 275,000-gallon leachate storage tank is being built. This tank will serve Cells No. 2 and No. 3, and will store leachate prior to shipment off site for treatment at a licensed facility or alternatively for its use for water make up in a compost facility.

A site perimeter gas monitoring well system is to be installed, with wells located 10 feet from the property line, 200 feet to 400 feet apart, and between 30 and 60 feet deep. Additional wells are to be located 10 feet east of the existing weigh station and office trailer. Along with these wells, methane gas detection is to be provided inside the structure, which will alarm before the explosive limit of methane could be reached.

When Cell No. 3 reaches its final capacity in 1994 or 1995, it will be closed. A landfill cap composed of synthetic and natural layers will be used for final closure, and the final elevation of Cell No. 3 may be about Elevation 140 msl.

8.6 POTENTIAL NORTH SEA LANDFILL DEVELOPMENT

Nearly 100 acres of uncommitted area on the Town-owned Landfill site could support future additional landfill or other solid waste management activities. Plate I (in pocket) is an overall plan of the site and indicates the areas that are potentially available for development of future solid waste management facilities, after consideration of required buffer zones. Existing on-site improvements, as discussed in Section 8.5.3, Site Facilities, could also serve other landfill cells or other processing facilities.

As an example of the logical future development of the site, the possibility of future expansion to the south of Cell No. 3 has been investigated. Two future cells, designated Cells No. 4 and No. 5, could be built to the south of Cell No. 3, as shown on Figure 8-2 assuming that the sludge lagoon issue can be satisfactorily resolved with EPA. As required by current Part 360 regulations, a 100-foot buffer to property lines would be used. Existing grades slope from about Elevation 170 msl near the southeast corner of the site to about EL 100 to 110 feet near Cell No. 3. Between Cell No. 3 and proposed future Cell No. 4, a road

FIGURE

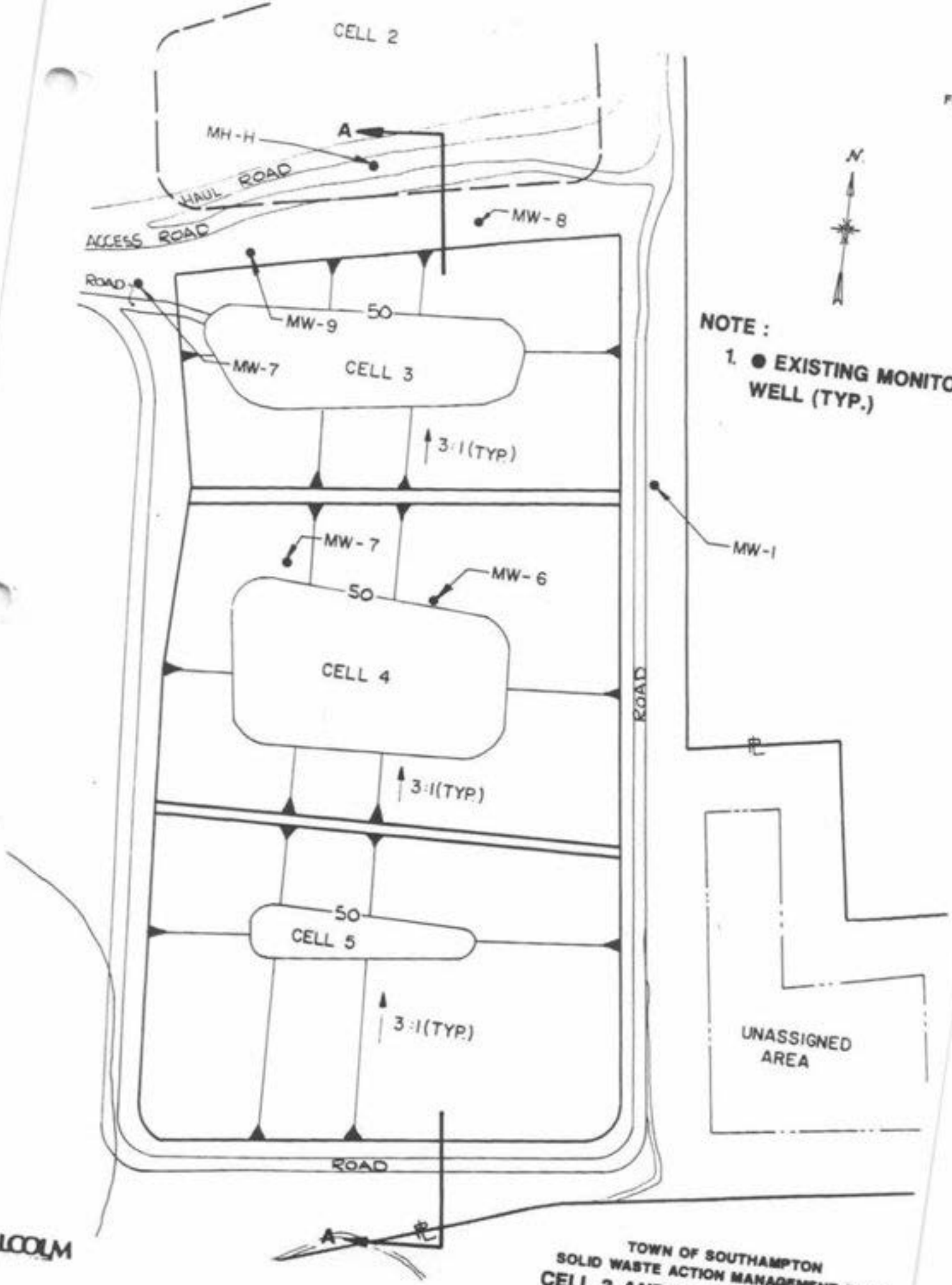

MALCOLM

TOWN OF SOUTHAMPTON
SOLID WASTE ACTION MANAGEMENT PLAN
CELL 3 AND FUTURE CELLS 4 & 5
TOP OF LINER PLAN

about 20 feet wide could be built. Cells No. 4 and No. 5 could be separated by a low berm at about Elevation 90 msl. It is assumed that both cells can be excavated to a top-of-liner elevation of about 50 msl.

The capacities of proposed future Cells No. 4 and No. 5 are about 1,000,000 cy and 1,800,000 cy, respectively, based on a closure plan illustrated in Figure 8-3. Cell No. 4 has an expected life of about 21 years and Cell No. 5 has an expected life of about 32 years, based on waste quantities discussed in Section 8.4, Residual Waste Quantities and Composition.

Cell No. 4 will be closed adjacent to and over the previously closed Cell No. 3 and will reach to about Elevation 175 msl. Cell No. 5 will be closed continuously with Cells No. 3 and No. 4, with final grades reaching to about Elevation 180 msl. Estimates of landfill capacity were based on the assumption of a 3-foot synthetic cap for all cells, a 3:1 side slope over all cells, 40 percent residue remaining after mixed waste processing, and the site configuration in Figures 8-2 and 8-3.

Although the current 100-foot buffer design is adequate for current Part 360 regulations, it may be appropriate to acquire more buffer area, particularily to the east of the landfill site, while this land is still vacant and at a relatively reasonable market value. Expanding the buffer could help mitigate problems that could arise when more homes are built in the area. If a regional alternative is chosen, it is possible that future cells of the North Sea Landfill will be used for ash residue disposal. Under this scenario, the filling sequences, configurations, and capacities outlined above would be revised accordingly. The evaluation of the regional approach would consider the technical and environmental issues regarding residuals disposal at North Sea.

Leachate would continue to be collected from older cells, but will diminish rapidly in volume once the cells are capped. Thus, existing storage facilities could be used for leachate from new cells.

8.7 CONCLUSION

Assuming an aggressive recycling scenario and the prompt construction of a new mixed waste processing facility, the Landfill site could

potentially provide an additional 50 years of life, regardless of the mixed waste processing scenario selected for implementation, subject to DEC approval and the ability to construct the cells shown on Figure 8-2. This potentially long life represents a potentially significant and valuable resource to the Town, and offers the possibility of providing economically and environmentally sound residue disposal into the foreseeable future. This advantage to the management of solid waste in Southampton has several implications, the most important of which is that the selection of a mixed waste processing technology is not limited by potential landfill availability or capacity, for its residue, and there could be considerable flexibility available (if needed) to allow a process, such as composting, time to develop the necessary long-term markets needed to support a decision to proceed in this direction.

It is important to note that the future development of the site as suggested in this section is dependent upon resolving the sludge lagoon area and regional facility ashfill questions, and the concurrence of the DEC with this design concept.

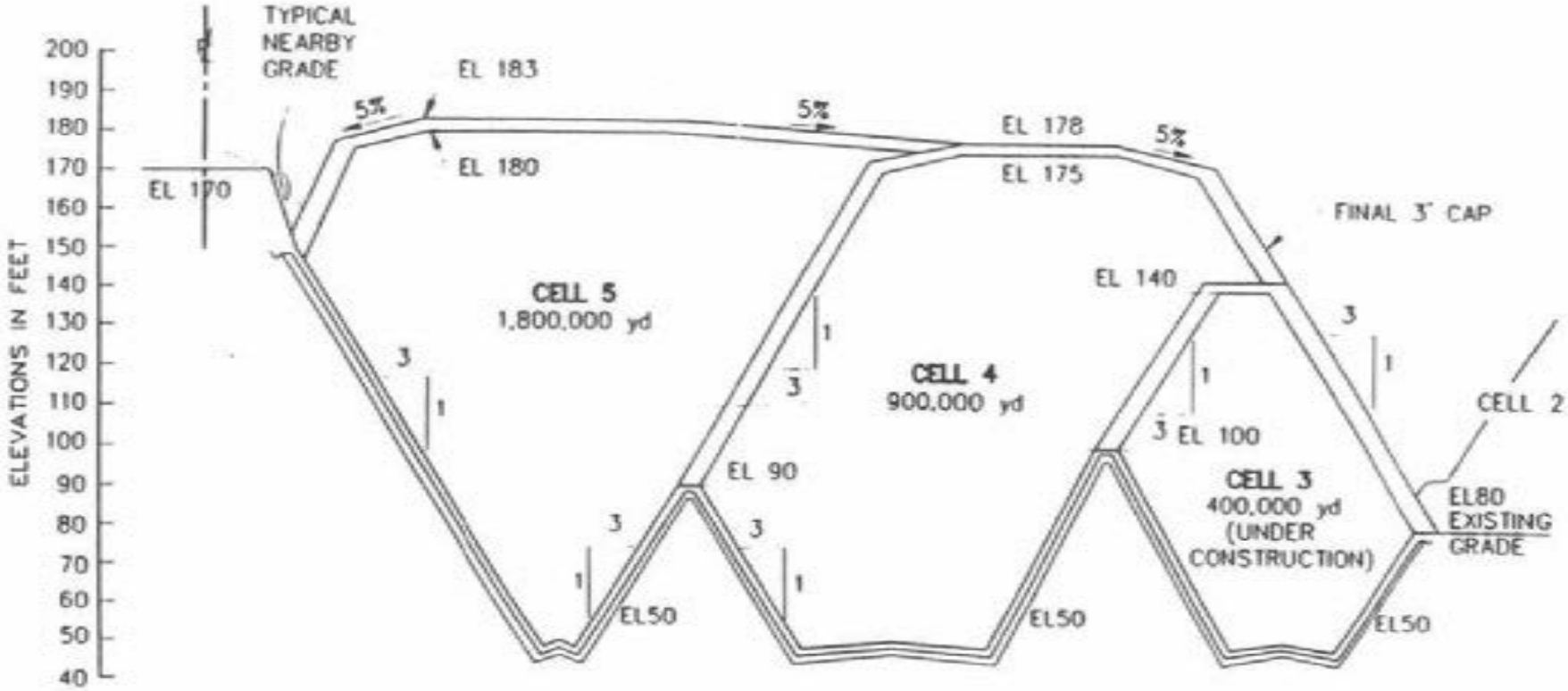

SECTION A–A

MALCOLM PIRNIE

TOWN OF SOUTHAMPTON
NORTH SEA LANDFILL

CELLS 3,4 & 5

HORIZONTAL SCALE: 1"=200'
VERTICAL SCALE: 1"=40'

FIGURE 8-3

8.0R RESIDUAL WASTE DISPOSAL

Cell No. 3 of the North Sea Landfill was initially granted an operating permit from NYSDEC on December 8, 1989. That permit was renewed in December, 1990 after the NYSDEC confirmed that operation of Cell No. 3 resulted in no significant adverse environmental impacts.

Table 8-1R shows the amount of material projected to be landfilled once Southampton's reuse, recycling and composting plan is in place. These quantities are based on the estimated quantities of recyclables and estimated recovery rates discussed in the Chapter Revisions for Chapter 3. As shown by these projections, only 35 percent of the current amount of waste entering the landfill will be landfilled in the year 2010.

The Town of Southampton has submitted a renewal petition to the NYSDEC on June 30, 1992, in order to continue landfilling at Cell No. 3 past January 1, 1993. The Town hopes that the renewal will be granted based on the significant impact the Town has already made on reducing waste quantities going to the landfill due to aggressive source-separation and recycling, as well as the projected impact as a result of the plan outlined in this Revised SWAMP.

TABLE 8-1R

TOWN OF SOUTHAMPTON
PROJECTED LANDFILL DISPOSAL REQUIREMENTS

YEAR	REMAINING MIXED WASTE (1) (TONS)	REMAINING MIXED WASTE (1) (TPD)	RESIDUE FROM COMPOSTING (2) (TONS)	RESIDUE FROM COMPOSTING (2) (TPD)	TOTAL MATERIAL LANDFILLED (TONS)	TOTAL MATERIAL LANDFILLED (TPD)
1991	66,310	182	0	0	66,310	182
1992	57,372	157	0	0	57,372	157
1993	48,380	133	0	0	48,380	133
1994	41,733	114	0	0	41,733	114
1995	23,531	64	8,234	23	31,765	87
1996	22,027	60	6,794	19	28,821	79
1997	20,865	57	5,339	15	26,204	72
1998	20,691	57	4,719	13	25,410	70
1999	20,662	57	4,345	12	25,007	69
2000	20,644	57	3,949	11	24,593	67
2001	20,710	57	3,720	10	24,430	67
2002	20,768	57	3,481	10	24,249	66
2003	20,820	57	3,342	9	24,162	66
2004	20,872	57	3,201	9	24,073	66
2005	20,934	57	3,060	8	23,994	66
2006	20,962	57	2,923	8	23,885	65
2007	20,993	58	2,782	8	23,775	65
2008	21,015	58	2,640	7	23,655	65
2009	21,029	58	2,495	7	23,524	64
2010	21,037	58	2,347	6	23,384	64

NOTES (1) Includes all mixed waste that has been preprocessed but not composted due to the lack of excess capacity at the indoor selective organic composting facility.

(2) Includes all residue from the composting operations at the Town's proposed integrated solid waste management facility.

9.0 CANDIDATE OPTIONS ANALYSIS AND RECOMMENDATIONS

9.1 RECYCLING PROGRAM RECOMMENDATIONS

Source separation recycling has been identified as an integral part of the long-term solid waste management program for the Town. The Town is committed to implementing an improved and expanded source separation program with the goal of attaining maximum feasible recycling. A comprehensive municipal source separation recycling program must address the following program elements:

- Program Administration
- Commercial Sector Recycling
- Waste Reduction
- Public Participation
- Collection Systems
- Materials Marketing
- Processing Technologies.

If any one of these program elements is not properly addressed, the recycling program could suffer since each is an integral part of the whole program that is necessary for the program to be successful.

Each of these program elements was analyzed in Section 6.0. This program Section highlights that discussion as a basis for the recommendation of the preferred actions that can be undertaken now and long-term options available to the Town. Table 9-1 lists the preferred short-term courses of action for each program element, and long-term options.

PROGRAM ADMINISTRATION

Several different administrative implementation arrangements could be pursued for the various elements of the long-term recycling program. As discussed in Section 6.3, each arrangement has certain advantages that the other arrangements do not have. It should be noted that the implementation plan outlined below is what is currently considered the most favorable approach, but modifications and flexibility to adjust to actual conditions must be an integral part of the program.

Short-Term Southampton Activities: For the near-term, the Town will continue to improve its own program. Improvements can be concentrated in areas for which Southampton is likely to remain primarily responsible after cooperative efforts are implemented and in areas that have favorable short-term impacts. These areas include:

- drop-off centers
- curbside/backyard collection practices
- mandatory separation laws and enforcement
- enhancing commercial/institutional recycling efforts
- separated organics composting
- short-term materials marketing
- promotion of local recycling efforts.

These activities undertaken independently by Southampton should not conflict significantly with any of the cooperative initiatives underway. By improving its program during the near term, the Town will continue to increase the waste quantities diverted, and thus increase avoided cost savings, while cooperative efforts are being implemented.

Concurrently with Town program improvements, the Town will continue to work with neighboring towns for implementing regional approaches for various program elements.

E2RA: Southampton will continue to work with the other East End Towns towards the formation of a fully implemented East End Recycling Association with clearly defined roles. The E2RA will be responsible for those activities which economy of scale effects will result is significant cost savings and other benefits such as improved promotion and materials marketing for all of the Towns. Suggested roles include:

- Regional promotion/education activities. This role is already being implemented through the program described in the LRRRP grant application.

- Assess the feasibility of procurement of a regional MRF for processing source separated newspaper, cardboard, office paper, cans, container glass, plastics and potentially other materials in the future.

- Materials marketing cooperative duties if a Suffolk County towns cooperative is not implemented.

TABLE 9-1
SOURCE SEPARATION RECYCLING PROGRAM RECOMMENDATIONS

Program Elements	Short-Term Action Items	Long-Term Options
Administrative	1. Improve Town's recycling program. 2. Participate in the development of E2RA. 3. Investigate utilizing Brookhavens' MRF as a short-term alternative. 4. Participate in Suffolk County Towns Marketing Cooperative. 5. Cooperate with Suffolk County recycling coordinator. 6. Investigate means for involving private enterprise in recycling activities.	1. Continued cooperation and participation with private enterprise and government entities. 2. The Town undertakes all activities. 3. Complete regional control. 4. Recycling expansion left to private enterprise.
Waste Reduction	1. Continue to monitor State, Federal and regional initiatives 2. Participate in appropriate initiatives	1. E2RA or the Town implements educational programs for consumers, businesses, homeowners and schools. 2. Town enacts legislative measures to encourage waste reduction.

TABLE 9-1 (Continued)
SOURCE SEPARATION RECYCLING PROGRAM RECOMMENDATIONS

Program Elements	Short-Term Action Items	Long-Term Options
Commercial/Industrial Industrial Strategies	1. Enact mandatory source separation ordinance for corrugated cardboard and office paper. Law for other materials applies to all waste generators. 2. Enter into discussions with the private haulers to arrange for pick-up of source separated commercial recyclables. 3. Encourage private recycling activities. 4. Provide an outlet for commercial recyclables not marketed privately.	1. Take commercial recyclables not marketed privately for processing in a MRF. 2. Implement technical assistance programs to encourage private businesses to recycle.
Public Participation	1. Town promotion and education with assistance from E2RA coordinator program. 2. Broaden and enforce mandatory participation laws. 3. Establish favorable garbage/recyclables tipping fee differentials.	1. Town and E2RA share promotion and education responsibilities. 2. E2RA assumes all responsibility for promotion and education activities. 3. Town retains responsibility for promotion and education activities.

TABLE 9-1 (Continued)
SOURCE SEPARATION RECYCLING PROGRAM RECOMMENDATIONS

Program Elements	Short-Term Action Items	Long-Term Options
Collection Systems	1. Town oversees collection of source separated recyclables using existing collection system. 2. Town will improve drop-off facilities.	1. Utilize private firms for special collection services of recyclables. 2. Provide Town or E2RA owned and operated fleet of special recycling vehicles.
Processing Technologies	1. Continue C&D recycling by private enterprise. 2. Ship unprocessed source separated recyclables to market. 3. Consider utilizing a merchant MRF or Brookhaven's MRF. 4. Initiate a pilot leaf and yard waste compost program. 5. Determine the probable quantity projections and role of E2RA in developing a MRF.	1. In cooperation with E2RA, implement regional MRF supplemented by a Town composting facility. 2. Alternatively, implement Town processing facilities, including a Town MRF. 3. Ship recyclables to market directly or to a MRF in another town.
Materials Marketing	1. Request that the E2RA coordinator investigate 1989 Phase II markets or appoint a municipal employee to investigate available markets.	1. Market materials through E2RA. 2. Suffolk County Towns marketing cooperative plays a larger role.

TABLE 9-1 (Continued)
SOURCE SEPARATION RECYCLING PROGRAM RECOMMENDATIONS

Program Elements	Short-Term Action Items	Long-Term Options
Materials Marketing (cont'd)	2. Pursue output contracts or spot market sales, dependent upon market conditions.	3. MRF operator assumes a major role.

The organization of a formal effort by E2RA to undertake activities such as a Regional MRF is significant, and will require the formulation of an inter municipal understanding as to how the responsibilities and costs are shared similar to the LRRRP grant.

Brookhaven: The Town will continue to explore the potential Brookhaven composting, recycling and waste conversion proposal for sorting, processing and marketing commingled cans, glass containers, plastics, paper and possibly other mixed wastes generated in Southampton (and possibly the other East End Towns). This type of intermunicipal arrangement could be a particularly advantageous alternative to procurement of an E2RA MRF.

Suffolk County Towns Marketing Cooperative: The Town will seek to participate in the CO-OP if fully implemented. A cooperative should improve market position in terms of market availability and revenues. A CO-OP is also an advantage given the "geographic isolation" relative to markets shared by the Suffolk County towns.

Suffolk County Recycling Coordinator: The Town will maintain open channels of communication with the County Recycling coordinator particularly for market development initiatives.

Private Enterprise: The Town and any cooperative recycling associations it is involved in should define appropriate measures that can be taken to spur private enterprise (no action alternative) involvement in recycling. Private enterprise will accept commodity markets risks in exchange for profit opportunity. On the other hand, the Town should not leave all recycling activities to private enterprise since the improbability of profit making in many recycling activities means that little waste will be diverted by private enterprise alone. It pays for the Town to be directly involved in recycling activities which are not directly profitable, but where the avoided cost of disposal is greater than the cost to recycle as outlined in NYS GML 120-aa.

Private enterprise could be engaged in the following areas:

- commercial/institutional and industrial waste recycling
- C&D processing
- source separated materials collection
- materials marketing
- MRF construction, and operation

The Town can engage private enterprise with several devices including: public laws for mandating recycling of certain materials and materials disposal bans, RFPs structured for private enterprise initiative and education of businesses as to recycling opportunities.

WASTE REDUCTION

Waste reduction is the preferred method of waste management. Any waste reduction will result in total disposal cost avoidance and many reduction activities result in increased efficency and overall cost savings. Waste reduction is effected by changes in the habits and attitudes of the public regarding waste generation. Government can act to stimulate waste reduction by the public and implement reduction in its own activities.

New federal, state and regional initiatives may have a significant impact in the future. The Town will continue to monitor these new initiatives. It may be possible that the Town can elect to participate in some of them or can adapt them to local use. It is also necessary to avoid conflicts between the Town's programs and Federal action.

The Town and/or E2RA may develop and implement their own waste reduction educational and legislative measures. However, the effectiveness and collateral impacts of specific actions is uncertain and the Town will carefully consider these implications when contemplating any new waste reduction initiatives.

COMMERCIAL SECTOR RECYCLING

Recycling activities for commercially generated materials will be developed both in parallel with the residential recycling program and through special efforts unique to commercial recycling. Parallel

developments may include mandatory recycling laws applicable to all waste generators, collection by the private haulers, taking recyclables collected from both sources at the Town drop-off centers and possibly the processing of commercially generated materials at a MRF. These activities are described in more detail elsewhere in this Section along with residential recycling efforts.

Additionally, the Town intends to encourage establishments within the commercial sector to implement their own recycling programs. The Town intends to provide technical assistance for in-house program development, employee education and markets identification. This method allows commercial establishments to employ traditional business contacts and secondary markets in developing the programs. Individual establishments will have the opportunity to benefit from potential recycling revenues generated by their own recycling efforts as well as expanded and additional recycling programs encouraged by the Town.

PUBLIC PARTICIPATION

The Town can increase public participation rates with three techniques typically used in municipal recycling programs:

- promotion and education,
- mandatory participation laws, and
- preferential recyclables tipping fees.

These devices will be used with residential and commercial/institutional recycling initiatives.

The Town will work closely with the E2RA to coordinate its local promotional activities with promotional programs undertaken by E2RA. For the short-term, the Town may develop planned public awareness programs. Media campaigns, direct mailing and school projects can be the primary elements in this program. Community leaders will be engaged to support and promote the Town recycling program.

The Town will further amend its mandatory source separation ordinance at appropriate times to include other recyclables for which economic markets exist. If participation rates are low, the Town will enforce the law at the curb and landfill to maintain steady participation.

As an additional incentive to recycle and to reasonably reflect the higher cost of disposal resulting from the construction of new disposal capacity, the Town will maintain and enhance a tipping fee differential between wastes and recyclables and will consider a pay by the container fee structure for self-haulers. Recyclables drop-off will continue to be free.

COLLECTION SYSTEMS

The Town established the basic framework for the collection of residential and commercial/institutional materials during implementation of the 1989 Recycling Plan. This framework consists of drop-off centers for self-haulers at the existing transfer stations and the landfill and curbside collection service provided to residents who receive regular garbage collection. Improvements will focus on the Town's drop-off centers and market haul activities and on adding more materials for curbside collection.

The planned bi-level drop-off center for the North Sea Landfill will improve residential and hauler recyclables drop-off and the efficiency of market haul. Bi-level drop-off centers will be considered for the other recycling centers (the transfer stations) where large quantities are collected. Over time, the Town will also establish smaller satellite centers at beaches and parks for recyclables that are commonly generated at those locations and possibly other locations through-out the Town where convenient for residents.

The Town may need to modify its collection approach in the future to match processing or marketing requirements. Also, depending on continued cooperation of the private haulers and participation rates, E2RA or the Town may need to establish a separate recyclables collection service with specialized recycling trucks.

Collection of separated organics is currently accomplished by a combination of separate drop-off at the organics stock pile at the Landfill and seasonal curbside collection by the Town highway department. This system has been fairly successful in diverting significant quantities of organics from disposal in the Landfill but may need to be modified and

coordinated with the yard waste compost program. More organic wastes is available in the waste stream and can be diverted. To accomplish, this improved techniques for gaining public participation need to be applied as well as possible changes in the existing collection system. See recommendations for improving Public Participation for further details.

PROCESSING TECHNOLOGIES

In Section 6.9, processing technologies were evaluated for the three primary source separated recyclables streams: residential and commercial/institutional materials, separated organics and construction and demolition debris. In general, processing will improve material quality which in turn improves marketability and increases revenues. However, as discussed in Section 6.9.2 it is very important to examine the feasibility and size issues associated with MRF construction and operation before proceeding. It is possible, for example, that long term hauling to a larger facility in another town or directly to market could be cost effective.

Residential and Commercial/Institutional Materials: The Town will procure access to a MRF for sorting and processing these materials, since processing simplifies collection - which in turn improves public participation - and improves materials marketability. The preferred approach is to join the four other East End Towns in procuring a MRF. Table 6-3 has suggested the likely range of materials that could be used as a guide to MRF planning. Actual equipment and facility design will depend on market specifications, collection approach and vendor selection. Size and expansion capability are important cost functions that should be further evaluated. In addition, it will be necessary to consider an economically sized MRF in the initial years when lower recyclables quantities are anticipated. The Town could also pursue either an inter-town agreement with Brookhaven or Islip to have commingled recyclables processed at their MRF or by a private vendor.

If these approaches can not be implemented, the Town may choose to construct its own MRF. The anticipated quantity of materials that will be collected by the Town alone are enough for low level processing to be feasible. The Town may consider other collection strategies under this scenario to obviate the need for extensive processing.

Source Separated Organics: Separated organics composting will, in all likelihood, remain the task of each municipality since the expense of transporting the material to a central facility is very costly. The Town will probably initiate separate windrow or static pile composting of leaves and yard waste at the landfill and consider this in the future at a transfer station in the west end of town. Sanitation department employees can be trained in composting procedures. Initially, for a pilot project, existing landfill equipment can be used to form and turn windrow piles. Site grading may be necessary to meet site drainage specifications under DEC Part 360-5.4, yard waste composting permit application guidelines.

Shredding or screening equipment may be necessary. Eventually, the Town may purchase aeration equipment such as specialized windrow turners or blowers and aeration piping. Alternatively, the Town will consider composting separated organics with municipal waste. This approach would obviate the need for special yard waste composting equipment and may improve the quality of the municipal solid waste compost product.

Construction and Demolition Debris: At this time, it appears that private enterprise, specifically George's Sanitation, Inc. is recycling significant quantities of the C&D generated in Southampton. This service is "profitable" in view of the current ban on C&D dumping in the North Sea Landfill. It is recommended that the ban be maintained and that the Town should continue to leave C&D recycling activities to the private sector unless private enterprise fails to maintain a continuing C&D recycling posture.

Schedules for implementing the recycling program are provided in Section 11.4. Table 11-3 provides a list of new activities to be implemented beginning in 1988, with increasing total capture goals for subsequent years.

MATERIALS MARKETING

The Town will take a number of steps to mitigate commodity market volatility problems and increase revenues.

The Town will join the largest regional marketing cooperative (CO-OP) open to it which can better manage the Town's materials marketing through a larger market share. Currently, a Suffolk County CO-OP appears to be the most likely arrangement. Processing generally improves marketability. As already indicated in this section, the Town should seek joint processing arrangements with other towns in the region to accumulate sufficient quantities to make high-level processing cost effective. It should be noted that costly processing technologies or arrangements should only be implemented if market specifications deem it necessary. The desirability and economics of MRF construction are quite complex and a considerable study of the actual availability of recyclables needed to make such a facility cost effective is necessary.

Although it is recommended that the Town join a regional cooperative, in which case the duties of marketing will fall to the respective association or agency, the Town will be in the position of marketing its own materials during the short-term and long-term should a CO-OP fail to develop. In this situation, the Town markedly can improve its market position through aggressive effort to become familiar with the many outlets available on Long Island and prudent marketing practices. During periods of poor market conditions, the Town will seek long-term market contracts to assure an outlet for materials collected in Southampton. When markets are favorable, the Town may choose to make spot-market selling the duty of a municipal employee to garnish maximum revenues.

9.1.1 Impacts on the Current Recycling Program

The long-term expansion of recycling activities in the Town will have some impacts on the current program, but the existing recycling program and its recent expansion are designed to facilitate a smooth transition to a long-term program. Capital expenditures have been kept to a minimum and carefully directed to avoid purchasing costly equipment that would be abandoned when the Town begins sending materials to a MRF. For example, the largest capital expense is the new bi-level recycling center. It is anticipated that this center will continue in use after the long-term program is implemented as a drop-off center for self-haulers and haulers.

The existing frame work for collection; self-haulers delivering recyclables to municipal drop-off centers and private haulers collecting curbside, will remain intact. Depending on MRF siting, the haulers may deliver collected recyclables to the MRF directly. Pick-up schedules are likely to change as other recyclable materials are added and frequency of collection is increased to improve participation.

The program expansion will increase the quantity of materials to be handled. The construction of the bi-level recycling center will make materials handling at the landfill more efficient and relieve pressure on the existing Sanitation Department staff to handle the larger quantities. The future MRF will eventually take over all processing and marketing activities and may receive materials directly from the haulers. If the Town brings its materials to a distant MRF, the Sanitation Department may need to expand its transfer operations to handle the larger quantities collected and accumulated at the landfill; although this possibility is not anticipated. Therefore, although the quantity of materials handled will increase due to the proposed program, changes in processing and marketing aspects planned for the long-term should obviate the need for changing the current role of the Sanitation Department.

9.2 EVALUATION OF MIXED WASTE CANDIDATE OPTIONS AND SYSTEM RECOMMENDATIONS

Section 7.0 has provided considerable information and summarized the generic technology options available, which include:

- MSW Composting, or co-composting with sludge if this is available.
- A mass burn or RDF combustion system.
- A combination of both methods.

Appendix H provides additional detailed information, flow diagrams and mass balances that suggest some of the most likely process configurations, and basis for our assessment of materials quantities.

This section evaluates these options and ranks them in accordance with their relative merits on the basis of the following criteria:

1. Relative Cost
2. Potential Environmental Impact
3. Implementation Risks
4. Conformity of the State Management Hierarchy

Following this ranking, the preferred system is identified together with an outline of the program envisioned, the approximate facility size and method of procurement.

Appendix H also indicates the considerable similarities between MRF design and front end processing for mixed waste, and offers the possibility that by combining these facilities, certain economies could be achieved. While we do not specifically evaluate this possibility as an option, it could be available, and could be considered during the procurement process.

9.2.1 Preliminary Cost Analysis

It is recognized that the cost for complex facilities such as those proposed are subject to many variations depending particularly on the size of facility selected and on site specific factors that have not been fully explored yet. However, it is reasonable to compare the likely relative costs of the two major options: i.e., a compost system or a combustion system, to provide in a general way, an idea of the overall scope of the work and the likely economic impact for the Town.

In order to determine the costs impact, it is first necessary to size the facilities such that they will have sufficient capacity to handle the expected waste stream, including seasonal variations.

From Figure 5-1 and Table 5-1, the basic growth projections coupled with scenarios reflecting reductions due to recycling a established, together with their seasonal impact. As previously noted, while the uncertainties in recycling capture can vary, nevertheless, we must assume that certain levels will be achieved in order to economically size the mixed waste system. Accordingly, we have assumed that a minimum of 30 percent net capture of targeted recyclables will be achieved by about 1992-93 when the facility goes on line, and the facility is sized for this rate through the year 2003. Further, it is postulated that future growth beyond that point will necessitate increased recycling to at least the 60 percent net capture rate (or 40 percent overall reduction), or an expansion of the facility. At these rates, the proposed facility will be expected to process about 115 tons per day during seasonal low periods, and 230 tons per day during the summer months.

It is recognized that costs are related to the actual facility size and capacity selected, and similar to the discussions in Section 6.9.2 on MRF costs, it is necessary to carefully assess the probable impact of recycling before making a final size selection. Nevertheless, for purposes of comparison, the sizes indicated above are used.

Economic Analysis

An economic analysis for mixed waste processing systems, whether it is a composting or thermal processing facility, must consider capital costs, operation and maintenance costs, project development costs and revenues from the sale of materials and/or energy. The economic analysis will be influenced by factors such as:

1. Waste throughput and facility size required;
2. Technology requirements;
3. Operation and maintenance requirements;
4. Transportation and disposal of residuals;
5. Rate and value of recovered materials and energy;
6. Project development costs (e.g. engineering, permitting, financing, etc.); and
7. Design factors such as site work, odor control and covered operations and storage areas required.

It should be recognized that the economic analysis conducted herein represents in-Town options only. These costs along with other factors will be used as a basis for evaluating the regional concepts. Costs alone are not the only consideration for implementing a solid waste management system.

Capital Costs

The capital costs are most directly related to the facility processing size required. As previously mentioned, the proposed mixed waste processing facility must be capable of processing about 115 tons per day during seasonal low periods and 230 tons per day during seasonal peak periods in the year 2003, and counts on recycling reductions for this smaller size to be feasible.

Capital costs include site work, buildings, structures, equipment, storage areas, personnel facilities and auxiliary facilities. For the analyses conducted herein, total capital costs are based on RFEI responses, on historical unit costs for facilities of similar design, and were adjusted for the Town's waste throughput for each alternative.

A thermal processing facility is assumed to operate 24 hours per day. Because of the seasonal waste load, at least two, and preferably three processing trains would be required. One processing train would be used during the seasonal low periods and two or three trains would be operated during seasonal peak periods. The scheduled downtimes and major maintenance would be accomplished during the seasonal low periods when one train is idle. During the seasonal peak periods, it is assumed that a thermal processing facility would be "available" to process waste 90 percent of the time. Therefore the installed capacity required is 255 tons per day (230 tpd 0.90 = 255 tpd), and this nominal size will be used for deriving capital costs.

A composting facility can operate on one, two, and for shorter periods for three shifts, depending on the waste throughput. It is assumed that a composting facility will operate for one shift during seasonal low periods and two shifts during seasonal peak periods. The third shift must be available for scheduled and unscheduled maintenance.

Therefore, the installed capacity of the composting facility will be 230 tons per day, based on two shifts of operation. This size will be used for capital costs estimates.

Responses to the RFEI for Southampton and our experience with other projects indicates that the unit costs for a thermal processing facility would be about $125,000 per installed "nameplate" ton in 1989 dollars. Similarly, a composting facility could range between $50,000 and $70,000 per installed ton per day of capacity. Using these units costs and the recommended facility sizes discussed above, a 255 tpd thermal processing facility would cost about $32,000,000 and a 230 tpd composting facility would cost about $15,000,000 to $18,000,000. Costs for a compost facility could be somewhat higher, depending on the need to cover process facilities for odor control, and redundancy requirements. Additionally, any savings in sludge disposal at Riverhead for a co-composting option would likely be off-set by additional capital and transport costs for that option.

A larger thermal processing facility in Brookhaven will be somewhat different than a smaller in-Town thermal facility. Therefore, $125,000 per installed ton should not be used to calculate the capital costs for a Brookhaven facility.

Operating and Maintenance Costs

Operation and maintenance (O&M) costs include labor costs; equipment maintenance, repair, and replacement; consumables; utilities; and facility management and administration. O&M costs may range from about $20 to $30 per ton for composting facilities although there is little experience with these costs at this point. O&M for combustion facilities may be between $30 and $40 per ton. Evaluating these figures with historical unit costs, we believe that approximately $35 per ton (1989 dollars) should be used for both composting and combustion facilities.

Revenues

For a combustion facility, electricity will be produced for sale to a local utility. It is assumed that approximately 500 kilowatt-hour per ton of refuse processed will be produced. Given the recent PSC decisions,

which have resulted in a potentially very unfavorable power sales climate for waste to energy facilities, it is prudent to review costs in this light. Accordingly, revenues of $0.06/kwh are anticipated for the first year of operation. However, a downside energy sales scenario could result in this revenue being reduced to about $0.03/kwh, which would result in a $15 per ton increase in tipping fee.

For a composting facility, revenues of up to $10/ton of composted material and perhaps more, could be realized. However actual revenues, assuming a market is available, will vary significantly depending of compost quality and quantity, and the demand for such a product. Therefore, particularly for the initial years, we have assigned a zero value to the compost for purposes of economic comparison.

Residuals Disposal Costs

Both composting and combustion facilities will generate rejects and residuals that must be landfilled. It is assumed that residual waste will be disposed of at the North Sea Landfill at a cost of $50/ton for the first year of facility operation.

Project Development Costs

In addition to the capital costs, the Town will incur costs for project financing, permitting and engineering. Interest during the construction period would likely be capitalized. It is expected that the project development and financing costs will result in the need for a bond size of 30% above the capital costs for a combustion facility and 40% for a compost facility, because of the lower cost and similar development expense needs.

First Year Tipping Fee Analysis

Table 9-2 summarizes approximate tipping fees for both a composting and an in-Town combustion facility. These costs are based on the capital, operation and maintenance, anticipated revenues, residual disposal costs, and project development costs as outlined in the previous paragraphs. For a composting facility, tipping fees are anticipated to be about $85-91 per ton for the first year of operation but could be as high as $93-99 per

ton. For a combustion facility, tipping fees are anticipated to be about $98 per ton. Based on this preliminary costs analysis a composting facility appears to have a more favorable tipping fee than a combustion facility.

Of course, as previously indicated, if source separated recyclables collection can be counted on to reduce the projected incoming waste stream to the facility, the size and cost could be reduced. Accordingly, when procurement is initiated, a further evaluation of size must be done.

Evaluation of costs for a regional facility will review the tipping fee "at the gate" plus costs for building a transfer station in Southampton, trucking waste to the regional facility, hauling residuals back to Southampton, and disposing of residuals at North Sea. Prior to any final commitments, all costs for any alternative will be determined.

9.2.2 Ranking of Candidate Options

Ranking procedures are intended to illustrate the relative differences in available in-Town options by comparing, on some organized basis, the issues of concern. As such no ranking system is absolute, nor can it convey the additional emphasis that any individual may believe is warranted for any particular factor it must be viewed as a means for subjective analysis. Nevertheless, it can provide the opportunity for comparison by focusing on a range of issues that are important, and does provide the basis for technology selection.

It is also noted that since Riverhead is currently responsible for disposal of sludge from the Joint Scavanger Waste Facility where Southampton septage is disposed, it would be necessary to investigate the intentions of Riverhead and the economics of transport further with respect to a sludge co-composting option.

Table 9-3, candidate options Evaluations Factors, has been prepared to identify the relative costs, potential environmental impacts, risks, and the priorities included in the New York State DEC hierarchy indicate a range of most favorable (value = 1) to least favorable (value = 10).

These values are somewhat subjective, particularly in the area of potential environmental impacts which are project specific and should be reviewed with a degree of caution. This Table reflects a relatively

MALCOLM PIRNIE

TABLE 9-2

PRELIMINARY FIRST YEAR TIPPING FEE ANALYSIS

		Composting Facility	Combustion Facility
Nominal Capacity (tpd)		230	255
Annual Average Throughput (tpd)		173	173
Estimated Capital Costs (1990$)		$15,800,000*	$33,600,000
Project Development Costs (Capital Costs)		$ 6,300,000	$10,000,000
Total Bond Size Required		$22,100,000	$43,600,000
Expenses			
Debt Service (10% interest for 20 years)		$ 2,597,000	$ 5,123,000
O&M Costs		$ 2,210,000	$ 2,210,000
Residuals Disposal(1)		$ 947,000	$ 947,000
Total Annual Expenses		$ 5,754,000	$ 8,370,000
Revenues	zero to	$ 370,000	$ 1,895,000
Net Cost		$ 5,384,000	$ 6,475,000
Net Cost Per Ton		$ 91*	$ 103
Cost at $10/ton Revenue or at $0.03/kwh		$ 85*	$ 118

*If capital costs for composting increase to $18,000,000, the net cost per ton will be in the $93-99 range.

Notes:

1. Residuals disposals assumed to be $50 per ton. Both facilities are anticipated to have a 30% rejects fraction in the first year.

2. Revenues for composting are anticipated to be from $0-10/ton and revenues for a combustion facility are calculated to be in the range of $0.03-0.06/kwh. Energy production is assumed to be 500 kwh/ton of waste processed.

TABLE 9-3

CANDIDATE OPTIONS EVALUATION FACTORS

Candidate Option	New York State DEC Hierarchy				Costs[1]		Potential Environmental Impacts[2]								Risks[3]		
	Priority	Recycle[4]	Energy[5]	Landfill[6]	Capital	Net per Ton	Air Quality	Fugitive Dust	Odors	Traffic	Land Required	Noise	Water Supply	Waste Water Disposal	Technical	Market	Financial
Composting	1	2	5	4	4	3	2	4	6	3	4	2	1	2	5	6	5
Co-Composting	1	2	5	4	4	3	2	4	7	3	4	2	1	2	5	7	6
Mass Burn	3	8	2	3	7	4	6	2	2	2	3	1	3	1	2	1	2
RDF	3	5	1	3	9	4	6	2	2	2	3	2	3	2	2	1	3
Combined RDF and Co-Composting	2	2	3	2	10	5	4	4	4	3	4	2	2	2	4	3	4

Ranking Value Notes

Notes:		#1	#10
1.	Costs	Least	Most
2.	Potential environmental impact	Least	Most
3.	Risks	Least	Most
4.	Recyclables captured	Most	Least
5.	Net energy consumption	Least	Most
6.	Residue to landfill	Least	Most

higher level of concern for the possible impact on air quality, for example, as compared to the possible impact on water supply. The following discussion identifies a few of the reasons for variability in the rankings.

Any of the five systems listed can be designed to produce more or fewer recyclables. However, to take full advantage of the power-generating capabilities of an RDF or mass burn facility, one does so at the sacrifice of the capture of some portion of possible recyclables.

Once MSW is burned in an RDF or mass burn system, the only disposable product, besides some non-processible reject materials, that is directed to landfill, is ash. However, in the case of compost operations, unless the compost product is actually sold or productively used, it could end up in the landfill in more significant quantities than the ash from either an RDF or mass burn facility.

The relative net costs per ton are highly influenced by the market for the products and the site specific engineering design needs that may vary with any technology. Indeed, it is conceivable that for some recyclables, at times, it may be necessary to pay someone to take them away. This condition may still be acceptable if it results in less cost than the alternative of directing the material to the landfill. In spite of the objective deficiencies apparent in such a summary, it exposes a number of concerns for consideration.

Table 9-4, a Summary Ranking of Candidate Options, reduces the number of considerations to a few broad categories, namely:

- Conformity to New York State DEC Hierarchy
- Probable Costs
- Potential Environmental Impacts
- Risks

As discussed above, the resultant listing of "most favorable" to "least favorable" reflects a combination of the less variable evaluations of known technologies with the more variable ones concerning long-term markets and prices, along with a subjective weighing of the relative importance of the various potential environmental impacts. Because the

details of a Brookhaven alternative are not available at this time, it is not possible to include it in this ranking.

9.2.3 Recommended Option

The RFP process for a mixed waste processing facility may also consider regional options. Various cost issues and other factors associated with this option must be evaluated before a decision should be made.

It is recommended that Southampton develop its own mixed waste processing facility if an in-Town alternative is the preferred system.

It is apparent from the above evaluation, that composting is the most favorable mixed waste processing option for all factors except risks for which mass-burn is most favorable. The composting marketing risks will be a key factor when comparing the advantages and disadvantages of a regional facility. The RFP should be carefully written to bring the different proposals into relative equivalence and it should require sufficient, financially backed guarantees from the vendor to limit the Town's risk posture.

Co-composting could be considered, after discussions with Riverhead, and its evaluation included in the procurement options of an RFP process. In this way an opportunity to examine the relative costs for vendor specific systems would provide a practical assessment.

Although the marketability of MSW compost is a serious risk, two significant factors that have been previously discussed in detail may reduce this risk so that composting is a viable option. These are: 1) the availability of sufficient backup landfill capacity and future potential capacity to provide emergency or downtime disposal if this is needed; and 2) the preliminary indications that eastern Suffolk County has the potential to develop a market for MSW compost, if this is pursued aggressively with a high quality product. It is important to note that the ability to market is at least partially dependent on the fact that only about 7 percent of the potential market is targeted. For obvious reasons, as more communities begin to compost various organic materials, the difficulty of marketing a new product will increase.

TABLE 9-4

SUMMARY RANKING OF CANDIDATE OPTIONS

Conforms to New York State DEC Hierarchy

Most favorable	Composting*
2nd most favorable	Combined RDF & composting*
3rd most favorable	RDF
Least favorable	Mass Burn

Capital and Net Costs

Most favorable	Composting*
2nd most favorable	Co-composting*
3rd most favorable	Mass Burn
4th most favorable	RDF
Least favorable	Combined RDF & composting

Potential Environmental Impacts

Most favorable	Composting
2nd most favorable	Co-composting
3rd most favorable	Combined RDF & composting
4th most favorable	RDF
Least favorable	Mass burn

Risks

Most favorable	Mass Burn
2nd most favorable	RDF
3rd most favorable	Combined RDF & composting
4th most favorable	Composting
Least favorable	Co-composting

*Contingent upon the ability to successfully market compost product.

As previously noted, it is also important to recognize that the recommendation of a flexible RFP approach for MSW composting is based upon an acknowledgement of several factors that must be carefully addressed in the procurement process to make the project a success. These factors include:

1. Since the development of "state-of-the-art" composting systems in the U.S. is relatively new, and there is little operating experience with facilities similar to that proposed in this Country, there are some inherent risks in the technology and procurement process that must be carefully addressed. Malcolm Pirnie and Cal Recovery Systems are well aware of these issues and believe that an RFP and contract can be structured to provide suitable risk avoidance for the Town.

2. A key to developing a suitable project will be the preparation of sufficiently detailed technical and contractual procurement documents that address the major design requirements and environmental safeguards required to construct a facility that the Town can be confident will work reliably. More defined size and processing capacity requirements in conjunction with a practical assessment of how much waste can be recycled will be a part of this work.

3. The ability to market the compost or sell electricity is fundamental to project success, and must be investigated further during the procurement process so that a confirmation of the preliminary assessment done in this report can be made with respect to actual as opposed to potential markets. Additional waste composition data may also be necessary. In this regard we will likely recommend that project economics not depend upon sales of compost, but merely the ability to provide a market, including the cost of transportation.

4. Given the status of the technology and the importance of minimizing financial risk, it is recommended that the Town develop a procurement strategy in accordance with NYS GML 120-w (negotiated competitive process) with the objective of selecting an experienced private vendor who will design, construct and operate the facility on a long term basis (20 years), and who has sufficient financial backing to be able to provide suitable guarantees for the system. Ownership would likely best be public, but a private offer could be considered.

As previously discussed, another alternative that could be considered in the procurement includes the ability of the mixed waste processing system to handle source separated recyclables, thus precluding the need to have a separate MRF. It is possible that such a system could be economically attractive to the Town and to vendors, and could offer certain operational and project efficiencies. This option could also be readily explored further during the RFP process to determine its cost effectiveness.

9.3 OTHER MEANS OF PROGRAM ENHANCEMENT

The Town recognizes that future program enhancement will be directed at improving the effectiveness and efficiency of existing programs and developing markets for materials that are not readily recyclable at this time. In addition to establishing the recommended program outlined in Section 9.1, the Town will consider various program enhancement activities. Some of the activities the Town is considering are:

- Improving the drop-off centers at the transfer stations;
- Instituting new volume (pay by the bag) or weight based disposal fee structures;
- Working with private industry and universities to develop new and existing markets for recoverable waste materials;

- Researching and implementing new strategies for waste reduction by commercial establishments and residents; and

- Encouraging the development of private recycling businesses in the region.

9.0R CANDIDATE OPTIONS ANALYSIS AND RECOMMENDATIONS

The Original SWAMP recommended an extensive source-separation program for recyclables in conjunction with the development of an MSW composting facility. The decision to develop a mixed MSW composting project was based on a comparative analysis performed between composting and incineration, and composting's more favorable rating in conforming to the NYSDEC's hierarchy, anticipated costs and potential environmental impacts. Incineration received a more favorable rating in terms of risks involved, since incineration is a well-developed technology, with many operating facilities in the U.S., while MSW composting is considered a relatively new technology in the U.S.

As discussed in Section 7.0R, the Town has re-evaluated its position favoring MSW composting. Because the problems with MSW composting were related to the unmarketable quality of the MSW compost, and not with the concept of composting per se, the Town considered other forms of composting as part of its re-evaluation. Four basic cases were developed for analysis, based upon the Town's investigation of potentially available alternatives that were likely to satisfy the Town's solid waste management needs. These cases, and various permutations thereof, are described below:

- <u>Case 1: Complete In-Town Recycling and MSW Composting System</u>

  This alternative involves the recycling and/or composting of all MSW generated in the Town. The food waste portion is assumed to be included with the mixed waste. Leaf and yard waste would be composted using a "low-tech" approach since there is less concern for odors and vectors.

  - Case 1A assumes successful marketing of compost, that is, that the compost could be sold (or given away) for $0 per ton, but that the material would not have to be landfilled.

  - Case 1B assumes low-grade compost failure, i.e. that the compost generated from MSW composting could not be sold or given away and must be landfilled.

  - Case 1C assumes a simplified pre-processing system for MSW composting with failure to market the resultant compost and the need for it to be landfilled.

- Case 2: In-Town Recycling System and a Regional Waste-to-Energy System

  This case involves the in-Town processing of source-separated recyclables and composting of leaf and yard waste. Mixed waste, including food waste, would be transferred to a regional waste-to-energy facility for ultimate disposal. It was assumed that this facility would be located within 55 miles of the Town.

- Case 3: In-Town Recycling, Leaf/Yard Waste Composting with Regional Mixed MSW Composting

  This case is divided into two sub-alternatives.

  - Case 3A relies primarily upon the regional MSW composting facility. Sorting of source separated recyclables and leaf and yard waste composting would be performed in-Town. It was assumed that 30 percent of the residue from the mixed waste composting facility, or up to 150 tpd would be disposed of at the North Sea Landfill, with credit given for the portion of residue originating from the Town's waste. Source separated recyclables would be transferred to a regional MRF.

  - Case 3B is similar to Case 3A except that mixed MSW would be pre-processed in-Town to recover recyclables prior to being transferred to the regional facility. Source separated recyclables and leaf and yard waste would be handled in-Town.

- Case 4: Intensive Source-Separation Program with Organics Composting in-Town, and MSW Processing in-Town

  All Case 4 sub-cases involve the composting of source separated organic materials in-Town, and the processing of MSW in-Town to remove recyclables and organics. All compost generated would be successfully marketed, i.e. that it could be sold for at least $0 per ton, and it would not have to be landfilled.

  - Case 4A assumes the construction of a MRF in-Town, and a leaf and yard waste composting facility in-Town.

  - Case 4B is similar to 4A, except the MRF would be a regional facility, and hence no revenues would be received by the Town for these recyclable materials. Leaf and yard wastes would also be composted at a regional facility.

  - Case 4C is similar to 4B, with recyclables transferred to a regional MRF for processing. Leaf and yard wastes, however, would not be collected, and would be banned from the landfill.

  - Case 4D also bans leaf and yard wastes from the Town's system. A MRF would be constructed in-Town to process recyclable materials.

- Case 4E assumes that source-separated recyclables would be transferred out of Town for processing, but leaf and yard wastes would be composted in-Town.

Twenty-year life cycle analyses were run for each case. Table 9-1R summarizes the results of this analysis, showing the yearly cost for each system, beginning in 1995. Appendix M provides the detailed waste quantities and costs for each component of the system, and provides the back-up for Table 9-1R.

Waste-to-energy, Case 2, was eliminated from further consideration due to relatively high costs, difficulty in implementation, and potential environmental impacts. Mixed MSW composting was evaluated while keeping in mind that the compost produced might not meet necessary specifications and might end up being landfilled. In-town and regional materials recovery facilities were also examined. It appears unlikely that a regional MRF will be developed, due to pending litigation, and the development of an in-town MRF is costly.

For each of the four cases and associated sub-cases outlined above, updated data and costs were analyzed to reflect current conditions. The analysis evaluated projected incoming waste quantities, estimated facility debt service and operating costs, and potential material revenues from compost and recyclables for the proposed systems. Additionally, landfill costs for the disposal of system rejects and residuals, downtime wastes, and unmarketed compost were estimated for each proposed system. Waste-to-energy costs and the costs of out-of-town recycling and composting services were evaluated for applicable cases. For each case, the total cost and the total unit cost ($/ton) of each proposed system was determined. Appendix M provides the detailed analysis developed for each case and sub-case. The results of these analyses indicate that there is no reason to alter the conclusions of the Original SWAMP for cases 1, 2 and 3. Therefore, Southampton focused on the Case 4 alternatives, and decided to take a conservative hybrid approach for maximizing recovery of saleable materials while minimizing the quantity of material requiring landfilling. The Town concluded that waste reduction with increased source-separation of materials, including the source-separation of organic materials, would then significantly reduce the remaining MSW stream. This MSW stream would then be subjected to pre-processing to further remove recyclables and organics, and the remaining material could be landfilled. Since the Original SWAMP was issued, the Town has proceeded with its proposed aggressive source separation and recycling program as outlined in the Original SWAMP.

TABLE 9-1R

TOWN OF SOUTHAMPTON
20-YEAR LIFE CYCLE ANALYSIS
CASE SUMMARIES

SUMMARY OF CASE ANALYSES	YEAR 1	YEAR 2	YEAR 3	YEAR 4	YEAR 5	YEAR 6	YEAR 7	YEAR 8
CASE 1A: COMBINED IN-TOWN MSW/LEAF&YARD/FOOD WASTE COMPOSTING WITH SUCCESSFUL COMPOST MARKETING	58.50	59.00	59.50	60.60	62.00	63.40	65.00	66.60
CASE 1B: COMBINED IN-TOWN MSW/LEAF&YARD/FOOD WASTE COMPOSTING WITH LOW GRADE COMPOST MARKET FAILURE	77.60	77.40	77.20	78.20	79.70	81.20	83.00	84.90
CASE 1C: COMBINED IN-TOWN MSW/LEAF&YARD/FOOD WASTE COMPOSTING WITH REDUCED COSTS AND LOW GRADE COMPOST MARKET FAILURE	72.70	72.50	72.10	73.00	74.40	75.90	77.50	79.30
CASE 2: RECYCLING,COMPOSTING AND TRANSFER WITH REGIONAL WASTE-TO-ENERGY	74.70	74.50	74.10	75.60	77.70	79.90	82.50	85.20
CASE 3A: IN-TOWN LAY WASTE COMPOSTING AND TRANSFER FACILITY WITH REGIONAL MSW COMPOSTING AND MATERIALS RECOVERY	96.30	98.90	101.70	104.40	107.50	110.60	113.80	117.30
CASE 3B: IN-TOWN MSW PRE-PROCESSING,LAY WASTE COMPOSTING, AND SOURCE-SEPARATED MATERIALS RECOVERY WITH REGIONAL MSW COMPOSTING	78.60	80.30	82.00	83.90	86.00	88.10	90.30	92.70
CASE 4A: IN-TOWN MRF RECYCLING, LEAF & YARD COMPOSTING, AND ORGANIC WASTE COMPOSTING	60.20	58.70	57.50	57.90	58.80	59.70	60.80	62.10
CASE 4B: IN-TOWN MRF/TRANSFER FACILITY, ORGANIC WASTE COMPOSTING AND LEAF & YARD COMPOSTING BY PRIVATE SECTOR	61.90	60.90	61.10	62.90	64.70	66.40	68.40	70.30
CASE 4C: IN-TOWN MRF/TRANSFER FACILITY, ORGANIC WASTE COMPOSTING AND NO LEAF & YARD WASTE COLLECTION	68.30	67.20	66.40	67.40	68.80	70.40	72.20	74.10
CASE 4D: IN-TOWN MRF RECYCLING AND ORGANICS WASTE COMPOSTING; NO LEAF & YARD WASTE COLLECTION	63.60	61.90	60.40	60.70	61.80	62.60	63.80	65.10
CASE 4E: IN-TOWN MRF/TRANSFER FACILITY, LEAF & YARD COMPOSTING, AND ORGANIC WASTE COMPOSTING	64.30	63.50	62.90	63.70	65.10	66.50	68.20	70.00

FILENAME: PRPSUM2

TABLE 9-1R

TOWN OF SOUTHAMPTON
20-YEAR LIFE CYCLE ANALYSIS
CASE SUMMARIES

SUMMARY OF CASE ANALYSES	YEAR 9	YEAR 10	YEAR 11	YEAR 12	YEAR 13	YEAR 14	YEAR 15	AVG
CASE 1A: COMBINED IN-TOWN MSW/LEAF&YARD/FOOD WASTE COMPOSTING WITH SUCCESSFUL COMPOST MARKETING	68.40	70.30	72.30	74.40	76.60	79.00	81.40	87.80
CASE 1B: COMBINED IN-TOWN MSW/LEAF&YARD/FOOD WASTE COMPOSTING WITH LOW GRADE COMPOST MARKET FAILURE	87.00	89.20	91.40	93.80	96.40	99.00	101.70	86.51
CASE 1C: COMBINED IN-TOWN MSW/LEAF&YARD/FOOD WASTE COMPOSTING WITH REDUCED COSTS AND LOW GRADE COMPOST MARKET FAILURE	81.30	83.40	85.50	87.80	90.20	92.70	95.20	80.90
CASE 2: RECYCLING,COMPOSTING AND TRANSFER WITH REGIONAL WASTE-TO-ENERGY	88.20	91.40	94.60	98.10	101.60	105.40	109.20	87.51
CASE 3A: IN-TOWN LAY WASTE COMPOSTING AND TRANSFER FACILITY WITH REGIONAL MSW COMPOSTING AND MATERIALS RECOVERY	120.80	124.40	128.10	131.90	136.10	140.20	144.40	118.43
CASE 3B: IN-TOWN MSW PRE-PROCESSING,LAY WASTE COMPOSTING, AND SOURCE-SEPARATED MATERIALS RECOVERY WITH REGIONAL MSW COMPOSTING	95.00	97.40	100.00	102.70	105.30	108.10	111.00	93.43
CASE 4A: IN-TOWN MRF RECYCLING, LEAF & YARD COMPOSTING, AND ORGANIC WASTE COMPOSTING	63.50	65.00	66.60	68.20	69.90	71.70	73.50	63.61
CASE 4B: IN-TOWN MRF/TRANSFER FACILITY, ORGANIC WASTE COMPOSTING AND LEAF & YARD COMPOSTING BY PRIVATE SECTOR	72.50	74.70	77.10	79.60	82.10	84.80	87.60	71.67
CASE 4C: IN-TOWN MRF/TRANSFER FACILITY, ORGANIC WASTE COMPOSTING AND NO LEAF & YARD WASTE COLLECTION	76.30	78.60	81.00	83.50	86.20	88.90	91.80	76.97
CASE 4D: IN-TOWN MRF RECYCLING AND ORGANICS WASTE COMPOSTING; NO LEAF & YARD WASTE COLLECTION	66.60	68.10	69.80	71.50	73.30	75.20	77.20	66.76
CASE 4E: IN-TOWN MRF/TRANSFER FACILITY, LEAF & YARD COMPOSTING, AND ORGANIC WASTE COMPOSTING	72.00	74.10	76.30	78.70	81.10	83.70	86.30	71.76

FILENAME: PRPSUM2

In order to implement the intensive source separation program recommended in this Revised SWAMP, the Town's existing program will be expanded, as outlined in Section 6.0R.

The advantages of such an approach are obvious. Markets exist for source-separated recyclables. Source-separated leaf and yard wastes would be composted outdoors, and source-separated food and paper wastes would be composted in an enclosed environment. Both compost streams would result in high-quality compost, free of contaminants, which could be utilized as soil enhancers, not landfilled. The remaining MSW stream, substantially reduced, would still be pre-processed for further removal of recyclable and organic fractions. At this point, the remaining residuals would be relatively inert --- free of recyclables and organic materials, and could safely be landfilled. During the off-peak season, when there would be excess capacity available within the source-separated organics composting system, the residual mixed waste would also be composted. This overall approach ensures that a greater portion of the solid waste stream will never reach the landfill.

The five Case 4 alternatives all involve intensive source-separation of organic materials, and variations of materials recovery, leaf and yard waste composting, source-separated organics composting and a tipping floor/pre-processing area for remaining MSW. The components of each alternative are summarized in Table 9-2R. In all five cases, source-separated organics would be composted and all MSW would also be preprocessed within the Town. All of the alternatives were examined under a worst-case scenario with the assumption that MSW compost would not be marketable and would need to be landfilled.

Under all scenarios, an intensive source-separation program would be implemented which would continue and expand the existing program and rely on an extensive public education program, technical assistance provided to commercial establishments and to private haulers to maximize recycling and source-separation, possible upgrading of equipment utilized by the haulers, and strict enforcement of mandatory source-separation laws by the Town.

MRF Facility

It was also decided not to construct a MRF in-Town at this time. Although the in-Town alternatives yielded a lower net cost, due to the Town's receiving revenues for the recyclable materials, these revenues may not hold in the future, and the significantly greater capital cost required for an in-Town MRF could not be justified. The Town felt that this

TABLE 9-2R

TOWN OF SOUTHAMPTON
LONG TERM SOLID WASTE MANAGEMENT PROGRAM

INTENSIVE RECYCLING SCENARIOS

Case	Source Separated MRF Processing	Organics Composting	L&Y Waste Processing	Remaining Waste Processing	Approximate Capital Cost
4A	In-Town	In-Town	In-Town	In-Town	$7,700,000
4B	Out-of-Town	In-Town	Out-of-Town	In-Town	$4,000,000
4C	Out-of-Town	In-Town	Banned	In-Town	$4,000,000
4D	In-Town	In-Town	Banned	In-Town	$6,400,000
4E	Out-of-Town	In-Town	In-Town	In-Town	$5,300,000

greater initial investment would not yield substantial cost savings. However, the Town of Southampton is willing to add material benefication and pre-processing to the recommended facility in the future, if it can be justified on economic grounds or by the need to further reduce the quantity of material being landfilled. Such benefication would include additional sorting lines, glass crushers and other means of separation, as deemed appropriate.

The source-separated recyclables brought to the facility estimated to be about 50 tons per day (tpd) will be minimally processed, consolidated as necessary, possibly baled as market conditions dictate, and transferred into the market place.

Organic Composting

The Town of Southampton intends to construct a facility sized to handle about 280 tpd of source-separated recyclables, source-separated organic waste, source separated leaf and yard waste, and the remaining mixed MSW stream.

Source-separated organics will be visually inspected, and will be directed to an indoor mechanical composting facility, preceded by conveyors, shredders, trommels and bag breakers. The composting enclosure will be sized to accommodate seasonal peak loads (approximately 40 tpd). The material will be composted in windrows using windrow turners. Composting should be completed within 6 weeks, followed by another 6 weeks of outdoor curing, followed by storage and sale to end-users. The process will be performed in accordance with all NYSDEC regulations, and the material will be screened to remove traces of plastics or other contaminants and tested prior to marketing. Current surveys indicate that this compost could be successfully marketed.

Leaf & Yard Waste

The Town had considered banning leaf and yard wastes from the landfill (Cases 4C and 4D), but decided that this waste should be the Town's responsibility. Leaf and yard waste composting is not a service readily available in the private sector, and since established collection patterns existed for residential and commercial leaf and yard waste, the Town decided to take on this responsibility, and include it in their recommended plan.

Source-separated leaf and yard waste will be composted in a segregated outdoor area of the facility, which will be capable of handling seasonal peaks or approximately 40 tpd. These types of wastes do not usually produce problematic odors, but should they occur, the problem-causing materials can be transferred indoors.

Remaining Waste Processing

The remaining residual mixed MSW stream will average about 150 tpd during peak season and will be brought to the facility's tipping floor, and will be pre-processed to remove easily identifiable and readily extractable recyclable and organic materials. These materials, once removed will be set aside for transfer to the market place, or for composting with source separated organics. After this initial pre-processing, the mixed MSW will be disposed of at the landfill.

During the off-peak season, there will be excess facility capacity in the source separated indoor composting area to allow for composting of a portion of the mixed MSW stream. This composting will be a separate process from the normal organic composting. The remaining MSW will be disposed of in the landfill. If the MSW composting operation yields a compost which can be successfully marketed, i.e. that it can be given away or sold, the Town will consider expanding the mixed MSW composting operation.

Figure 9-1R illustrates the flow of materials at the North Sea Landfill facility. The preliminary site plan for the recommended alternatives is shown on Figure 9-2R.

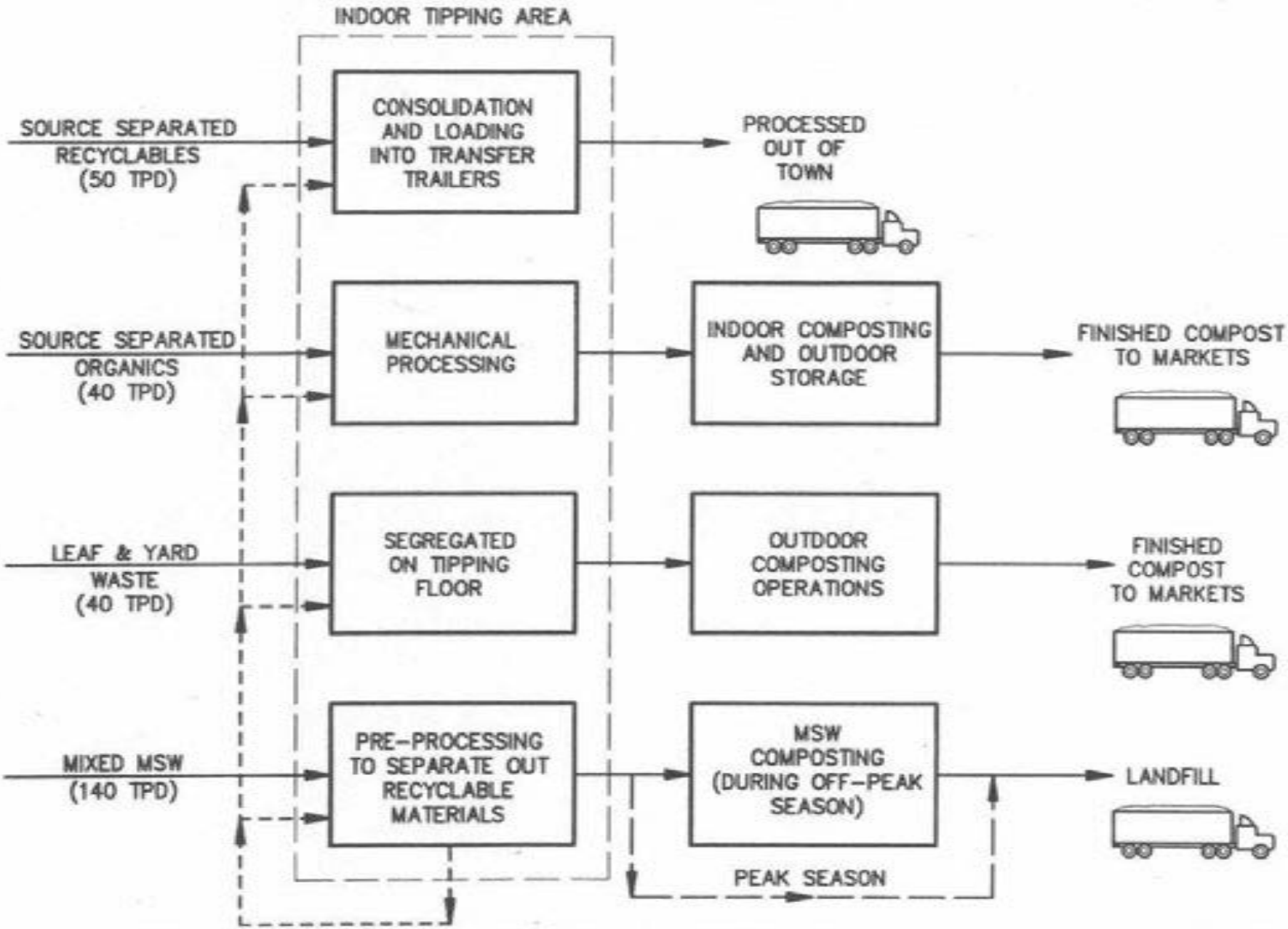

MALCOLM PIRNIE	TOWN OF SOUTHAMPTON, NEW YORK REVISED SOLID WASTE ACTION MANAGEMENT PLAN	PROPOSED INTEGRATED SOLID WASTE MANAGEMENT FACILITY FLOW DIAGRAM	MALCOLM PIRNIE, INC. FIGURE 9-1R

10.0 SITE SELECTION

10.1 INTRODUCTION AND SUMMARY

The siting of long-term solid waste management facility(ies) is a critical step in project development. As described in Section 9, the candidate options analysis has recommended a mixed waste processing facility and a source separated recyclables materials recovery facility (MRF) for the Town's SWAMP. The objective of this siting process is to provide a methodology for evaluation of the entire Town to assure that the locations that are selected for these facilities are consistent with long term planning and appropriate for the development of these important projects. This will enable the Town to identify and review all potential sites that may be suitable for these projects and to verify that the ultimate selection is reasonable and environmentally sound. Several environmental, social, and economic factors are considered in selecting potential sites. The siting criteria in this report considered current planning and development patterns within the Town and existing aesthetic qualities, while still providing an economically feasible and environmentally sound location for the proposed facilities. As previously discussed, the existing landfill has approximately 19 acres available for continued disposal of MSW and for disposal of residuals when the mixed waste processing facility is implemented. This is sufficient capacity for these needs and therefore a new landfill site is not required.

The purpose of this section is to recommend a site for a mixed waste processing facility that can provide long-term solid waste management in the Town for the planning period, and to propose candidate site(s) for consideration for source separated recyclables processing. The future consideration of a waste transfer station in the west end of the Town is also proposed.

The East End Recycling Association is currently discussing implementation of a MRF including consideration of a County owned site located at the Suffolk County Airport in Southampton. Accordingly, it is recognized that while siting and processing options for source separated recyclables will not be finalized in this GEIS, the basis for selecting a site for a

MRF in Southampton is complete as required under SEQR and the Town can proceed in this direction.

Proposed facilities for both recyclables and mixed waste processing are described in Section 9.0. These facilities utilize different process technologies, and while the siting requirements are similar, since both are industrial-type facilities, there are important differences that must be considered. The mixed waste processing facility will receive raw refuse and must consider all of the issues associated with this type of waste. It is expected to require about 25 acres of land available for development, with an additional 100-foot buffer surrounding the facility site. The materials recovery facility will receive only source separated recyclables, and will be similar to a warehousing or light manufacturing facility. A facility such as the regional MRF under consideration will require about 10 acres, with additional space for a 100-foot buffer. This would be capable of accommodating a MRF for all of the east end towns, or for Southampton alone.

Evaluation Procedures - This siting study has been divided into a two stage evaluation. The initial stage of the site selection process included the application of exclusionary criteria to identify land available for consideration.

This evaluation focused on existing zoning and land ownership for identification of potential sites. Preference was given to areas zoned light industrial and Town-owned parcels as suitable sites for development of the proposed facilities. This stage resulted in identification of two candidate sites with sufficient space available (at least 25 acres) for the mixed waste processing facility and three candidate sites with sufficient space available for a MRF (having at least 10 acres).

The qualitative evaluation of the candidate sites that remained following the application of exclusionary criteria was the final step in this study. Based upon the results of the qualitative analysis, the North Sea Landfill was selected as the recommended or preferred site for the mixed waste processing facility and two of the identified sites remain as candidate sites for the MRF, in addition to the County owned site identified by the Long Island Regional Planning Board (LIRPB) in the Southeast corner of the Airport.

10.2 EXCLUSIONARY CRITERIA

Exclusionary criteria were first applied to the entire Town. This phase was intended as an application of broad criteria to eliminate those areas that are not properly suited for the development of the proposed facilities. Existing zoning and land ownership were utilized for identification of potential areas. Then, the potential sites were screened based on environmental and social exclusionary criteria.

In order to maintain current and future land use patterns and to reflect the goals of the Town's Master Plan and recent planning updates to the greatest extent possible, existing zoning was used as a guideline for identifying potential facility sites within the Town. The Town's zoning falls into four general categories, including residential, business, light industrial and open space conservation. Areas zoned for Country Residence, Residence, Multi-Family Residence, Mobile Home, and Senior Citizens are all residential development. Prudent planning considers a distinct separation between such residential and industrial land uses. Since the Town's zoning code is considered to be representative of land use patterns within the Town, residential zoning was considered inappropriate for further consideration. Similarly, all parcels zoned for open space conservation were excluded from further consideration.

Highway Business, Motel Business, Shopping Center Business, and Village Business zonings are located in areas that have been identified by Town Planners as being best-suited for developments that provide service to the public such as shopping malls, service stations and convenience stores. Therefore, these areas are not considered suitable for further consideration. Resort and Waterfront Business and Office Business zonings are also, to a large extent designated by the locations that are suitable for such development. These zonings are also considered inappropriate for the proposed facilities. Therefore, Light Industrial zonings were identified as suitable for the development of the proposed facilities.

Since, site acquisition can be both costly and time consuming, economic benefits would be derived from developing land that is already owned by the Town. Based on discussions with the Town Planning Department, the Town's property database and tax maps, undeveloped Town-owned parcels have been identified. These sites were further considered for suitability regardless of existing zoning.

The following exclusionary criteria were applied to the areas remaining:

- Flood Plains
- Agricultural Soils
- Dedicated Parklands and Open Space
- Villages
- Developed Land Use

Any areas that are designated as flood plains by the Federal Emergency Management Agency (FEMA) have been eliminated from further consideration. Flood plains are the area within the 100-year flood elevation contour as identified on the Federal Flood Insurance Rate Maps (FIRMS). Development within the flood plain is regulated by the federal government in order to reduce the potential for catastrophic losses due to flooding. Furthermore, development of solid waste management facilities within a flood plain is prohibited pursuant to 6 NYCRR Part 360-1.14(c)(2). The Town's zoning maps identify the 100-year flood elevation as the boundary of the Tidal Wetlands Overlay district. In addition, the Town restricts development in those areas. Therefore, the Town's boundaries for this Tidal Wetlands Overlay district was used to delineate and eliminate the 100-year flood plain.

In accordance with 6 NYCRR Part 360-1.14(c)(1), solid waste management facilities must not be placed on areas containing primarily agricultural soil groups 1 and 2 (Land Classification System as certified by the New York State Commission of Agriculture and Markets) if such land is being actively used as cropland within an agricultural district formed pursuant to the Agricultural and Markets Law. The Town identifies these soil types on the Town zoning maps as the Agricultural Overlay District. All areas that are within the Agricultural Overlay district have been eliminated from consideration.

As previously described, this siting process has been designed to maintain existing and future land use patterns to the extent possible. Therefore, lands that are designated for preservation such as parklands, recreation areas or conservation areas have been eliminated from consideration. Cemeteries have also been excluded from consideration. In addition, areas within the incorporated villages of the Town have been excluded from consideration due to high residential density occurring within the villages.

Only areas that are presently undeveloped are considered suitable for the development of the identified facilities. Currently developed and utilized areas are excluded from consideration due to the potentially costly and time consuming impacts associated with the relocation of the land use and/or demolition of existing structures. Maps and additional information available from the Town Planning Department and the LIRPB were utilized to identify areas designated for conservation purposes and developed areas.

10.3 IDENTIFICATION OF CANDIDATE SITE AREAS

Application of the previously discussed criteria effectively eliminates over 90 percent of the Town from further consideration. As a result of this phase of the site selection process, five sites with at least 10 acres plus buffer have been identified as candidate sites for the materials recovery facility. In addition, two of these sites are greater than 25 acres with sufficient space available for the recommended buffer area, and therefore will be considered for the mixed waste processing facility. The five candidate sites and the solid waste facilities able to be sited in these locations are:

- Hampton Bays Transfer Station (MRF)
- Westhampton Transfer Station (MRF)
- North Sea Landfill (mixed waste processing and MRF)
- Light industrial site north of Suffolk County Airport (mixed waste processing and MRF)
- Town-owned parcel at end of Deer Ridge Trail (MRF)

The Landfill and transfer stations currently support solid waste facilities and are considered available for future solid waste management activities. The Hampton Bays Transfer Station is located at the end of Jackson Avenue, south of Old Squires Road (see Figure 10-1). Five acres of the site currently support a residential drop off area for MSW and recyclables. A portion of the site is also used by the Highway Department as a equipment and material storage area. Eighteen acres remain are available for future development. The Westhampton Transfer Station is located at Old County Road just outside of the incorporated Village of Westhampton Beach (see Figure 10-2). This site also supports a residential drop-off area for MSW and recyclables. The drop-off area uses four acres of land and approximately ten acres remain undeveloped excluding buffer area. These facilities could be expanded to allow some additional recycling activities, however the narrow width of this site is such that it would preclude construction of a MRF.

The Landfill is located at Majors Path in the north eastern portion of the Town (see Figure 8-1 and Plate I - in pocket). The Landfill is southwest of North Sea Harbor and Fish Cove and is in a residential neighborhood. The site currently supports landfill activities; however, approximately 54 acres of land are still available for solid waste management activities; and at least 35 acres could be dedicated for a mixed waste processing facility.

The light industrial site, located north of the Suffolk County Airport and south of the Sunrise Highway, is currently undeveloped (see Figure 10-3). The site consists of three parcels with approximately 455 acres of available land excluding buffer area. The site is bounded by Old Riverhead Road to the west and Quogue-Riverhead Road to the east. The site is outside of the incorporated Village of Quogue.

The Town owns a 23-acre parcel of land that is currently undeveloped. It is located at the terminus of Deer Ridge Trail (see Figure 10-4); however, Deer Ridge Trail does not provide access onto the site. The parcel is zoned residential and is surrounded by residential development. After applying the recommended buffer area, this site is only available for a MRF since only 11 acres remain.

FIGURE 10-1

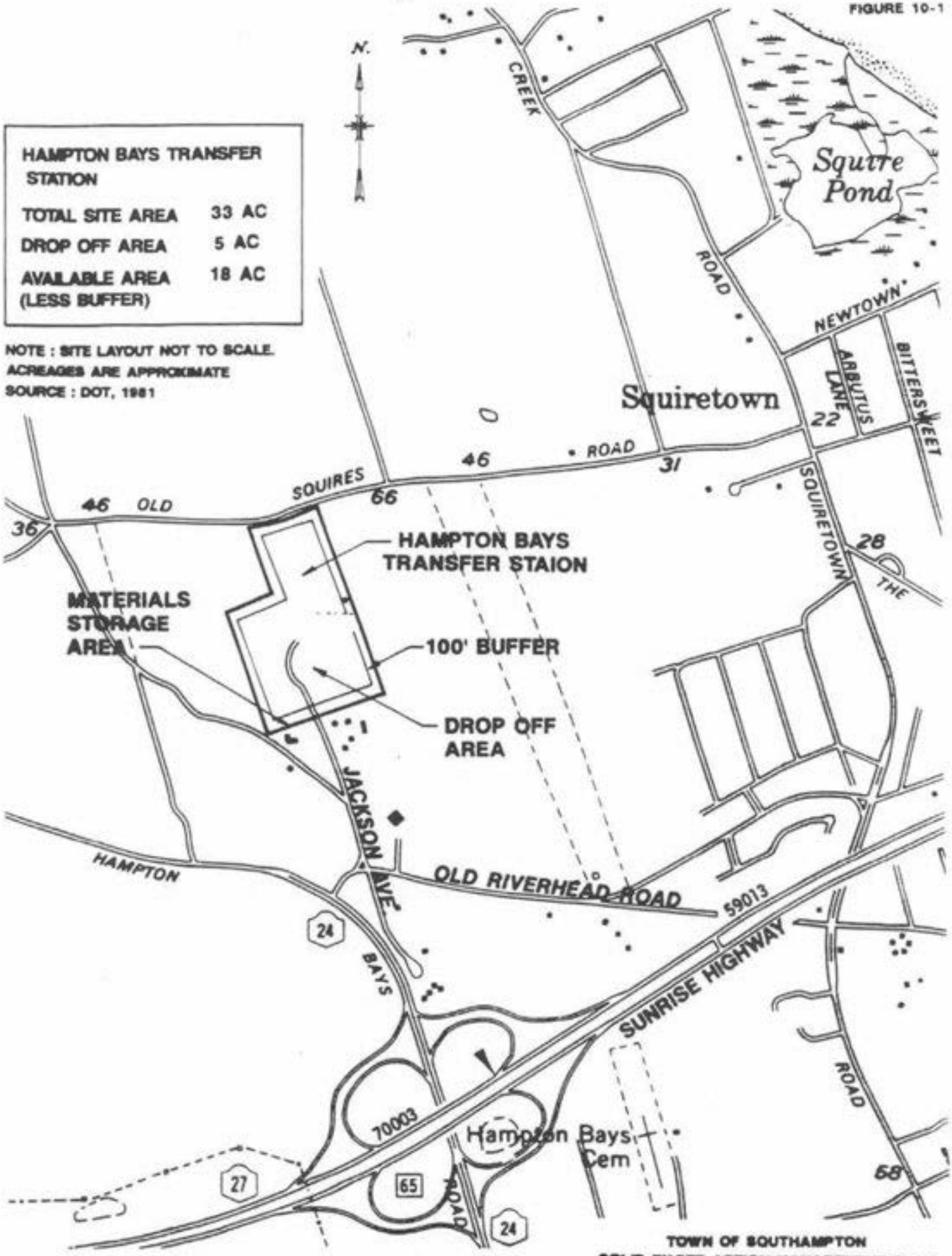

TOWN OF SOUTHAMPTON
SOLID WASTE ACTION MANAGEMENT PLAN
HAMPTON BAYS TRANSFER STATIO
SCALE 1" = 1000'

MALCOLM PIRNIE INC.

FIGURE 10-2

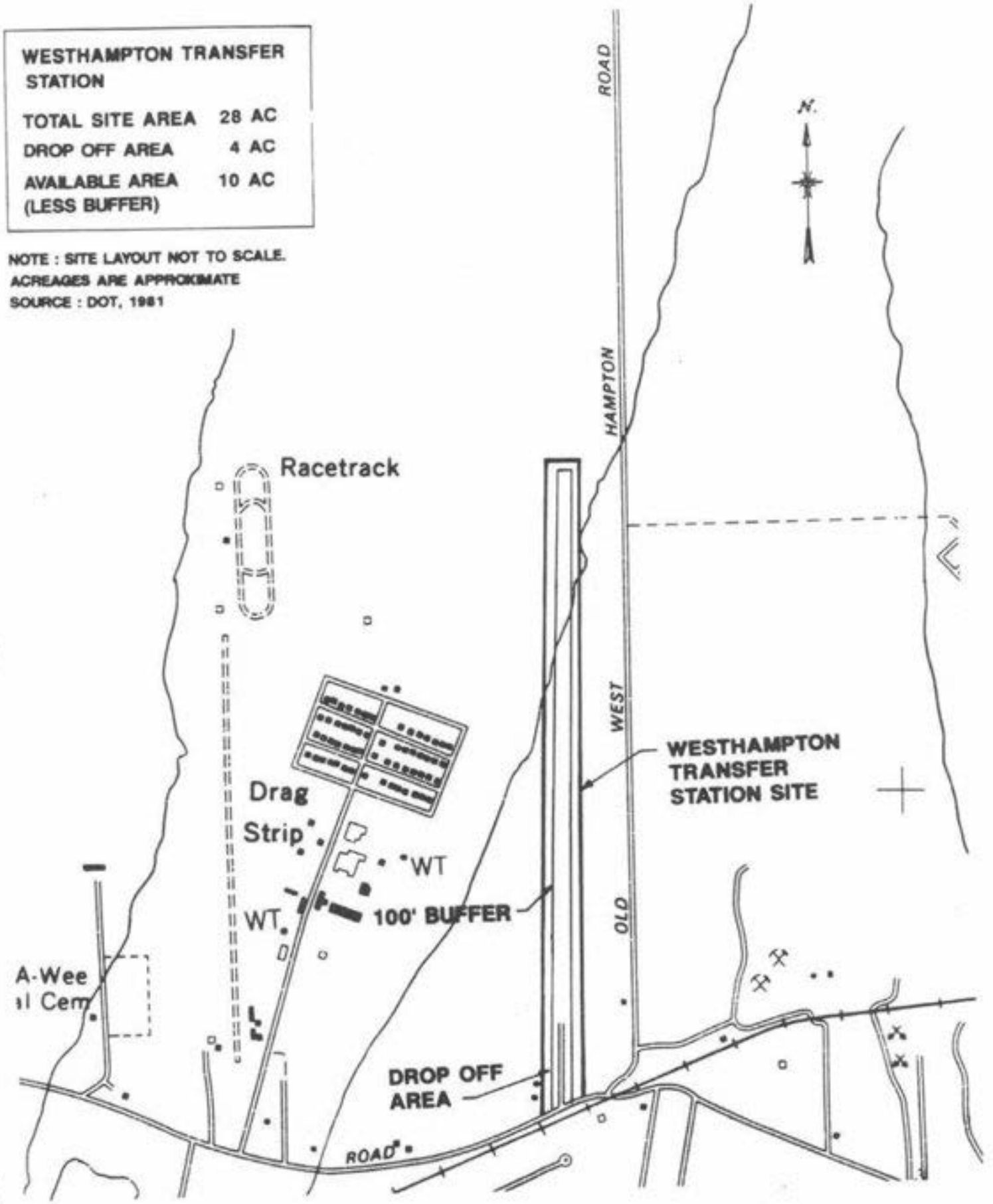

TOWN OF SOUTHAMPTON
SOLID WASTE ACTION MANAGEMENT PLAN
WESTHAMPTON TRANSFER STATION
SCALE 1" = 1000'

MALCOLM

FIGURE 10-3

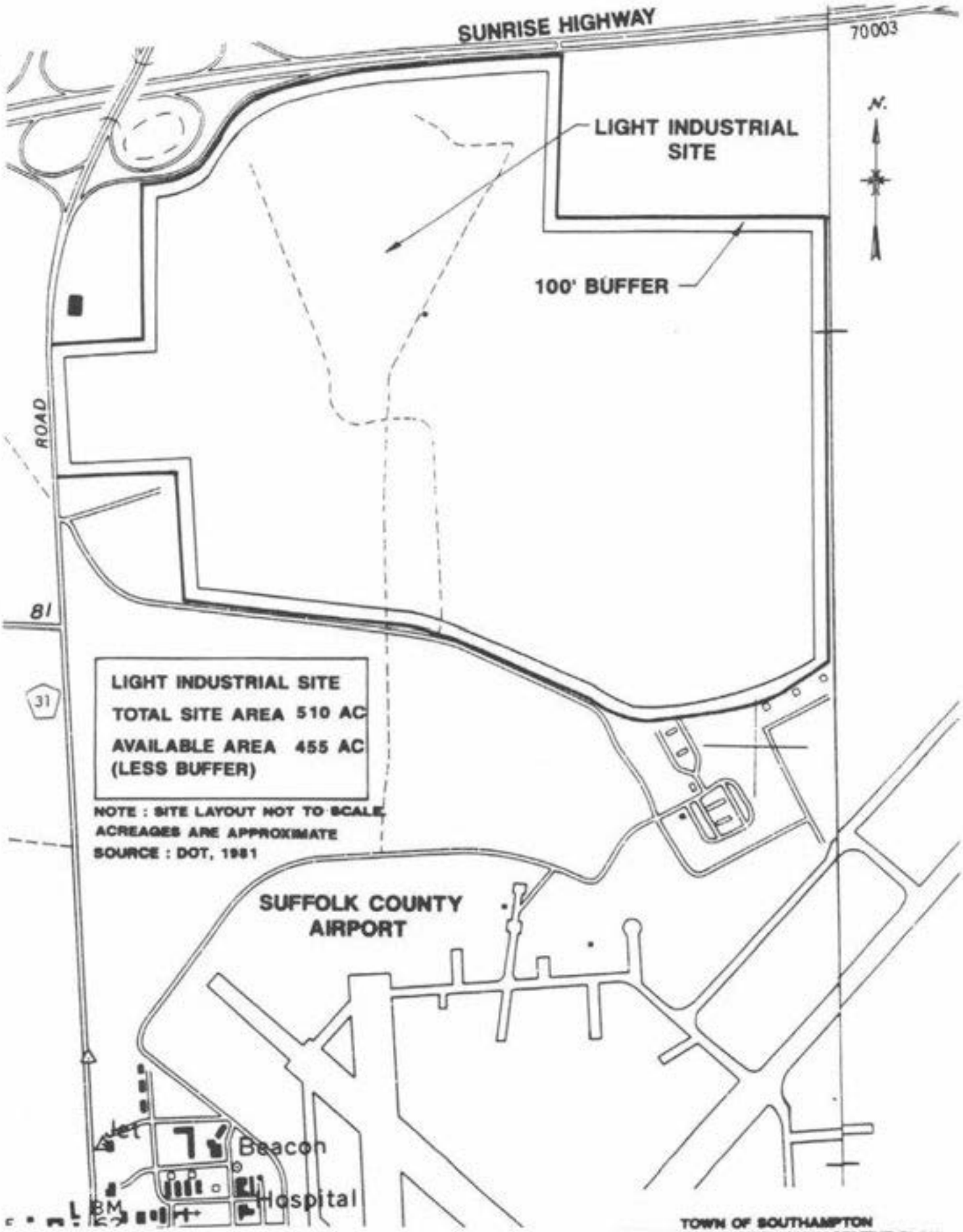

MALCOLM

TOWN OF SOUTHAMPTON
SOLID WASTE ACTION MANAGEMENT PLAN
LIGHT INDUSTRIAL SITE

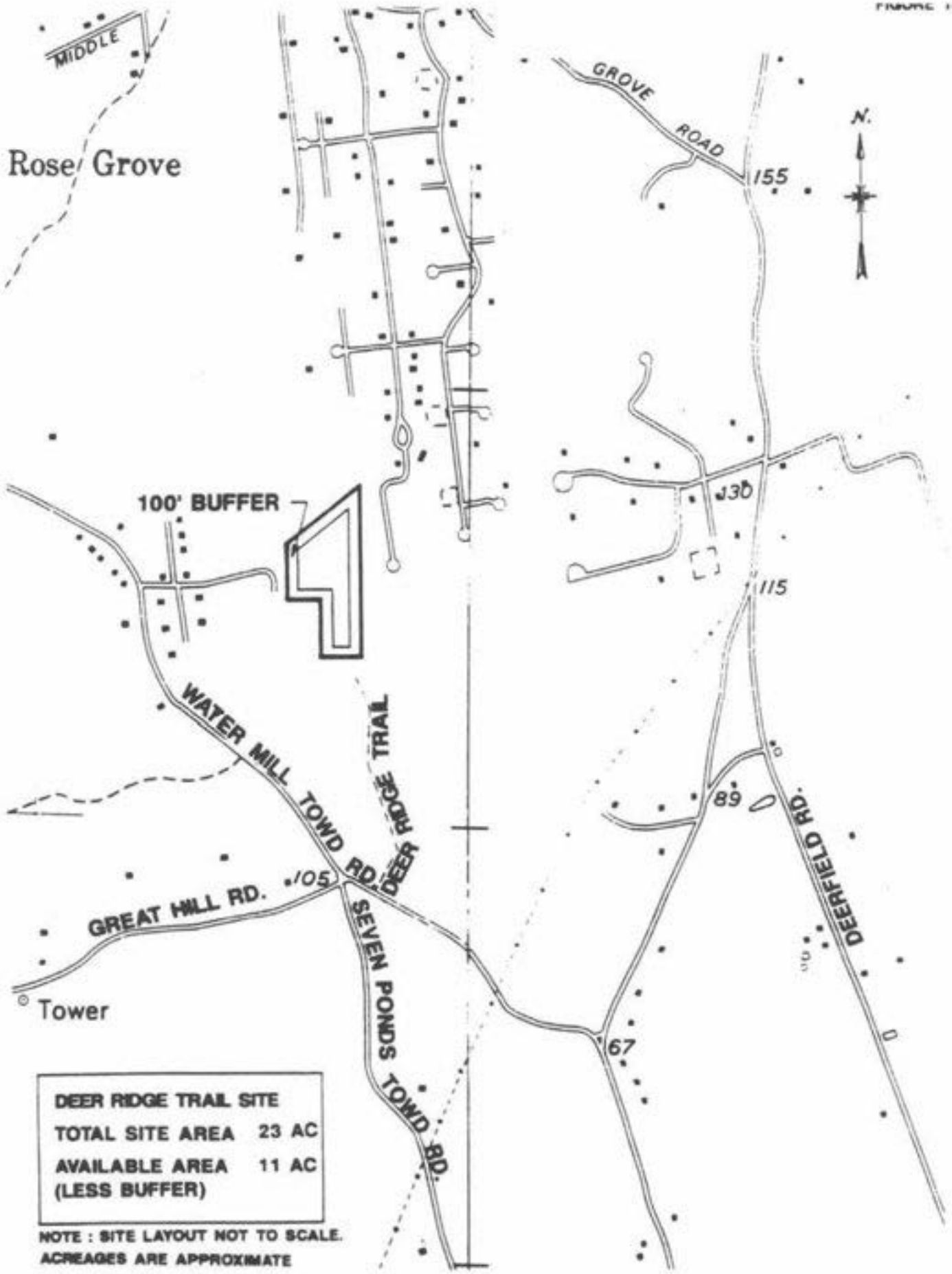

DEER RIDGE TRAIL SITE	
TOTAL SITE AREA	23 AC
AVAILABLE AREA (LESS BUFFER)	11 AC

NOTE : SITE LAYOUT NOT TO SCALE.
ACREAGES ARE APPROXIMATE
SOURCE : DOT, 1981

MALCOLM PIRNIE

TOWN OF SOUTHAMPTON
SOLID WASTE ACTION MANAGEMENT PLAN
DEER RIDGE TRAIL SITE
SCALE 1" = 1000'

10.4 QUALITATIVE SITE EVALUATION

Qualitative criteria have been identified to aid in selecting a preferred site for the proposed facilities from among the candidate sites identified in the exclusionary phase. These qualitative criteria will not necessarily eliminate any of the identified sites, but will assist in the development of a general description of the environmental conditions that exist at potential sites, and will serve as the basis for the selection of the preferred site(s). These qualitative criteria are:

- Deep Flow Recharge Area
- Pine Barrens Conservation Zone
- Tidal or Freshwater Wetlands
- Sensitive Habitats/Endangered Species
- Archaeological and Historical Resources
- Adjacent Land Use
- Site Access
- Site Acquisition Feasibility

The Deep Flow Recharge Area is the area of primary ground water recharge to aquifers below Suffolk County. This area is critical for maintenance of high quality ground water since these aquifers are designated as sole-source aquifers for water supply on Long Island. The specific boundaries of the Deep Flow Recharge Area, within the Town of Southampton, are delineated in the Suffolk County Department of Health Services Sanitary Code, Article 7. The Department of Health Services regulates development within the Deep Flow Recharge Area through permit requirements for water supply and wastewater disposal. Sites located outside of the Deep Flow Recharge Area will be considered more suitable for project development.

Several areas within the Town are designated as having ecological importance, and development should be limited or minimized in these areas. They include the Pine Barrens Conservation Zone, wetland areas and areas containing endangered theoretical species or significant habitats.

The Long Island Regional Planning Board, Pine Barrens Review Commission has defined the Pine Barrens Conservation Zone on the east end of Long Island including areas located within the Town. The Pine Barrens Conservation Zone has been protected because it is a unique habitat that supports numerous species of plants and wildlife and is also an area of

significant ground water recharge. Unplanned development within the Pine Barrens poses a significant threat to the natural resources and potential value of this area. This Conservation Zone overlies much of the Deep Flow Recharge Area, and is an important part of the hydrologic cycle. Actions within the Pine Barrens Conservation Zone must obtain approval from the Pine Barrens Review Commission.

Tidal and fresh water wetlands are regulated by the state and federal government. NYSDEC has mapped tidal wetlands and is in the process of preparing final freshwater wetland maps for the Town. The Town supports extensive areas of both fresh water and tidal wetlands. Wetland areas are a valuable natural habitat and provide benefits such as open space, storm and flood water control, education and research areas, fisheries habitat, water supply purification, wildlife habitats and recreational opportunities.

The State maintains a list of endangered and threatened animal and plant species. These species are protected by the NYSDEC and the State Environmental Conservation Law, Section 11-0535 (Endangered and Threatened). Significant habitats are defined by NYSDEC as a specific place, area, or location in New York State that has a value for fish or wildlife extending beyond its own border. NYSDEC currently lists 28 significant habitat areas within the Town (See Section 4.7.5, Significant Habitats).

Due to the biological/ecological merits of these designated areas, sites within the Pine Barren Conservation Zone or sites that support threatened or endangered species, wetlands or significant habitats are considered less favorable for development as a solid waste management facility.

Proximity of and impacts to landmarks of cultural significance such as those having historical or archaeological value should be considered in evaluating feasibility of site development. Detailed cultural resource surveys involving two stages of investigation are required if an archaeological or historic site is included within a proposed project area. If unrecorded resources are found during construction, site activities will have to be halted until appropriate investigations are conducted. If there are known historical or archaeological resources on

a site, that site will be considered less suitable for project development.

The land use adjacent to the identified sites must also be considered during the selection of appropriate sites for the mixed waste processing facility and the materials recovery facility. To the greatest extent possible, adjacent land use should be consistent with the proposed site development.

The construction of roadways capable of providing adequate facility access to a site can cause unacceptable delays in the implementation of a facility. Therefore, sites with existing access capable of supporting heavy truck usage are more suitable for facility development.

The costs associated with site acquisition and site preparation, including road construction and blasting, are important factors to consider in the selection of a preferred site. Sites that are already owned by the Town or that require little site preparation will be considered more suitable for project implementation.

10.5 RESULTS AND RECOMMENDATIONS

10.5.1 Mixed Waste Processing Facility

Two sites with sufficient acreage to support a mixed waste processing facility have been identified as a result of this site evaluation: the existing Landfill site and a light-industrial-zoned area located north of the Suffolk County Airport.

The Landfill site is already owned by the Town, and therefore no site acquisition costs would be incurred. It is located outside of the Deep Flow Recharge Area and the pine barrens conservation zone. Although the proposed development is inconsistent with the adjacent residential land use, project implementation is not expected to exacerbate existing conditions since the site is currently utilized for solid waste management activities. Site access at the Landfill is sufficient for the proposed usage since the roadways leading to the site currently support solid waste hauling vehicles. The Landfill site does not contain any significant habitats nor have any endangered species been identified on site. Based

on the National Registry of Historic Places listing no historic resources have been identified on the site.

The light industrial site is privately owned and site acquisition costs are not currently available for this site. Although site acquisition costs are not known at this time, these costs may be high given general real estate trends in the area. The site is located within both the Deep Flow Recharge Area and the Pine Barrens Conservation Zone. The site falls within an area that has been designated as a significant habitat for endangered species including, but not limited to, the northern harrier and dwarf pine. There are no State regulated wetlands or no known historic resources on the site. The site is north of the Suffolk County Airport and development at this site may be subject to FAA restrictions. Site access does not currently exist.

Based upon the findings of this analysis, the Landfill site is the preferred site for the mixed waste processing facility. The light-industrial site is considerably less favorable for development because it is within both the Deep Flow Recharge Area and Pine Barrens Conservation Zone and endangered species have been identified on the site. Costs associated with site acquisition and access road development may also be high.

10.5.2 Materials Recovery Facility

Based on this siting study, four sites have been identified as potential locations for a materials recovery facility. These sites include the sites that have been identified as potential mixed waste processing facility sites, the existing Hampton Bays Transfer Station and a parcel of Town-owned land located in the northeastern section of the Town.

As a result of discussions between the East End Recycling Association and Suffolk County, a fifth site in the Town has been identified as a candidate site for a materials recovery facility. The proposed site is located adjacent to the railroad in the southeast corner of the Suffolk County airport in Westhampton. On a directive from the Suffolk County legislature, the LIRPB is developing a facilities plan for approximately 1000 acres at the airport. Based on discussions with LIRPB, development

of a MRF on the airport property has been deemed acceptable and compatible with the current and proposed uses of the airport.

The conceptual plan includes the lease of five acres to the Recycling Association by the County, although additional acreage may be available if more land is required. Implementation of the site would most likely require access roadway and site development improvements. The siting study designated 10 acres as the required parcel size for a MRF. This is to allow for sufficient space for all activities related to the facility including truck queuing and material storage. Although the airport site is currently proposed to encompass 5 acres, the existing access road from Old Riverhead Road (Rt 31) to the site extends for approximately one mile which may serve as queuing for trucks entering the facility during peak hours.

10.6 SUMMARY

Based upon this siting analysis, the Landfill site is the preferred site for the mixed waste processing facility. The light-industrial site is considerably less favorable for development due to environmental significance and the potential cost requirements.

Three candidate sites remain as potentially suitable for development of a MRF. These include the two sites identified in this siting study and the site at the Suffolk County Airport under consideration by the East End Recycling Association and evaluated by the LIRPB.

10.0R SITE SELECTION

Based upon the analysis previously performed in the Original SWAMP, the North Sea Landfill remains the preferred site for the transfer operation, pre-processing system, leaf and yard waste composting and organic materials composting system.

11.0 IMPLEMENTATION

11.1 RECYCLING PROGRAM IMPLEMENTATION

In Section 9.1, Recycling Program Recommendations, the preferred course of action is presented along with suggested variations and alternatives that will permit adjustment and allow for the most economical methods to be used. The Town recognizes that implementing the recycling program is a dynamic process and it is necessary for a flexible approach to be taken that will allow for timely phasing of the program.

Initially, the Town will implement the program by taking the following steps:

- The Town will implement the 1989 Recycling Plan (presented in Appendix D) in compliance with the Consent Order and in preparation for the long-term program.

- The Town will establish a Southampton recycling program working group responsible for overseeing the recycling activities within Southampton on a day to day basis. The working group will consist of designated Town Board member(s), the Town Supervisor and the director of the Sanitation Department. A Town Recycling Coordinator may be necessary to manage the expanding recycling program, however, it is possible that the E2RA coordinator can undertake these duties.

- The Town will move to establish a pilot yard waste composting program.

- The role of E2RA will be clearly defined in terms of how its efforts will be integrated with existing town recycling programs. Specifically, the E2RA Recycling Manager's duties and promotional activities must be further defined.

- The East End Towns must move forward in establishing the feasibility of, and a specific implementation approach for a regional MRF. If E2RA is to be empowered to carry out this task, the appropriate town approvals and agreements must be given, and adequate funding must be established to carry out a feasibility study and procurement.

- Cooperative regional efforts will be solidified as soon as possible with intermunicipal agreements and appropriate funding.

At an appropriate time, probably during the first or second quarter of 1990, the Town Board will reevaluate progress on the initiatives described above and consider the need to adopt alternative approaches. Reevaluations may be necessary periodically in the future. A schedule outlining approximate timing required to implement the program is presented in Section 11.4.

11.2 MIXED WASTE PROCESSING PROGRAM IMPLEMENTATION

Implementation of the mixed waste processing program includes the six major milestones listed in Table 11-1.

This draft SWAMP addresses current waste management practices, materials and energy market analysis, review and selection of the technology, site selection, permitting review, and implementation approach analysis.

The quantities and characteristics of the waste are discussed in Section 3.0, but it was necessary to utilize data from other areas to construct a more complete estimate of the composition of the solid waste stream. Accordingly, it may be advisable for the Town to conduct a more complete waste composition study so that the composition of recyclables in the Southampton waste stream can be analyzed.

If an in-Town approach is selected, the Town should develop a Request for Proposals (RFP) under GML 120-w (competitive negotiated procurement) that allows vendors to be responsive in proposing a mixed waste processing facility, and/or a combined mixed waste and recyclables facility. Participation in a regional facility would require the development of a contractual agreement. The Town of Southampton would have to carefully develop the contractual arrangements as to preclude any unwarranted costs to the Town and minimize the risks.

11.3 REGULATORY REQUIREMENTS

The action proposed in this GEIS must comply with applicable environmental laws and regulations of all federal, State, county, and local agencies having jurisdiction over the proposed action. The agencies

TABLE 11-1

IMPLEMENTATION MILESTONES
MIXED WASTE PROCESSING FACILITY

Project Feasibility Analysis (completed in this report):

Solid Waste Stream Quantification and Characterization
Current Solid Waste Management Practices Analysis
Material and Energy Market Analysis
Review and Selection of the Technology
Siting Study
Implementation Approach Analysis
Hold Public Hearing and Reach Final Decision

Brookhaven Regional Approach Assessment (next step):

Assess Economics and Feasibility of Proposal
Negotiate Intertown Agreement
If Proposal is Acceptable, Entiner into
Agreementwith Brookhaven
Proceed to Next Steps if Appropriate

Procurement, SEQR Process Financing (as necessary):

Investigate Materials and Compost Markets
Initiate a Solid Waste Stream Flow Control Law
Determine Permit Application Procedures
Develop a detailed RFP and Draft Contract for the Proposed Mixed Waste Facility and Solicit Bids from Qualified Vendors
Evaluate Proposal and Develop a Negotiating Posture
Prepare a Draft EIS for the Specific Project Proposed at the Landfill Site
Negotiate and Award Contract
Develop Financing and Bonding

Permitting (as necessary):

Prepare the Required Permits for the Project
Conduct Public Hearings and Secure DEC Approvals

Construction (as necessary):

Site Preparation
Final Design
Specify and Order Equipment
Contract Facility and Install Equipment
Startup and Acceptance Testing
Certificate of Completion

TABLE 11-1 (continued)

IMPLEMENTATION MILESTONES
MIXED WASTE PROCESSING FACILITY

Operation (as necessary):

Tipping Fees
Escalation Rates
Service Fee Payment
Periodic Testing

that may be involved in the project review include the Federal Aviation Administration (FAA), United States Environmental Protection Agency (USEPA), New York State Department of Environmental Conservation (NYSDEC), New York State Department of Transportation (NYSDOT), Suffolk County Department of Health Services (DOHS), and the Southampton Planning Board and Building Inspector. A representative list of the major permits, certifications, and reviews that may be required for the implementation of the proposed solid waste facilities is contained in Table 11-2. Each of the permits is discussed below. Several permits required for each facility are site- and technology-specific.

11.3.1 Federal Permits/Approvals

Federal Aviation Administration Regulations - The FAA requires an approval for any proposed construction or alteration of a structure that may interfere with air traffic or radio and radar communications. This would apply if a facility is located in close proximity to an airport. Based on information provided in the Part 77 Permit Application, the FAA would conduct an aeronautical study to determine whether the proposed facilities would represent a hazard to air navigation. That study would consider flight paths of aircraft traveling in the vicinity of the site, as well as major airport flight routes, and the potential for bird hazards. Since the mixed waste processing facility proposed for the landfill site is greater than three miles from an airport, it will not require a FAA permit. The need for an FAA approval for the materials recovery facility will be dependent on the site chosen, but is not expected to be an issue, since recyclables are not likely to attract birds.

11.3.2 State Permits/Approvals

Certain permits required by the Environmental Conservation Law must follow application requirements as delineated in Title 6 NYCRR Part 621 Uniform Procedures and hearing procedures contained in Part 624.

State Environmental Quality Review Act - In accordance with the requirements of the New York State Environmental Quality Review (SEQR)

Act, and specifically Environmental Conservation Law Article 8 and Title 6 NYCRR Part 617.15, all actions that may have a significant effect on the environment must be preceded by preparation of an environmental impact statement (EIS) to review potential effects associated with its implementation. The Generic EIS (GEIS), presented herein, provides a means for agencies to give early consideration to environmental factors, as well as social and economic issues, by reviewing the conceptual framework of the proposed action. Additionally, it represents a means for project sponsors to systematically consider these aspects in project planning and design, and for project sponsors to identify the criteria that will be utilized in selecting a site and a technology. Once the GEIS has been accepted, a more detailed site- and technology-specific environmental impact statement (EIS) for implementation of the selected project will be required.

Solid Waste Management Permit - In accordance with the Environmental Conservation Law Article 27 and pursuant to 6 NYCRR Part 360, proposed solid waste facilities to be constructed and operated in New York State require a Part 360 permit to construct and a certificate to operate. Recycling facilities greater than 5 tpd also require a Part 360 permit. However, recycling facilities with an average daily throughput of between 5 and 50 tpd may be exempt from requiring a permit if certain conditions are met. The submissions that accompany the construction permit application are extensive and include maps and plans; a description of the proposed plan of operation; analyses of financial data, economic conditions, and marketability of recovered materials; and construction plans and schedules.

In addition to the above requirements, the NYSDEC has the jurisdiction to regulate the prevention or reduction of impacts on water, air, noise, odors, and aesthetic conditions to ensure the public health, safety, and welfare is maintained. The proposed facilities will comply with these specifications.

The Part 360 permit review process also considers such factors as traffic and adjacent land use and requires demonstration that the facility is consistent with the State-approved solid waste management plans for the

TABLE 11-2

SUMMARY OF RELEVANT REGULATORY REQUIREMENTS FOR THE PROPOSED SOLID WASTE MANAGEMENT FACILITIES

Regulatory Program	Responsible Agency/Party	Comment
Federal		
Construction Notice	FAA	Would apply if facility is within the three miles of airport, or if obstruction standards in FAA Part 77, subpart C are exceeded.
State		
Solid Waste Management Permit	NYSDEC	Would apply for all solid waste facilities except for recycling facility less than 5 tpd or up to 50 tpd if certain conditions are met.
SEQR Process	Town of Southampton	Would apply.
SPDES Permit	NYSDEC	Would apply only if discharging to surface waters. (Not expected)
Highway Access Permit	NYSDOT	Would apply if facility is built along State Highway.
Long Island Well Permit	NYSDEC	Would apply if a water supply well with capacity in excess of 45 gpm is required.
County		
Septic System Permit	Suffolk County DOHS	Would apply if septic system is required.
Water Supply Approval	Suffolk County DOHS	Would apply if surface or ground water is diverted for use.

region. This demonstration must include justification of facility need, description and control of inter- or intra-district waste flow agreements, and discussion of overall facility implementation and management.

State Pollution Discharge Elimination System (SPDES) Permit - Environmental Conservation Law Article 17 and implementing regulations 6 NYCRR Part 750 provide the NYSDEC with authority to review and approve proposed new point source discharges of wastewater, including storm water, process, and thermal discharges. Potential wastewater sources may include leachate from composting or processing facilities and collected storm water runoff. If these wastewaters are treated and discharged to surface or ground waters, this permit would be required. The effluent must be in compliance with federal and State effluent standards, when applicable. In addition, a brief description of the principal types of processing done at the facility would be required, as well as the specific chemical constituents of the discharge, if any.

Highway Access Permit - This permit is required by the NYSDOT for facilities that are developed along a State highway. This permit will not be required for the mixed waste processing facility to be located at the existing landfill site.

Long Island Well Permit - Installation of water supply wells with capacities in excess of 45 gpm in Suffolk County require a Long Island Well Permit. If the facility utilizes on-site wells for water supply during operations, this capacity may be exceeded and a permit would be required. The Landfill site is served by a public water supply line and therefore the mixed waste processing facility would not require a well permit.

11.3.3 County Permits

A septic system permit would be required by the Suffolk County Department of Health Services if a septic system is to be developed.

11.4 SCHEDULE

As discussed in Section 5.0, Integrated Solid Waste Management Concepts, the preferred solid waste management system for the Town involves a combination of recycling programs, mixed waste processing facilities and landfilling of residual wastes. The projected schedule for implementing the integrated system components. As indicated, possible regional alternatives will be explored in conjunction with proceeding with in-Town alternatives for both mixed waste processing and the materials recovery facility. Proposed schedules for facilities procurement and project specific EIS and permitting are also presented on Figure 11-1; but these activities may change depending on the possible development and evaluation of a regional approach and discussions with DEC regarding a Long Island Landfill Law Extension. Figure 11-1 illustrates the major phases associated with these programs. In implementing the project, there are five milestones: project feasibility analysis, procurement and financing, permitting, construction, and operation. It should be noted that the schedule in Figure 11-1 represents a "fast-track" approach to implementation with a number of activities moving forward in parallel with one another. For example, the development and implementation of the Town's mandatory recycling program is being undertaken at the same time as the SWAMP/GEIS was being developed and Cell No. 3 at the Landfill was being constructed.

As the Town proceeds with the phases of the program identified in Figure 11-1, it will be necessary to consider the issues discussed in this section of the GEIS. The approach to be taken to each for the following areas will impact the development of the Town's program:

- Solid waste stream flow control
- Facility procurement
- Facility ownership
- Financing and funding.

11.4.1 Source Separation Recycling Program Goals Schedule

The Town's Recycling program goals schedule presented in Table 11-3 was devised in accordance with the goals for solid waste management set

FIGURE 11-1

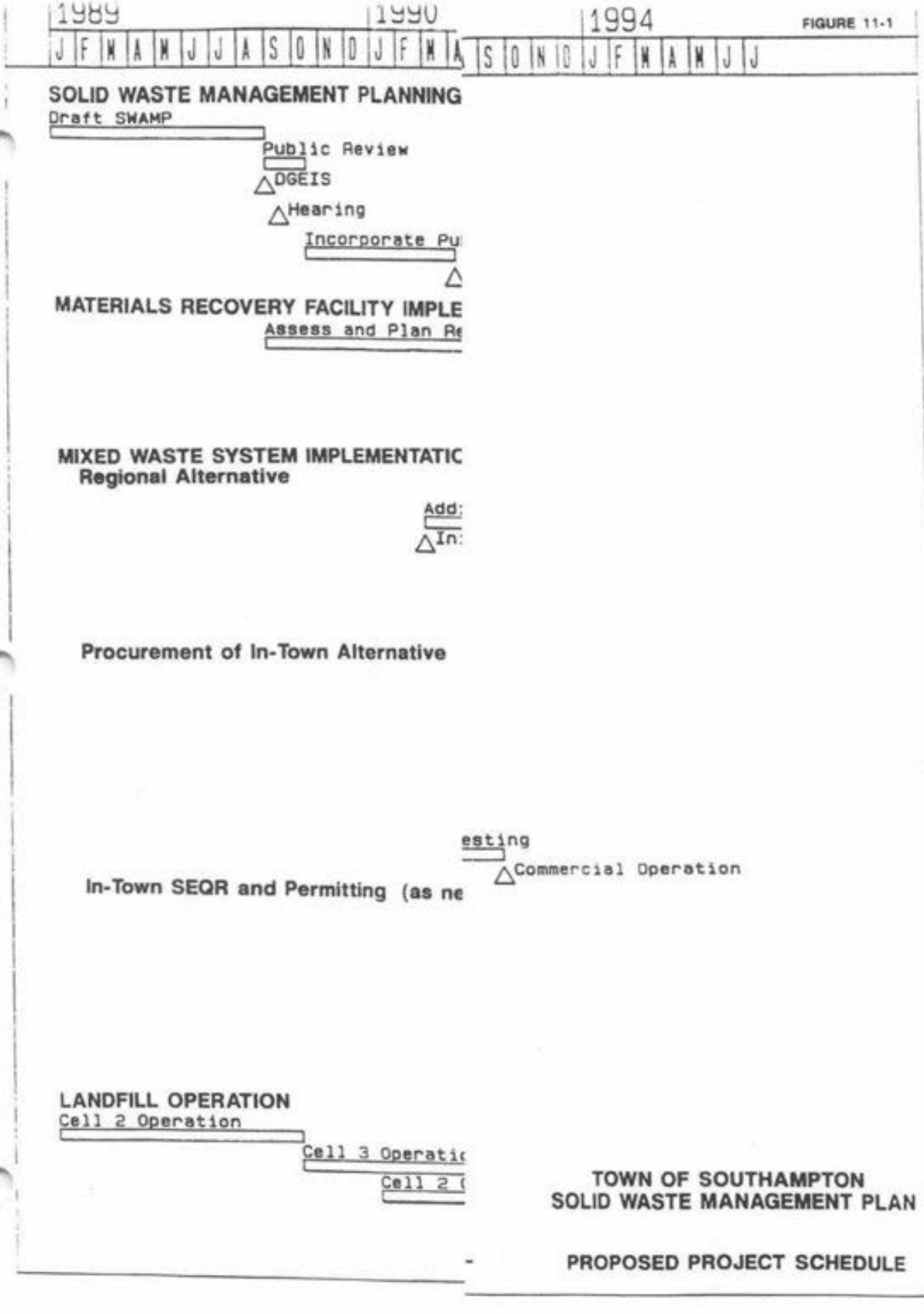

TOWN OF SOUTHAMPTON
SOLID WASTE MANAGEMENT PLAN

PROPOSED PROJECT SCHEDULE

forth in the New York State Solid Waste Management Plan and 6NYCRR Part 360-1.9(f). This schedule details year by year, progressively increasing, percentages of the waste stream that are targeted for recycling. Also shown are specific improvement and expansion activities that will be implemented to progressively increase the percentage of the waste stream recycled.

It is important to note that, as recognized by the NYSSWMP and as explained in this GEIS, recycling 40 percent or more of the waste stream by 1997 is a goal. Achieving this goal is contingent on a wide variety of variables including market conditions (whether sufficient economic markets exist), public participation and County, State and Federal action.

TABLE 11-3

TOWN OF SOUTHAMPTON
SOURCE SEPARATION RECYCLING PROGRAM
GOALS SCHEDULE

Activities - 1988	Recycling Goal*
- Continued voluntary recycling programs for the following materials: newsprint, cardboard, clear glass, green glass, brown glass, cans and scrap metal and oil. Approximately 3.0% of the total waste stream was recycled through this effort.	7.0% achieved
- Continued existing leaf and yard waste storage at all transfer stations and and at the landfill. Approximately 4.0% of the total waste stream was diverted through this effort.	
- Continued stockpiling and marketing of white goods and tires at the Landfill.	
- Interfaced with other Eastern Long Island towns to promote a regionalized approach to recycling.	
- Initiated a public promotion campaign including the distribution of bumper stickers throughout the Town.	
- Funded a separate study to analyze the municipal waste stream.	
- Estimated initial equipment needs and budget.	
- Initiated consultant services to draft a Solid Waste Action Plan (SWAMP) study to explore solid waste management alternatives applicable to the Town.	
- Pursued funding through the following channels: - The Town of Southampton Conservation Board submitted an application to the NYSDEC for a Community Assistance Competitive Grant (August, 1988).	

*Percent of the total waste stream.

TABLE 11-3 (continued)

TOWN OF SOUTHAMPTON
SOURCE SEPARATION RECYCLING PROGRAM
GOALS SCHEDULE

Activities - 1988 (continued)	Recycling Goal
- Applied to the NYSDEC for a permanent S.T.O.P facility (September, 1988).	
- Submitted a NYSDEC LRRRP grant application to request funding for a regional recycling manager and for promotion/education activities (October, 1988).	
Activities - 1989	**Recycling Goal**
- Implement phased 1989 Recycling Plan for significant expansion and improvements to the existing program.	10-12%
- Phase I: Enacted mandatory source separation ordinance for newspapers, scrap metal and yard waste effective June 15, 1989.	
- Phase II: Amend ordinance to include cans, glass, corrugated cardboard and office paper by December of 1989.	
- Expand public education program to increase participation with:	
- Two newsletters on the new recycling measures and solid waste management planning distributed to all residents and businesses.	
- Instructional "how to" participate flyers and mailers distributed to residents for each new program phase as it is implemented.	
- Biweekly press releases and other periodic media contacts publicizing the Town's recycling activities.	

TABLE 11-3 (continued)

TOWN OF SOUTHAMPTON
SOURCE SEPARATION RECYCLING PROGRAM
GOALS SCHEDULE

Activities - 1989 (continued)	Recycling Goal
- Private haulers begin curbside collection June 15, 1989.	
- Construct bi-level drop-off center at the Landfill for easy unloading by private haulers an self-haulers.	
- Promote private efforts to recycle cardboard and office paper prior to enactment of mandatory recycling of these materials.	
- E2RA hires Recycling Manager and commences promotional activities.	
- Negotiate with other towns to initiate regional approaches for materials processing and marketing.	
- Initiate separated organics pilot composting project at the Town Landfill.	
- Evaluate plastics test program already underway and identify ways to increase plastics diversion through better promotion and collection and develop plastics markets.	
- Procure agreement for processing commingled cans and glass at an existing facility during the interim prior to implementation of a regional MRF.	

TABLE 11-3 (continued)

TOWN OF SOUTHAMPTON
SOURCE SEPARATION RECYCLING PROGRAM
GOALS SCHEDULE

Activities - 1990	Recycling Goal
- The full effects of the 1989 Recycling Plan for newspaper, cardboard, cans, glass, scrap metal and office paper will be felt most strongly in 1990 since many improvements are implemented at the end of 1989.	12-15%
- Expand public education programs with general recycling promotion by E2RA and supplementary local public education by the Town regarding collection schedules and new initiatives.	
- Implement improvements for increasing plastics recycling.	
- Initiate distribution of household recycling containers to residents for curbside collection of commingled materials.	
- Commence enforcement of mandatory source separation ordinance if participation is not up to sufficient levels.	
- Evaluate economic incentives for recycling and initiate disposal fee changes.	
- Evaluate additional drop-off center improvements.	
- All five town boards develop a memorandum of understanding and grant approval and appropriate funding for E2RA development of the regional MRF.	
- E2RA initiates a feasibility study for regional MRF leading to a decision on procurement approach, financing, etc.	

TABLE 11-3 (continued)

TOWN OF SOUTHAMPTON
SOURCE SEPARATION RECYCLING PROGRAM
GOALS SCHEDULE

Activities - 1990 (continued)	Recycling Goal
- Based on the feasibility study, E2RA will commence procurement of the regional MRF with the potential for starting construction by the end of the year.	
- Continue marketing commingled materials to an existing MRF.	
- Continue operation of the composting pilot project and expand to include brush processing.	
- Make decision regarding a long-term approach to separated organics composting (alone or with mixed wastes) and commence procurement procedures.	
- Improve materials marketing through expanded contacts with brokers in the region.	
- Establish Suffolk County Marketing Cooperative organization and potentially the cooperative will commence marketing for the Town before the end of the year.	
- Continue to evaluate economic feasibility of adding other materials to the Town's program such as textiles, mixed paper, various plastics types and what ever other materials become recyclable in the future.	

MALCOLM PIRNIE

TABLE 11-3 (continued)

TOWN OF SOUTHAMPTON
SOURCE SEPARATION RECYCLING PROGRAM
GOALS SCHEDULE

New Activities - 1991	Recycling Goal
- Amend mandatory source separation ordinance to include recyclable plastics.	15-20%
- Include recyclable plastics in commingled materials collection stream.	
- Initiate recycling of other materials for which recycling is economically feasible and continue to evaluate the potential of other materials.	
- Complete distribution of household recycling containers to all households.	
- Enforce the source separation ordinances if participation rates are low.	
- Continue public education programs and expand to promote new initiatives.	
- Construction of the E2RA MRF is projected to begin this year.	
- Possibility of commencing construction of the long-term composting facility for separated organics.	
- The Suffolk County marketing cooperative continues or begins to market the Town's recyclables.	

New Activities - 1992	Recycling Goal
- Continue all programs initiated in previous years.	20-25%
- Amend mandatory source separation ordinance, if necessary, to include all new materials for which economic markets exist.	

TABLE 11-3 (continued)

TOWN OF SOUTHAMPTON
SOURCE SEPARATION RECYCLING PROGRAM
GOALS SCHEDULE

New Activities - 1992 (continued)

- Potential for commencement of mixed waste processing for recovery of additional recyclables quantities.
- Full operation of the E2RA MRF to process materials for increased efficiency.

Long Term Activities (1993-1997)	Recycling Goal
- To achieve or exceed the 40 percent recycling goal, attempt to increase participation and add other materials to the program for which economic markets.	25-40%
- Extract additional recyclables from the mixed waste stream through mixed waste processing.	
- Continue the reexamine goals and objectives and, if necessary, restructure the program.	

11.0R IMPLEMENTATION

This entire section has been revised to reflect additional initiatives that have taken place since the Original SWAMP was issued and the refined approach the Town plans on following as described in previous chapters of this Revised SWAMP.

11.1R WASTE REDUCTION AND RECYCLING PROGRAMS

The Town of Southampton has implemented a mandatory recycling program for newspapers, corrugated cardboard, mixed paper, PET and HDPE plastics, aluminum and tin cans, and clear, brown and green glass. This program applies to both the residential and commercial sectors. The Town also recycles white goods, tires, used motor oil and leaf and yard wastes. In addition, a permanent household hazardous waste program (S.T.O.P.) was instituted in 1991, so that residents could safely dispose of their lawn and garden products, household cleaners and paints, automotive products and other hazardous products typically found in the home. These materials are classified and consolidated by type, and transferred out of Town for disposal. Violations of the Town's recycling law are subject to increasingly stringent fines.

The recyclables drop-off program has proven to be extremely successful, as a result of continued educational efforts and programs initiated with the private haulers to facilitate curbside collection of these materials. Commercial establishments have been encouraged to expand their in-house reuse and recycling capability. Quantities of source separated recyclables received by the Town have increased from about 1100 tons in 1987, to over 5,000 tons in 1991.

The Town plans to continue to operate its drop-off facilities for recyclables, and will continue marketing these materials on a spot-market basis. They have recently added junk mail and low grade paper to the list of materials collected. Once the recommended solid waste management plan is implemented, source-separated food wastes, soiled paper, leaf and yard wastes and other organic materials will also be collected and diverted from the landfill.

Southampton will continually evaluate the success of its recycling program, and will add additional materials to the mandatory list, as deemed appropriate.

The Town has actively promoted home composting and environmentally aware consumer purchasing. The Town will continue to expand these programs via additional educational efforts and legislation.

11.2R COMPOSTING AND MIXED WASTE PROCESSING PROGRAM IMPLEMENTATION

Implementation of the composting and mixed waste processing program includes the major activities outlined in Table 11-1R. The program is anticipated to be operational in early 1995.

11.3R REGULATORY REQUIREMENTS

The regulatory requirements, as outlined in the Original SWAMP, are applicable to the preferred solid waste management alternative recommended in this Revised document.

11.4R SCHEDULE

The preferred solid waste management system for the Town of Southampton involves a combination of expanded recycling programs, composting of leaf and yard waste, composting of source-separated organics, pre-processing of mixed waste, with composting a portion of this stream during the off-peak season, and landfilling of residual wastes. The proposed schedule for procurement of the system components, project specific EIS and associated permitting are presented on Figure 11-1R, Proposed Project Schedule.

The Town's waste reduction and recycling goals are presented in Table 11-2R. This Table details the progressively increasing percentages of the total waste stream which will be removed via waste reduction and recycling mechanisms. As shown by this table, the Town of Southampton's goals will exceed the statewide goal of recycling at least 40 percent of the waste stream by 1997. By the year 2010, realistic estimates indicate that the Town will be recycling approximately 75% of its waste stream, and an additional 10% will never be landfilled as a result of waste reduction measures.

TABLE 11-1R

TOWN OF SOUTHAMPTON
COMPOSTING AND MIXED WASTE PROCESSING
IMPLEMENTATION SCHEDULE

Activity	Targeted Dates
Source separation, waste reduction, education and enforcement activities	On-going
Submit Cell 3 renewal Petition to NYSDEC (Petition)	July 1, 1992
Submit amended Solid Waste Action Management Plan (SWAMP) to NYSDEC	September 1992
Approval of SWAMP and Petition	NYSDEC Action
Issue draft procurement documents for Integrated Recycling and Composting Facility (Facility)[1]	2 months after NYSDEC approval of SWAMP/Petition
Issue final procurement documents for Facility[1]	3 months after issuance of draft procurement document
Award contract for Facility[2]	3 months after receipt of proposals
Submit permit application for Facility[3]	2 months after Contract award
Receive Permit to Construct	NYSDEC action
Construction period	15 months commencing on receipt of permit
Operation	Upon completion of construction and receipt of a permit to operate
EIS/permitting of Cell 4	1993-1994
Construction of Cell 4	1994-1995

Notes:

(1) Assumes Facility will be procured via General Municipal Law 120-w which requires issuance of a draft request for proposals (RFP) for a 60-day review and comment period, followed by the issuance of the final RFP. Alternatively, the Town may choose to procure the Facility via a conventional public works process in compliance with General Municipal Law 103-d, whereby the 60-day review and comment period is not required. Under Section 103, the Town would issue facility drawings and specifications for bidding. An award will be made to the lowest, most responsible bidder.

(2) Under the 120-w process, the Town will enter into negotiations with a vendor and execute a contract. It should be recognized that contract negotiations cannot have a fixed end date since it would place the Town at a disadvantage during negotiations. Therefore, the schedule is subject to change based on contract negotiations. Under Section 103, such negotiations would be minimized.

(3) Schedule assumes that the Facility would receive a Negative Declaration under the New York State Environmental Quality Review Act (6 NYCRR Part 617). If an EIS is required, the overall schedule could be extended by approximately one year.

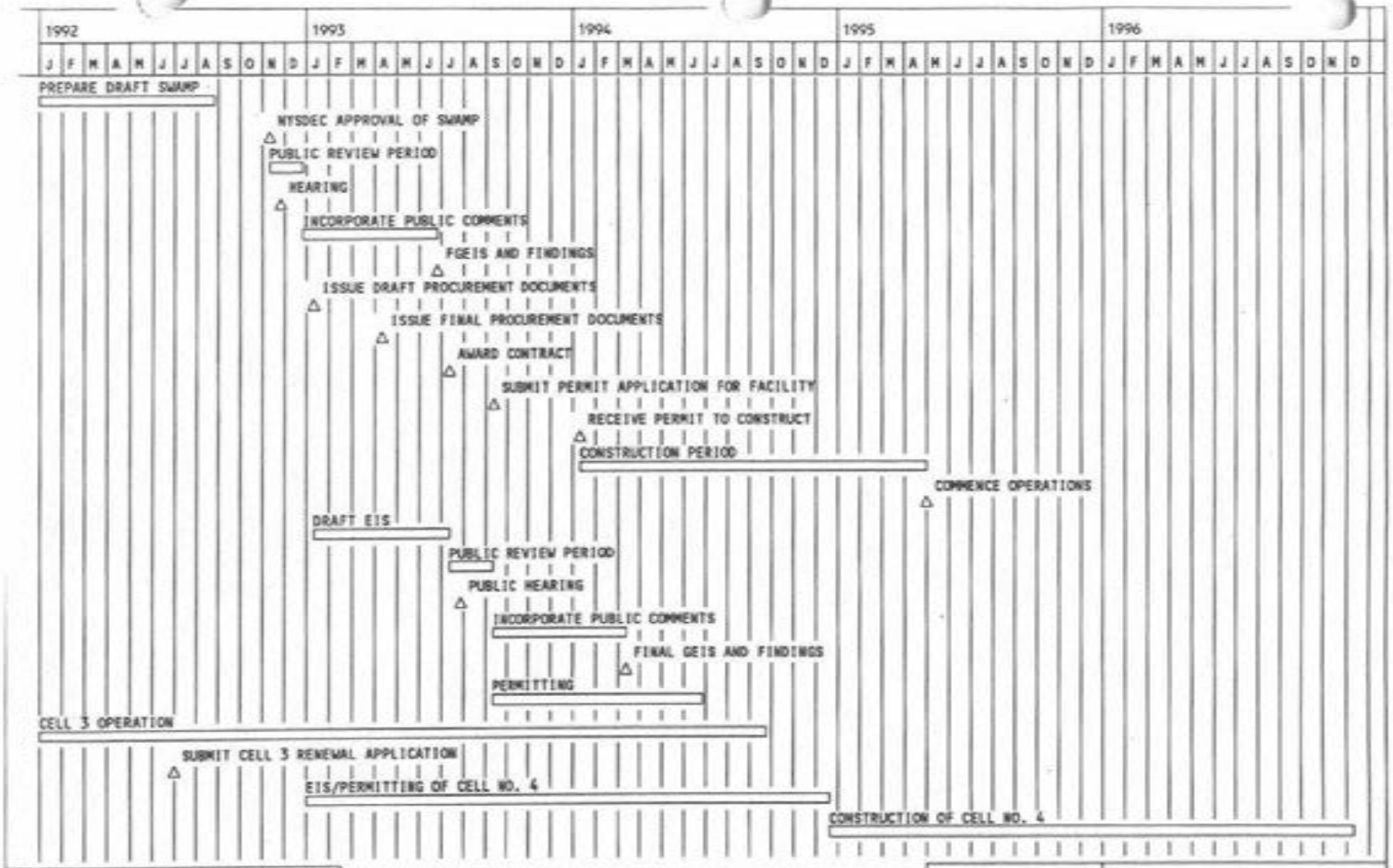

LEGEND

DESC PROGRESS

MILESTONE

RUN DATE 24AUG92

REVISION NO 0

START DATE 01JAN92

FILE NAME: IMPL

SURETRAK

Figure 11-1 R

Town of Southampton

Solid Waste Action Mgmt Plan

Proposed Project Schedule

SCHEDULE USED:

TOWN OF SOUTHAMPTON SWMP

TABLE 11-2R

PROPOSED SOLID WASTE MANAGEMENT PROGRAM
GOALS SCHEDULE

Activities through 1991 (update to Original SWAMP)	Total Reduction/Recycling Rate
- Continued voluntary recycling programs for the following materials: newsprint, cardboard, clear, green and brown glass, cans and scrap metal and oil, tires, mixed plastics, leaf & yard wastes, office paper, batteries, manure and other organics.	
- Continued existing leaf and yard waste storage at all transfer stations and at the landfill.	
- Continued stockpiling and marketing of white goods and tires at the landfill.	
- Interfaced with other Eastern Long Island towns to promote a regionalized approach to recycling.	
- Initiated a public promotion campaign including the distribution of bumper stickers throughout the Town.	
- Funded a separate study to analyze the municipal waste stream.	
- Estimated initial equipment needs and budget.	
- Initiated consultant services to draft a Solid Waste Action Plan (SWAMP) study to explore solid waste management alternatives applicable to the Town.	
- Pursued funding through the following channels:	
- The Town of Southampton Conservation Board submitted an application to the NYSDEC for a Community Assistance Competitive Grant (August 1988).	

- Applied to the NYSDEC for a permanent S.T.O.P. facility (September 1988).

- Submitted a NYSDEC LRRRP grant application to request funding for a regional recycling manager and for promotion/education activities (October 1988).

- Implemented phased 1989 Recycling Plan for significant expansion and improvements to the existing program, including mandatory source separation for newspapers, scrap metal and yard waste and cans, glass, corrugated cardboard and office paper.

- Expanded public education program to increase participation with:

  - Newsletters on the new recycling measures and solid waste management planning distributed to all residents and businesses.

  - Instructional "how to" participate flyers and mailers distributed to residents for each new program phase as it is implemented.

  - Press releases and other periodic media contacts publicizing the Town's recycling activities.

- Private haulers began curbside collection.

- Construction of bi-level drop-off center at the landfill for easy unloading by private haulers and self-haulers.

- Promote private efforts to recycle cardboard and office paper prior to enactment of mandatory recycling of these materials.

Activities through 1991	Total Reduction/Recycling Rate
- E2RA hired Recycling Manager and commences promotional activities.	
- Negotiated with other towns to initiate regional approaches for materials processing and marketing.	
- Evaluate plastics test program already underway and identified and implemented ways to increase plastics diversion through better promotion and mandatory source separation and developed plastics markets.	
- Procured agreement for processing commingled cans and glass at an existing facility.	
- Expand public education programs with general recycling promotion by E2RA and supplementary local public education by the Town regarding collection schedules and new initiatives.	
- Improved materials marketing through expanded contacts with brokers in the region.	
- Continued to evaluate economic feasibility of adding other materials to the Town's program.	
- Landfill tip fee raised from $20/ton in 1988 to $40/ton to encourage recycling.	
- Include recyclable plastics in commingled materials collection stream.	
- Continued and expanded public education programs to promote new initiatives, including Recycling Program on local cable TV, fliers on enhancing recycling promoting home composting.	
- Developed and opened permanent household hazardous waste program (STOP).	26% achieved

Activities through 1992	Total Reduction/Recycling Rate
- Continued all programs initiated in previous years.	
- Continued efforts with commercial and self-haulers to promote recycling activities to divert materials away from the landfill.	
- Instituted office paper recycling at government and private offices.	
- Expanded educational efforts to encourage home composting and purchasing of environmentally sensitive consumer products.	
- Increased enforcement of mandatory source separation.	
- Landfill tip fee increased from $40/ton to $50/ton.	
- Submitted Cell 3 renewal petition to NYSDEC.	
- Re-evaluated methods to reliably reduce land-filling of waste.	
- Submitted amended Solid Waste Action Management Plan to NYSDEC with recommendation to expand mandatory source separation and implement composting of organic waste streams.	
- Approval of SWAMP and Petition by DEC.	37%

Activities through 1993	Total Reduction/Recycling Rate
- Increase landfill tip fee from $50/ton to $60/ton.	
- Issue draft procurement documents for recommended recycling and composting facility (assuming procurement under G.M.L. 120-w).	
- Receive comments on draft RFP by potential vendors.	
- Issue final procurement documents for integrated facility.	
- Award contract for facility.	

Activities through 1993	Total Reduction/Recycling Rate
- Submit all permit applications for construction and operation of facility.	
- Continue all educational programs initiated in previous years, and develop seminars for high school students on environmentally-sensitive buying habits, over-packaging, etc. Conduct educational seminars for local businesses.	
- Evaluate effectiveness of mandatory source separation efforts and increase enforcement efforts as deemed appropriate.	
- Continue aggressive marketing of all recyclable materials.	48%

Activites through 1994	Total Reduction/Recycling Rate
- Receive Permit to Construct Facility.	
- Commence construction activities.	
- Prepare EIS and permit applications for Cell 4.	
- Receive Permit to Construct Cell 4.	
- Initiate construction of Cell 4.	
- Continue evaluation of recycling goals and objectives; expand program if goals are not achieved.	
- Continue educational efforts.	
- Evaluate potential markets for compost.	56%

Activities through 1995	Total Reduction/Recycling Rate
- Construction of facility completed.	
- Add source-separated organics to list of mandatory recyclables.	
- Acceptance testing of facility.	
- Full operation of integrated facility.	

Activities through 1995	Total Reduction/Recycling Rate
- Complete Cell 4 construction activities.	
- Continual evaluation of recycling program.	
- Continue educational efforts.	
- Secure markets for compost derived from source separated materials.	
- Test compost derived from MSW; continually evaluate process.	77%
Long Term Activities (1996 - 2000)	
- Optimize Town procurement policies with respect to recyclable products.	
- Evaluate solid waste management goals and objectives.	
- Continue educational efforts.	82%
- Evaluate feasibility of removal of additional recyclables from MSW, and implement necessary measures.	
Total Reduction/Recycling Rate Goal for Year 2010	**85%**

rf/223RAT

REFERENCES

Beckman, Art, Katy-Seghers, Inc., Personal Contact, June 14, 1989.

Browning Ferris Industries, Inc., Notes on Polychloro Dibenzo Dioxins Polychloro Dibenzo Furans in Connection with Waste to Energy Plants, April 1983, p. 7.

Center for the Biology of Natural Systems, Queens College. Intensive Recycling Feasibility Study for the City of Buffalo, Final Report, New York, April 13, 1988.

Crandell, H.C., Jr., Geology and Ground Water Resources of the Town of Southhold, Suffolk County, New York: U.S. Geological Survey Water-Supply Paper 1619-GG. 1963, p. 36.

Duckett, Plant Emissions, Dioxins in Perspective: Knowns, Unknowns, Resolving the Issues, Solid Wastes Management/RRJ, May, 1981, p. 56.

ENSR Consulting and Engineering, A Guide to Permitting and Compliance Under the Clean Air Act and Air Toxics Programs, 10th Edition, June 1988.

Fiber Market News, Vol. 52, December 16, 1988.

Fiber Market News, "Weekly U.S. Paper Stock Prices", 1988-1989.

Franklin Associates, LTD; Characterization of Municipal Solid Waste in the United States, 1960 to 2000; Final Report. July 11, 1986.

Fuller, M.L., The Geology on Long Island, NY: U. S. Geological Survey Professional Paper 82, 1914, p. 231.

George's Sanitation, Personal Contact, May 18 and June 19, 1989.

Gilbride, Brian, Personal Contacts, December 1988 through May 1989.

Holzmacher, McLendon and Murrell, H2M, North Sea Landfill - Prefeasibility Study, February 1988.

Holzmacher, McLendon and Murrell, H2M, Resource Recovery Facility Siting Study for the Towns of Southampton and Riverhead, March 1987.

Holzmacher, McLendon and Murrell, H2M, Town of Southampton Solid Waste Characterization Program, April 1988.

Jensen, H.M., and J. Soren, Hydrogeology of Suffolk County, Long Island, New York: U. S. Geological Survey Hydrologic Investigation Atlas HA-501 1974.

LIRPB, Personal Communication with A. Kunz, and J. Guerriero, Malcolm Pirnie, Inc. March 1989b.

LIRPB, Population-1980 Housing Characteristics, December 1982.

Long Island Lighting Company (LILCO). 1988 Population Survey. Current Population Estimates for Nassau and Suffolk Counties. June, 1988.

Long Island Lighting Company, Population Estimates, January 1988.

Long Island Railroad. Personal Communications with the Public Relations Department and D. Corelli of Malcolm Pirnie, Inc. March, 1989.

Long Island Regional Planning Board (LIRPB), Data provided to Malcolm Pirnie, March 1989a.

Louis K. McLean Associates, Draft EIS North Sea Sanitary Landfill, June 1988.

Louis K. McLean Associates, Study and Report - North Sea Sanitary Landfill, June 1988.

Malcolm Pirnie Inc., "Town of Southampton, New York, Carters' Questionnaire, Tabulation of Responses". March 1989.

Nassau-Suffolk Region STOP Program, 1989.

Nemickas, B. and E. J. Kozalka, Geohydrologic appraisal of water resources of the South Fork, Long Island, New York: U. S. Geological Survey Water-Supply Paper 2073, 1982, p. 55.

New York Returnable Beverage Container Law, The: The First Year, Rockefeller Institute, 1985.

New York State Department of Environmental Conservation (NYSDEC), tentative freshwater wetlands maps, June, 1989a.

New York State Department of Transportation (DOT), maps for Eastport, 1981; Mattituck, 1981; Sag Harbor, 1981; Southampton, 1981; Quogue, 1981.

New York State Environmental Conservation Law, Sec. 23-2307 (1978, amended 1983).

New York State Environmental Conservation Law, Sec. 23-2308 (1983, effective 1984).

New York State, General Municipal Law, Sec. 120-aa, 1988.

NYSDEC, Division of Air Pollution Control. Personal communication with A. Cano, Air Pollution Control Engineer and L. Wordsman of Malcolm Pirnie, Inc. June, 1989b.

NYSDEC, Division of Wildlife Resources, Personal Communication with L. Wordsman of Malcolm Pirnie, Inc. March, 1989c.

NYSDEC Grant Application and Supporting Documentation, "Recycling Among Five Eastern Long Island Towns," October 1988.

NYSDEC, Information Resource Section, Significant Habitat Unit, Personal Communication with Mike Schiebel, Senior Wildlife Biologist, and L. Wordsman of Malcolm Pirnie, Inc. April. 1989d.

NYSDEC, New York State Air Quality Report. Ambient Air Monitoring System. Annual, 1987.

NYSDEC, New York State Solid Waste Management Plan, 1989.

Omni Technical, Inc., Personal Communications. April 1989.

Optimization of Office Paper Recovery Systems, United States Environmental Protection Agency, 1988.

Progress of Recycling in Champaign-Urbana During 1984, The, Community Recycling Center, January 31, 1985.

Real Property Tax Service Agency, Town of Southampton Tax Maps. September, 1988.

Recycling Times, Newsprint Manufacturers Study, Recycled Fiber Use. May 23, 1989.

Resource Recovery Yearbook, 1988-1989.

Spielmann, Brian A., "A Yard Waste Primer", Waste Age Magazine, February 1988.

Spinoza, R., K. Spinoza, and J. Spinoza, Long Island, A Guide to New York's Nassau and Suffolk County. 1988.

Suffolk County, Personal Communication, D. Newtown. June 5, 1989.

Suffolk County Planning Department, Data Book - 1982. A Place to Work. June, 1982.

Suffolk County Planning Department, Data Book - 1983. A Place to Live. 1983.

Suffolk County Planning Department, Data Book - 1984. A Place to Enjoy. December, 1984.

Suffolk County Department of Health Services. Suffolk County Sanitary Code Article 6 and 7. January, 1987.

Suter, Russel, DeLaguna, Wallace, and Perimutter, N.M., Mapping of geologic formations and aquifers of Long Island, New York: New York State Water Power and Control Commission Bulletin GB-18, 1949, p. 181.

Tchobanoglous, G., H. Theisen, R. Eliassen; Solid Wastes: Engineering Principals and Management Issues; McGraw-Hill, 1977.

Town of Brookhaven, Personal Communication with James Heil, Department of Waste Management Commissioner, May-June 1989.

Town of Southampton, Data Processing Center, Printout of Town properties, April, 1989.

Town of Southampton, Local Law No. 16 of 1988 (Amending Chapter 37 of the Town Code).

Town of Southampton. Master Plan, 1970.

Town of Southampton. Master Plan Update Report #2. A Report to the Town board. David Emilita, Town Planner. October, 1983.

Town of Southampton, Master Plan Update Report #2, October 1983.

Town of Southampton North Sea Landfill Scalehouse Records, 1987 and 1988.

Town of Southampton, Personal Communication with A. Jackson, Director of Parks and Recreation. April 20, 1989.

Town of Southampton, Personal Communication with D. Emilita, Town Planning Consultant, and J. Guerriero, Malcolm Pirnie, Inc., March 1989.

Town of Southampton, Personal Communication with Sanitation Department Personnel. January/August 1989.

Town of Southampton, Personal Communication with T. Larelle, Highway Department. May 19, 1989.

Town of Southampton. Personal Communication with Town Fire Marshall K. Jones and D. Correlli. March, 1989.

Town of Southampton, Planning Department. Data provided to Malcolm Pirnie, Inc., March-June, 1989.

Town of Southampton, Southampton Waste Collection Facility North Sea Landfill Operations Manual and Contingency Plan, June 1989.

Town of Southampton, Zoning Maps. Sixth update, December 1988.

U. S. Department of Agriculture Soil Conservation Service in cooperation with Cornell Agricultural Experiment Station, Soil Survey of Suffolk County, New York: U. S. Department of Agriculture, 1975.

Waste Disposal Problem in New York City, The: A Proposal For Action, Volume 7: Recycling Strategies. New York City Department of Sanitation, Undated.

Watson, Tom, "Major Curbside Program Launched in Seattle"; Resource Recycling, March/April 1988.

Additional References

General:

E&A Environmental/EMCON, Inc., Town of East Hampton, New York, Final Solid Waste Management Plan and Generic Environmental Impact Statement, April 1992 Update.

Gould, Mark, Richard Garrison and Stephen Foster, "Source Separation and Composting of Organic Municipal Solid Waste", Resource Recycling, Vol XI, No. 7, July 1992.

Town of Southampton, "How to Compost at Home", prepared by Mullen & McCaffrey Direct Response, May 1992.

Town of Southampton, "How to Participate in Southampton Town's Mandatory Recycling Program", prepared by Mullen & McCaffrey Direct Response, May 1992.

MSW Composting:

A. Magnuson, Composting: Dirty Word or Waste Solution? American City & County, May 1992 pp. 28-45.

S. Hammer, Garbage in/Garbage Out: A Hard Look at Mixed Municipal Solid Waste Composting, New York Environmental Institute, October 1991.

C. Golueke and L. Diaz, Source Separation and MSW Compost Quality, BioCycle, May 1991, p. 70.

Municipal Solid Waste Composting Report, New Jersey Advisory Council on Solid Waste Management, May 1992.

Legislative Committee, Solid Waste Management Composting Report, Draft January 1992.

APPENDIX A

ORDER ON CONSENT FILE NO. 1-2194

STATE OF NEW YORK
DEPARTMENT OF ENVIRONMENTAL CONSERVATION

In the Matter of the Alleged Violation of Articles 27 & 71 of the New York State Environmental Conservation Law & Part 360	
TOWN OF SOUTHAMPTON and LOUIS K. McLEAN ASSOCIATES, INC.	ORDER ON CONSENT FILE NO. 1-2194
(Suffolk County) Respondents	

WHEREAS, Article 27, Title 7, of the New York State Environmental Conservation Law gives the New York State Department of Environmental Conservation ("Department"), the power to adopt and promulgate, amend and repeal rules and regulations governing the operation of solid waste management facilities, and such rules and regulations shall be directed at the prevention and reduction of a. pollution, obnoxious odors and the infestation of flies and vermin and other conditions inimical to the public health, safety and welfare; and

WHEREAS, Part 360 of Title 6 of the Official Compilation of codes, Rules & Regulations of the State of New York ("6NYCRR"), sets forth the provisions for the operation of a solid waste management facility; and

WHEREAS, the Department has introduced evidence substantiating violations of Article 27 of the Environmental Conservation Law and 6NYCRR 360 in that Respondent, Town of Southampton, caused and/or permitted to be caused, the construction and operation of Cell #2 of the North Sea Landfill in noncompliance with 6NYCRR Parts 360.2 and 360.8, and Permit #10-83-1374; and

WHEREAS, the Department has introduced evidence substantiating that Respondent, Louis K. McLean Associates, Inc., violated the certification and supervision requirements of 6NYCRR Part 360.4(e); and

WHEREAS, the Department has introduced evidence substantiating that Respondent, Town of Southampton, has caused and/or permitted to be caused, the violation of 6NYCRR Part 360.8, by the failure to maintain the required fifty (50') foot buffer; and

WHEREAS, the Department has introduced evidence substantiating that Respondent, Town of Southampton, has caused and/or permitted to be caused, the violation of 6NYCRR Part 360 by the operation of the North Sea Landfill without benefit of permit since December 31, 1986; and

NTCD

ORDERED, that funds shall be disbursed from the environment fund created above only upon the written authorization of the General Counsel and that within five (5) days of receipt of writ authorization from the General Counsel, the Respondent will forw to the General Counsel for his signature, a completed voucher fo: disbursement of the approved funds. Within thirty (30) days of receipt of the voucher signed by the General Counsel, the Respondents shall forward the approved funds to the General Counsel c/c the Regional Attorney, Region One, New York State Department of Environmental Conservation, Building 40, S.U.N.Y., Stony Brook, N York, and it is further

AND GENERAL COUNSEL SHALL DISBURSE THESE FUNDS TO THE PAYEE WITHIN

MCD

ORDERED, that the General Counsel shall forward copies of al authorizations to the following:

Mr. John Bennett, Town Attorney
Town of Southampton
116 Hampton Road
Southampton, N.Y. 11968; and it is further

FROM THE ENVIRONMENTAL FUND

MCD

ORDERED, that no monies shall be expended for any activities required under this Order; or otherwise required by law; and it is further

ORDERED, that all environmental review and permit requirement applicable to any activities for which environmental fund monies are expended, must be complied with; and it is further

ORDERED, that any activities for which environmental fund monies are expended must primarily benefit the environment and the public, rather than the Department or the Respondents; and it is further

ORDERED, that the terms of this Order shall not be construed to prohibit the Commissioner or his duly-authorized representative from exercising any summary abatement powers, either at common law or as granted pursuant to statute or regulation; and it is further

ORDERED, that Respondents shall not suffer any penalty under any of the provisions, terms and conditions hereof, or be subject to any proceedings or actions for any remedy or relief, if they cannot comply with any requirements of the provisions hereof because of an Act of God, war, riot or other catastrophe as to which negligence or willful misconduct on the part of Respondents was not a proximate cause, provided however, that Respondents shall immediately notify the Department in writing when they obtain knowledge of any such condition and request an appropriate extension or modification of the provisions hereof; and it is further

MCD

ORDERED, that in those instances in which the Respondents desire that any of the provisions, terms or conditions of this Order be changed, it shall make written application, setting fo: the grounds for the relief sought, to the Commissioner, c/o Lor: Riley, Regional Attorney, New York State Department of Environmental Conservation, Building 40, S.U.N.Y. Camp's, Stony Brook, York 11794; and it is further

ORDERED, that nothing contained herein s ..l be construed a preventing the Department from collecting re..iatory fees where applicable; and it is further

ORDERED, that nothing contained herein shall be construed a: preventing the Department or any other agency from requiring additional investigation and/or remediation of the site, includi: any investigation or remediation required pursuant to ECL §27-13: CERCLA, SARA, et al; and it is further

ORDERED, that any change in this Order shall not be made or become effective except as specifically set forth by written orde of the Commissioner, after notice to the Respondents, such writte order being made either upon written application of the Responden or upon the Commissioner's own findings; and it is further

ORDERED, that any such written order by the Commissioner changing this Consent Order shall be a final administrative determination subject to review pursuant to Article 78 of the CPLR.

Dated: Stony Brook, New York
1988

THOMAS C. JORLING
Commissioner of Environmental Conservatic

By_____
HAROLD D. BERGER
Regional Director

To: Town of Southampton
c/o Beveridge & Diamond
101 Park Avenue
Suite 1202
New York, New York 10178

Louis K. McLean Associates, Inc.
c/o Bracken & Margolin
One Suffolk Square - Suite 300
Islandia, New York 11722

SCHEDULE A

Compliance Schedule
for
Respondent,

TOWN OF SOUTHAMPTON

Immediately,	Respondent shall submit monthly repor to and meet on a monthly or bi-monthl basis with the Department to discuss the progress of all matters which are the subject of this Order and Schedul A and B.
Immediately,	The final elevation (before settlement of Cell #2 shall not exceed a height c 175 feet above Mean Sea Level.
Immediately,	Respondent shall not re-enter (for the purpose of landfilling) the capped portion of the landfill known as Cell #1.
Within fifteen (15) days of the date of execution of this Order,	Respondent shall submit a report detailing the volumetric/useful life for Cell #2 of the North Sea Landfill.

I. RECYCLING/COMPACTION

Immediately,	Respondent shall take any and all necessary steps to maximize recycling and compaction of solid waste.
	Respondent shall place solid waste in Cell #2 in lifts not to exceed two (2') feet in order to facilitate compaction.
Within sixty (60) days of the date of execution of this Order,	Respondent shall have submitted an approvable[1] plan for the implementation of mandatory recycling within the Town of Southampton, said plan to include a schedule of dates leading to implementation by December 31, 1989. Said plan shall be for the recycling of newspaper, cardboard, glass, yard waste, grass, metal, miscellaneous paper products, and brush.

[1] Approvable in the context of this Order, shall mean capable of approval by NYSDEC with minimal revision. Minimal revision shall mean that the Respondent can incorporate revisions required by NYSDEC and resubmit the document for approval within fifteen (15) business days of receipt of the NYSDEC's comments.

Within six (6) months of the date of execution of this Order,	Respondent shall submit to the Department, a statement pledging its full faith and credit for the amount specified in the Final Closure Plan, covering the cost of proper closure of Cell #2. If necessary, the Department shall be entitled to enforce such pledge by any means available to it, including the withholding of State aid and collection of taxes.

III. METHANE GAS COLLECTION/RECOVERY SYSTEM

Within ninety (90) days of the date of execution of this Order,	Respondent shall submit an approvable plan for methane gas collection and/or recovery system for Cells #1 and #2 to the Department for its approval, said plan to include an implementation schedule.
Within one hundred twenty (120) days of the date of Department's approval of the plan for methane gas collection and/or recovery system,	Respondent shall commence installation of the methane gas collection and/or recovery system for Cells #1 and #2, and shall complete installation in accordance with the approved implementation schedule. Upon installation, said methane gas collection and/or recovery system shall be maintained and operated in accordance with the Department-approved plan.

IV. OFF-ISLAND TRUCKING

Within forty-five (45) days of the date of execution of this Order,	Respondent shall submit to the Department, a complete[2] conceptual design, including site selection and construction and implementation schedule, for a proposed temporary transfer station in the event that off-Island trucking should become necessary.

[2]Complete in the context of this Order, shall mean containing all necessary information as required by the Department.

Within one hundred and twenty (120) days of the date of notification by the Department of its determination,	Respondent will have completed the r· pair or replacement of leachate coll· tion well, as required by the Department.

VI. INVESTIGATION AND REMEDIATION OF CELL #2

Within one hundred twenty (120) days of the date of execution of this Order,	Respondent shall submit to the Depart ment a complete report including all data gathered and interpretations mad by Geraghty & Miller, pursuant to the investigation and monitoring of Cell #2, North Sea Landfill.
Following final acceptance and approval by the United States Environmental Protection Agency (EPA) of the North Sea Landfill RIFS (Remedial Investigation and Feasibility Study) for Cell #1 and submittal of an approved post-closure monitoring plan to the Department for Cell #2 by Respondent,	Department will review all data pertinent to the groundwater investigation of Cell #2 and assess the need for additional monitoring requirements as to contamination if any, from Cell #2, that would involve an area not covered by RIFS.
Within one hundred and eighty (180) days of notification by the Department of additional data requirements, if any, for completion of the Cell #2 groundwater investigation,	Respondent will have completed the installation of all additional wells, if required, and incorporated these in the existing complement of Cell 2 monitoring wells, and shall submit a complete report indicating the limits of extant groundwater contamination associated with Cell 2.
Within sixty (60) days of notification of the Department's approval of completeness of the Cell #2 investigation,	Respondent shall submit to the Department, an approvable plan for the remedial alternatives, if any for Cell #2, consistent with the EPA-accepted RIFS for Cell #1. Said plan shall include an implementation schedule.
Following Department review of the plan for remedial alternatives for Cell #2,	Department will notify Respondent concerning what remedial action, if any, is required for Cell #2, consistent with the EPA-approved RIFS for for Cell #1.

IX. CLEANUP OF SLUDGE LAGOONS

Within one hundred twenty (120) days of the date of execution of this Order,	Respondent shall have submitted to the Department for its approval, an approvable workplan for the cleanup of the sludge lagoons at the North Sea Landfill site. Said plan shall include a survey delineating the boundaries of the lagoons, a review of existing relevant data, soil boring results, if any, and an implementation schedule.
Upon approval by the Department,	The cleanup of the sludge lagoons shall be completed in accordance with the implementation schedule in the Department-approved plan.

WMD

3. Erosion Control

   a. Maintenance program.
   b. Activities required to repair erosion.
   c. Replacement cover.
   d. Vegetative cover replacement if lost during drought condition.

4. Maintenance of groundwater monitoring and leachate collection systems in or contiguous to Cell 2.

5. Monitoring of the leak detection system in the leachate holdin pond and landfill proper. See "2.A" above for sub-elements.

6. Maintenance of surface water collection system.

7. Planned responses to possible occurrences of:

   a. Loss of containment integrity, including surface water collection system and leachate holding pond failure.
   b. Severe storm erosion.
   c. Drainage failure, including leachate generation and breakouts.
   d. Groundwater intrusion, including excess leachate generation.
   e. Contamination of the surface waters.
   f. Restrictions on disposal of excess leachate produced (e.g., extra hauling required).
   g. Outline of remedial action plan to address water contamination and cleanup.

Activities Required During Post-Closure Period

1. Collecting, removing and disposing of leachate from all sources.

   a. Leachate collection system (i.e., pumping and collecting procedures).

      1. Monitoring system.
      2. Measured volume and characteristics of leachate collected monthly.
      3. Pretreatment history and activities, if required.
      4. Maintenance schedule for leachate collection/ storage system including lagoons.

APPENDIX B

SOUTHAMPTON SOLID WASTE COMPOSITION ANALYSIS

A solid waste composition analysis was conducted for the Town of Southampton using existing landfill records and waste composition data. This data was complemented with national data to provide further detailed analysis, especially pertaining to subcategories.

Table B-1 presents the existing waste composition based on landfill records, combined with data from a previous waste composition study in Southampton. The landfill data column represents predominant loads of specific materials delivered to the North Sea Landfill. These categories include yard waste (i.e., leaves, landscaping debris), food waste (i.e., potato waste), wood (i.e., wood chips), soil (i.e., dirt, sand), and mixed refuse (i.e., garbage, miscellaneous). These figures are based on an average of records from 1987 and 1988. In addition, quantities of materials recycled (cardboard, white goods, glass) were added. The waste sort data are based on a sampling of the mixed refuse fraction, which comprises 86.8 percent of the total waste stream. Using these data and landfill records, an overall combines waste composition was developed in column (3) of Table B-1.

To provide further analysis, information from waste composition studies in Long Island and other locations was also evaluated for Southampton. Table B-2 provides data on waste composition from a pilot recycling/composting program conducted in East Hampton, New York. These data reflect the waste composition from 100 households that voluntarily participated in a pilot source separation program for a period of 10 weeks. The figures were adjusted to reflect yard waste and bulky items in the solid waste stream. These components of the waste stream were exclusive to the study. Interestingly, the East Hampton data presents a 51 percent higher paper composition than that shown for Southampton (see Table B-1). In addition, glass was 26 percent lower.

Table B-3 shows detailed waste composition data from five different studies in the United States. Based on these figures, averages of the various components of the waste stream are presented in Table B-4. In addition, range values (maximum value and minimum value) are also shown.

TABLE B-1

EXISTING WASTE COMPOSITION DATA
TOWN OF SOUTHAMPTON

Component	Landfill[1] Data	Waste[2] Sort	Combined[3]
Paper	1.2%	38.2%	34.3%
OCC/Kraft	0.5%	11.6%	10.5%
Newsprint	0.7%		
High Grade			
Magazines			
Mixed Paper/Other Paper			
Plastic		8.6%	7.5%
Film			
HDPE			
PET			
Polystyrene			
Other Plastic			
Yard Waste	7.7%	11.8%	17.9%
Wood	1.1%	4.0%	4.6%
Food	0.3%	10.9%	9.8%
Textiles		3.2%	2.8%
Other Organics			
Total Organics:	10.3%	76.7%	76.9%
Metals		9.1%	7.9%
Steel Cans			
Bimetal Cans			
Aluminum Cans			
Other Aluminum			
Other Metals			
Glass	0.1%	14.0%	12.2%
Clear Containers			
Brown Containers			
Green Containers			
Other Glass			
Soil	1.6%		1.6%
Other Inorganics			
Total Inorganics:	1.7%	23.1%	21.7%
Special Wastes	1.3%		1.3%
Oversize Bulky	1.1%		1.1%
Tires	0.2%		0.2%
Mixed Refuse:	86.8%		
Total:	100.0%	99.8%	99.8%

Notes:

(1) As received at the landfill. Average of 1987 and 1988. Quantities of newspaper and glass are based on partial data from 1988.

(2) Based on solid waste sampling and characterization study conducted by H2M, 4/86, for the Town of Southampton. This includes only the mixed refuse fraction (83.24%).

(3) Based on a combination of landfill records and waste characterization study.

Example: paper = .868 x 38.2 + 1.2 = 34.3%

TABLE B-2

WASTE COMPOSITION FOR THE TOWN OF EAST HAMPTON
RESIDENTIAL SECTOR[1]

Component	Pilot Program	Pilot Program with Yard Waste & Construction Debris[2]
Paper	64.6%	51.7%
OCC/Kraft	3.0%	2.4%
Newsprint	19.1%	15.3%
High Grade Magazines		
Mixed Paper	19.1%	15.3%
Other Paper	23.4%	18.7%
Plastic	3.5%	2.8%
Film		
HDPE		
PET		
Polystyrene		
Other Plastic		
Yard Waste		18.7%
Wood		
Food	11.5%	9.2%
Textiles	0.9%	0.8%
Other Organics	5.4%	4.3%
Total Organics:	86.0%	87.5%
Metals	2.9%	2.3%
Steel Cans	2.2%	1.7%
Bimetal Cans		
Aluminum Cans		
Other Aluminum	0.2%	0.2%
Other Metals	0.5%	0.4%
Glass	11.2%	9.0%
Clear Containers		4.9%
Brown Containers		1.0%
Green Containers		3.1%
Other Glass		
Soil	0.0%	
Other Inorganics	0.3%	0.3%
Total Inorganics:	14.4%	11.5%
Special Wastes	0.0%	1.3%
Oversize Bulky		1.3%
Tires		
Total:	100.4%	100.3%

Notes:

(1) Source: Reference 1.

(2) Assumes a 20% total of yard waste and oversize bulky.

TABLE B-3

COMPOSITION OF DISCARDED MUNICIPAL SOLID WASTE
BASED ON WASTE COMPOSITION FIELD STUDIES

Component	Los Angeles Co California[1]	Ann Arbor, Michigan[2]	San Francisco California[3]	Broward Co Florida[4]	Ramsey/ Washington Co Minnesota[5]
Paper	31.0%	38.0%	46.7%	40.7%	46.5%
OCC/Kraft	12.3%	7.5%	14.3%	15.3%	17.4%
Newsprint	5.4%	5.9%	10.4%	12.1%	6.5%
High Grade Magazines		4.3%			5.3%
Mixed Paper	13.3%				
Other Paper		20.3%	22.0%	13.3%	17.3%
Plastic	9.1%	5.8%	8.6%	8.6%	10.0%
Film	4.4%			3.2%	
HDPE	3.8%			1.1%	
PET	0.2%			0.2%	
Polystyrene					
Other Plastic	0.7%			5.5%	
Yard Waste	26.9%	10.8%	3.5%	14.5%	11.8%
Wood	5.4%	5.4%	5.7%	6.8%	6.2%
Food	5.5%	4.1%	10.2%	7.2%	6.8%
Textiles	4.2%				
Other Organics	3.0	13.7%	5.3%	6.7%	6.8%
Total Organics:	85.1%	77.7%	80.0%	84.5%	88.1%
Metals	6.5%	6.2%	6.2%	6.6%	4.6%
Steel Cans					
Bimetal Cans					
Aluminum Cans	0.6%	0.7%	0.9%	1.1%	0.6%
Other Aluminum					
Other Metals	5.9%	5.4%	5.3%	5.5%	3.2%
Glass	3.8%	3.1%	7.8%	5.6%	3.6%
Clear Containers					
Brown Containers					
Green Containers					
Other Glass					
Soil					
Other Inorganics	4.8%	13.1%	6.0%	3.3%	2.6%
Total Inorganics:	15.1%	22.3%	20.0%	15.5%	10.8%
Special Wastes					
Total:	100.2%	100.0%	100.0%	100.0%	98.9%

Notes:

(1) Source: Reference 2.
(2) Source: Reference 3.
(3) Source: Reference 4.
(4) Source: Reference 5.
(5) Source: Reference 6.

TABLE B-4

RANGE VALUE OF VARIOUS COMPONENTS OF THE WASTE STREAM[1]

Component	Average	Maximum Value	Minimum Value
Paper	40.6%	46.7%	31.0%
OCC/Kraft	13.4%	17.4%	7.5%
Newsprint	8.1%	12.1%	5.4%
High Grade	4.8%	5.3%	4.3%
Magazines			
Mixed Paper			
Other Paper	18.2%	22.0%	13.3%
Plastic	8.4%	10.0%	5.8%
Film	3.8%	4.4%	3.2%
HDPE	2.5%	3.8%	1.1%
PET	0.2%	0.2%	0.2%
Polystyrene			
Other Plastic	3.1%	5.5%	0.7%
Yard Waste	13.5%	26.9%	3.5%
Wood	5.9%	6.8%	5.4%
Food	6.8%	10.2%	4.1%
Textiles			
Other Organics	7.1%	13.7%	3.0%
Total Organics:	83.1%	88.1%	77.7%
Metals	6.0%	6.6%	4.6%
Steel Cans			
Bimetal Cans	0.5%	0.5%	0.5%
Aluminum Cans	0.8%	1.1%	0.6%
Other Aluminum	0.3%	0.3%	0.3%
Other Metals	5.1%	5.9%	3.2%
Glass	4.8%	7.8%	3.1%
Clear Containers			
Brown Containers			
Green Containers			
Other Glass			
Soil			
Other Inorganics	6.0%	13.1%	2.6%
Total Inorganics:	16.7%	22.3%	10.8%
Special Wastes			
Oversize Bulky	-	-	-
Tires	-	-	-
Total:	-	-	-

Notes:

(1) Based on waste composition studies presented in Table B-3.

TABLE B-5

VALUES FOR SOUTHAMPTON WASTE

Component	Default Value
Paper(1)	1.00

Corrugated	0.37
Newsprint	0.14
High Grade	0.12
Magazines	0.07
Mixed Paper	0.10
Other Paper	0.20
Plastic(1)	1.00

Film	0.32
HDPE	0.11
PET	0.02
Polystyrene	0.02
Other Plastic	0.53
Metals(1)	1.00

Steel Cans	0.49
Bimetal Cans	0.10
Aluminum Cans	0.14
Other Aluminum	0.06
Other Metals	0.20
Glass(1)	1.00

Food & Beverage	0.81
Other	0.19
Food & Beverage Glass(2)	1.00

Clear	0.54
Brown	0.11
Green	0.35

Notes:

(1) Source: Reference 6.
(2) Source: Reference 1.

TABLE B-6

WASTE COMPOSITION
TOWN OF SOUTHAMPTON

Component	Estimate[1]	Estimate with Subcategories[2]
Paper	34.3%	34.3%
OCC/Kraft		12.7%
Newsprint		4.8%
High Grade		4.1%
Magazines		2.4%
Mixed Paper		3.4%
Other Paper		6.9%
Plastic	7.5%	7.5%
Film		2.4%
HDPE		0.8%
PET		0.1%
Polystyrene		0.1%
Other Plastic		4.0%
Yard Waste	17.9%	17.9%
Wood	4.6%	4.6%
Food	9.8%	9.8%
Textiles	2.8%	2.8%
Other Organics		
Total Organics:	76.9%	76.9%
Metals	7.9%	7.9%
Steel Cans		3.9%
Bimetal Cans		0.8%
Aluminum Cans		1.1%
Other Aluminum		0.5%
Other Metals		1.6%
Glass	12.2%	12.2%
Clear Containers		5.4%
Brown Containers		1.1%
Green Containers		3.4%
Other Glass		2.3%
Soil	1.6%	1.6%
Other Inorganics		
Total Inorganics:	21.7%	21.7%
Special Wastes	1.3%	1.3%
Oversize Bulky	1.1%	1.1%
Tires	0.2%	0.2%
Total:	99.8%	99.8%

Notes:

(1) See Table B-1.

(2) Based on default values shown in Table B-5.

TABLE B-7

ADJUSTED ESTIMATED WASTE COMPOSITION
TOWN OF SOUTHAMPTON

Component	Adjusted[1]	Adjusted Average TPD
Paper	42.2%	79.3
OCC/Kraft	15.6%	29.3
Newsprint	5.9%	11.1
High Grade	5.1%	9.6
Magazines	3.0%	5.6
Mixed Paper	4.2%	7.9
Other Paper	8.4%	15.8
Plastic	6.2%	11.7
Film	2.0%	3.8
HDPE	0.7%	1.3
PET	0.1%	0.2
Polystyrene	0.1%	0.2
Other Plastic	3.3%	6.2
Yard Waste	14.9%	28.0
Wood	3.8%	7.1
Food	8.2%	15.4
Textiles	2.3%	4.3
Other Organics	4.3%	8.1
Total Organics:	81.9%	154.0
Metals	6.6%	12.4
Steel Cans	3.2%	6.0
Bimetal Cans	0.7%	1.3
Aluminum Cans	0.9%	1.7
Other Aluminum	0.4%	0.8
Other Metals	1.3%	2.4
Glass	8.7%	16.4
Clear Containers	3.8%	7.1
Brown Containers	0.8%	1.5
Green Containers	2.4%	4.5
Other Glass	1.6%	3.0
Soil	1.6%	3.0
Other Inorganics	0.3%	0.6
Total Inorganics:	17.1%	32.1
Special Wastes	1.3%	2.4
Oversize Bulky	1.1%	2.1
Tires	0.2%	0.4
Total:	100.0%	188.0

Notes:

(1) From 1987/1988 landfill data and adjusted to reflect CRS experience with similar waste streams.

APPENDIX C

ENDANGERED, THREATENED, AND SPECIAL CONCERN SPECIES OF NEW YORK STATE

ANIMAL SPECIES

I. ENDANGERED

**Chittenango Ovate Amber Snail	Succinea chittenangoensis
*Karner Blue Butterfly	Lycaeides melissa
*Shortnose Sturgeon	Acipenser brevirostrum
Longjaw Cisco	Coregonus alpenae
Round Whitefish	Prosopium cylindraceum
Pugnose Shiner	Notropis anogenus
Eastern Sand Darter	Ammocrypta pellucida
Bluebreast Darter	Etheostoma camurum
*Gilt Darter	Percina evides
Blue Pike	Stizostedion vitreum glaucum
Spoonhead Sculpin	Cottus ricei
Deepwater Sculpin	Myoxocephalus thomosoni
Tiger Salamander	Ambystoma tigrinum
*Bog Turtle	Clemmys muhlenbergi
*Leatherback Sea Turtle	Dermochelys coriacea
*Hawksbill Sea Turtle	Eretmochelys imbricata
Atlantic Ridley Sea Turtle	Lepidochelys kemopii
Massasauga Rattlesnake	Sistrurus catenatus
*Golden Eagle	Aquila chrysaetos
*Bald Eagle	Haliaeetus leucoceohalus
*Peregrine Falcon	Falco peregrinus
Eskimo Curlew	Numenius borealis
Least Tern	Sterna albifrons
Roseate Tern	Sterna dougallii
*Loggerhead Shrike	Lanius ludovicianus
*Indiana Bat	Myotis sodalis
*Sperm Whale	Physeter catadon
*Sei Whale	Balaenoptera borealis
*Blue Whale	Balaenoptera musculus
*Finback Whale	Balaenoptera physalus
*Humpback Whale	Megaptera novaeanglias
*Right Whale	Balaena glacialis
*Gray Wolf	Canis lupus
Cougar	Felis concolor

*Indicates that the species is currently listed as "endangered" by the U.S. Department of the Interior.

**Indicates that the species is currently listed as "threatened" by the U.S. Department of the Interior.

III. SPECIAL CONCERN (cont'd)

Common Nighthawk	*Chordaeiles minor*
Common Raven	*Corvus corax*
Sedge Wren	*Cistothorus platensis*
Eastern Bluebird	*Sialia sialis*
Henslow's Sparrow	*Ammodramus henslowii*
Grasshopper Sparrow	*Ammodramus savannarum*
Vesper Sparrow	*Pooecetes gramineus*
Small-footed Bat	*Myotis leibii*
New England Cottontail	*Sylvilagus transitionalis*
Harbor Porpoise	*Phocoena phocoena*

[1] DEFINITIONS

Endangered Species are any species which meet one of the following criteria:

(1) Any native species in imminent danger of extirpation or extinction in New York.

(2) Any species listed as endangered by the United States Department of the Interior, as enumerated in the Code of Federal Regulations.

Threatened Species are any species which meet one of the following criteria:

(1) Any native species likely to become endangered within the foreseeable future in New York.

(2) Any species listed as threatened by the United States Department of the Interior, as enumerated in the Code of Federal Regulations 50 CFR 17.11.

Special Concern Species are those native species which are not yet recognized as endangered or threatened, but for which documented concern exists for their continued welfare in New York. These species could become endangered or threatened in the future and should be more closely monitored. Unlike the first two categories, species of special concern receive no additional legal protection under Environmental Conservation Law Section 11-0535 (Endangered and Threatened Species). This category is presented primarily to enhance public awareness of this group of species which bear additional attention.

PLANT SPECIES

RARE PLANT STATUS LIST
NT Natural Heritage Program

SCIENTIFIC NAME	COMMON NAME	STATE LEGAL STATUS	FEDERAL STATUS
ACONITUM NOVEBORACENSE	NORTHERN MONK'S-HOOD	T	LT
ADOXA MOSCHATELLINA	MOSCHATEL	T	
AGALINIS ACUTA	SANDPLAIN GERARDIA	E	LE
AGALINIS VIRGATA	PINE-BARREN GERARDIA	R	
AGASTACHE NEPETOIDES	YELLOW GIANT-HYSSOP		
AGRIMONIA PARVIFLORA	AGRIMONY	R	
AGRIMONIA ROSTELLATA	WOODLAND AGRIMONY	R	
AGROSTIS MERTENSII	NORTHERN BENTGRASS	T	
ALLIUM CERNUUM	WILD ONION	R	
ALLIUM SCHOENOPRASUM	WILD CHIVES		
AMARANTHUS PUMILUS	SEABEACH AMARANTH		C2
AMELANCHIER X NANTUCKETENSIS	NANTUCKET JUNEBERRY	E	
AMERORCHIS ROTUNDIFOLIA	ROUND-LEAVED ORCHIS	V	
AMIANTHIUM MUSCAETOXICUM	FLY-POISON		
ANEMONE MULTIFIDA	CUT-LEAF ANEMONE		
ANGELICA LUCIDA	ANGELICA	E	
APLECTRUM HYEMALE	PUTTYROOT	V	
ARABIS DIVARICARPA	PURPLE ROCK-CRESS	R	
ARABIS MISSOURIENSIS	GREEN ROCK-CRESS	R	
ARABIS SHORTII	TOOTHED ROCK-CRESS		
ARETHUSA BULBOSA	SWAMP PINK	R	
ARISTOLOCHIA SERPENTARIA	VIRGINIA SNAKEROOT		
ARMORACIA AQUATICA	LAKE-CRESS	R	
ARNICA LANCEOLATA	ARNICA	E	

RARE PLANT STATUS LIST
NY Natural Heritage Program

SCIENTIFIC NAME	COMMON NAME	STATE LEGAL STATUS	FEDERAL STATUS
BERULA ERECTA	WILD PARSNIP		
BETULA GLANDULOSA	TUNDRA DWARF BIRCH	E	
BETULA MINOR	DWARF WHITE BIRCH	E	
BETULA PUMILA	SWAMP BIRCH	R	
BIDENS BIDENTOIDES	ESTUARY BEGGAR-TICKS	T	
BIDENS HYPERBOREA	ESTUARY BEGGAR-TICKS	T	
BIDENS LAEVIS	SMOOTH BUR-MARIGOLD	R	
BLEPHILIA CILIATA	DOWNY WOOD-MINT	T	
BOTRYCHIUM LUNARIA	MOONWORT	E	
BOTRYCHIUM MINGANENSE	MINGAN MOONWORT	E	
BOTRYCHIUM RUGULOSUM	RUGULOSE GRAPE FERN	E	
BOUTELOUA CURTIPENDULA	SIDE-OATS GRAMA	E	
BUCHNERA AMERICANA	BLUE-HEARTS		
CACALIA SUAVEOLENS	SWEET-SCENTED INDIAN-PLANTAIN	R	
CALAMAGROSTIS LACUSTRIS	POND REEDGRASS		
CALAMAGROSTIS PICKERINGII	PICKERING'S REEDGRASS	R	
CALAMAGROSTIS PORTERI SSP PERPLEXA	WOOD REEDGRASS	E	
CALAMAGROSTIS PORTERI SSP PORTERI	PORTER'S REEDGRASS	R	
CALAMAGROSTIS STRICTA SSP STRICTA	NORTHERN REEDGRASS	E	
CALAMAGROSTIS STRICTA VAR INEXPANSA	NORTHERN REEDGRASS	T	
CALAMINTHA ARKANSANA	CALAMINT		
CALLITRICHE ANCEPS	ARCTIC WATER-STARWORT		

RARE PLANT STATUS LIST
NY Natural Heritage Program

SCIENTIFIC NAME	COMMON NAME	STATE LEGAL STATUS	FEDERAL STATUS
CAREX COLLINSII	COLLINS SEDGE	R	
CAREX COMPLANATA	HIRSUTE SEDGE	R	
CAREX CONJUNCTA	SOFT FOX SEDGE		
CAREX CRAWEI	CRAWE SEDGE	T	
CAREX CRYPTOLEPIS	NORTHEASTERN SEDGE		
CAREX CUMULATA	CLUSTERED SEDGE	R	
CAREX DAVISII	DAVIS SEDGE	R	
CAREX DECOMPOSITA	CYPRESS-KNEE SEDGE		C2
CAREX EMMONSII	EMMONS SEDGE	R	
CAREX EMORYI	EMORY SEDGE		
CAREX FLACCOSPERMA VAR GLAUCODEA	SEDGE	R	
CAREX FORMOSA	HANDSOME SEDGE	R	
CAREX FRANKII	FRANK SEDGE		
CAREX GARBERI	ELK SEDGE	R	
CAREX GRAVIDA	HEAVY SEDGE	R	
CAREX GYNOCRATES	NORTHERN BOG SEDGE	R	
CAREX HAYDENII	CLOUD SEDGE		
CAREX HITCHCOCKIANA	HITCHCOCK SEDGE		
CAREX HORMATHODES	SEDGE	R	
CAREX HOUGHTONIANA	SEDGE	R	
CAREX HYALINOLEPIS	SHORE-LINE SEDGE	E	
CAREX JAMESII	NEBRASKA SEDGE		
CAREX LAXIFLORA VAR SERRULATA	LOOSE FLOWERED SEDGE		
CAREX LIVIDA VAR RADICAULIS	LIVID SEDGE		

RARE PLANT STATUS LIST
NY Natural Heritage Program

SCIENTIFIC NAME	COMMON NAME	STATE LEGAL STATUS	FEDERAL STATUS
CAREX WIEGANDII	WIEGAND SEDGE	E	
CAREX WILLDENOWII	WILLDENOW SEDGE	R	
CARYA LACINIOSA	BIG SHELLBARK HICKORY		
CASSIOPE HYPNOIDES	MOSS-HEATHER		
CASTILLEJA COCCINEA	SCARLET INDIAN-PAINTBRUSH	T	
CEANOTHUS HERBACEUS	PRAIRIE REDROOT	T	
CHAEROPHYLLUM PROCUMBENS	SPREADING CHERVIL		
CHAMAECYPARIS THYOIDES	ATLANTIC WHITE CEDAR	R	
CHAMAELIRIUM LUTEUM	BLAZING-STAR	R	
CHASMANTHIUM LAXUM	SLENDER SPIKEGRASS		
CHEILANTHES LANOSA	WOOLY LIP-FERN	V	
CHELONE GLABRA VAR DILATATA	TURTLE-HEADS		
CHELONE GLABRA VAR ELATIOR	TURTLE-HEADS		
CHENOPODIUM RUBRUM	RED PIGWEED		
CHENOPODIUM STANDLEYANUM	GOOSEFOOT		
CIRSIUM ALTISSIMUM	TALL THISTLE		
CLEMATIS OCHROLEUCA	CURLY-HEADS		
CLITORIA MARIANA	BUTTERFLY-PEA		
COLLINSIA VERNA	BLUE-EYED-MARY		
COMMELINA ERECTA	SLENDER DAYFLOWER		
CORALLORHIZA STRIATA	STRIPED CORALROOT	E	
COREMA CONRADII	BROOM CROWBERRY	E	
COREOPSIS ROSEA	ROSE COREOPSIS	R	
CORNUS DRUMMONDII	ROUGH-LEAF DOGWOOD	T	

RARE PLANT STATUS LIST
NY Natural Heritage Program

SCIENTIFIC NAME	COMMON NAME	STATE LEGAL STATUS	FEDERAL STATUS
CYPRIPEDIUM CANDIDUM	SMALL WHITE LADYSLIPPER	E	3C
CYSTOPTERIS PROTRUSA	LOWLAND FRAGILE FERN	E	
DESCHAMPSIA ATROPURPUREA	MOUNTAIN HAIRGRASS		
DESCURAINIA PINNATA SSP BRACHYCARPA	NORTHERN TANSEY-MUSTARD		
DESMODIUM CILIARE	TICK-TREEFOIL	T	
DESMODIUM GLABELLUM	TALL TICK-CLOVER	T	
DESMODIUM HUMIFUSUM	SPREADING TICK-CLOVER		
DESMODIUM LAEVIGATUM	SMOOTH TICK-CLOVER		
DESMODIUM NUTTALLII	NUTTALL'S TICK-CLOVER		
DESMODIUM OBTUSUM	BEGGAR-LICE		
DESMODIUM PAUCIFLORUM	SMALL-FLOWERED TICK-CLOVER		
DIAPENSIA LAPPONICA	DIAPENSIA	T	
DICENTRA EXIMIA	BLEEDING-HEART	E	
DIGITARIA FILIFORMIS	SLENDER CRABGRASS	R	
DIOSPYROS VIRGINIANA	PERSIMMON	R	
DODECATHEON MEADIA	SHOOTING-STAR		
DRABA ARABISANS	ROCK-CRESS	R	
DRABA GLABELLA	ROCK-CRESS	E	
DRABA REPTANS	CAROLINA WHITLOW-GRASS	R	
DRACOCEPHALUM PARVIFLORUM	AMERICAN DRAGONHEAD	R	
DRYOPTERIS CELSA	LOG FERN	V	
DRYOPTERIS FRAGRANS	FRAGRANT CLIFF FERN	T	
ECHINODORUS TENELLUS VAR PARVULUS	BURHEAD		

RARE PLANT STATUS LIST
NY Natural Heritage Program

SCIENTIFIC NAME	COMMON NAME	STATE LEGAL STATUS	FEDERAL STATUS
ERIOPHORUM ANGUSTIFOLIUM SSP SCABRIUSCULUM	COTTONGRASS		
ERYNGIUM AQUATICUM	MARSH ERYNGO		
EUONYMUS AMERICANUS	AMERICAN STRAWBERRY-BUSH	T	
EUPATORIUM LEUCOLEPIS	WHITE BONESET	E	
EUPATORIUM RESINOSUM	PINE BARRENS BONESET		C2
EUPATORIUM ROTUNDIFOLIUM VAR OVATUM	ROUND-LEAF BONESET		
EUPATORIUM ROTUNDIFOLIUM VAR ROTUNDIFOLIUM	ROUND-LEAF BONESET		
EUTHAMIA GYMNOSPERMOIDES	FLAT-TOP GOLDENROD		
FESTUCA BRACHYPHYLLA	ALPINE FESCUE		
FESTUCA SAXIMONTANA	SHEEP FESCUE		
FIMBRISTYLIS CAROLINIANA	CAROLINA FIMBRY		
FIMBRISTYLIS CASTANEA	MARSH FIMBRY	T	
FIMBRISTYLIS PUBERULA	VAHL HAIRY FIMBRY		
FRASERA CAROLINIENSIS	GREEN GENTIAN	R	
GALACTIA REGULARIS	EASTERN MILK-PEA		
GALACTIA VOLUBILIS	DOWNY MILK-PEA		
GALIUM BREVIPES	MATTED BEDSTRAW		
GALIUM CONCINNUM	SHINING BEDSTRAW		
GALIUM KAMTSCHATICUM	NORTHERN WILD-LICORICE		
GENTIANA PUBERULENTA	PRAIRIE GENTIAN	V	
GENTIANA SAPONARIA	SOAPWORT GENTIAN	R	
GENTIANOPSIS PROCERA	FRINGED GENTIAN	I	
GEOCAULON LIVIDUM	PURPLE COMANDRA	T	

RARE PLANT STATUS LIST
NY Natural Heritage Program

SCIENTIFIC NAME	COMMON NAME	STATE LEGAL STATUS	FEDERAL STATUS
HOTTONIA INFLATA	FEATHERFOIL	T	
HYDRANGEA ARBORESCENS	WILD HYDRANGEA	R	
HYDRASTIS CANADENSIS	GOLDEN-SEAL	T	3C
HYDROCOTYLE VERTICILLATA	WATER-PENNYWORT	E	
HYPERICUM ADPRESSUM	CREEPING ST. JOHN'S-WORT	E	
HYPERICUM DENSIFLORUM	BUSHY ST. JOHN'S-WORT	E	
HYPERICUM DENTICULATUM	COPPERY ST. JOHN'S-WORT	E	
HYPERICUM DISSIMULATUM	ST. JOHN'S-WORT		
HYPERICUM GYMNANTHUM	ST. JOHN'S-WORT		
HYPERICUM HYPERICOIDES SSP MULTICAULE	ST. ANDREW'S CROSS	E	
HYPERICUM KALMIANUM	KALM'S ST. JOHN'S-WORT		
HYPERICUM PROLIFICUM	SHRUBBY ST. JOHN'S-WORT	T	
IPOMOEA PANDURATA	WILD POTATO-VINE		
IRIS PRISMATICA	SLENDER BLUE FLAG		
IRIS VIRGINICA VAR SHREVEI	SOUTHERN BLUEFLAG		
ISOETES MACROSPORA	LARGE-SPORED QUILLWORT	R	
ISOPYRUM BITERNATUM	FALSE RUE-ANEMONE		
ISOTRIA MEDEOLOIDES	SMALL WHORLED POGONIA	V	LE
JEFFERSONIA DIPHYLLA	TWIN-LEAF	R	
JUNCUS BRACHYCARPUS	SHORT-FRUIT RUSH		
JUNCUS DEBILIS	WEAK RUSH	T	
JUNCUS PLATYPHYLLUS	FLATLEAF RUSH		
JUNCUS STYGIUS SSP AMERICANUS	MOOR-RUSH		
JUNCUS SUBCAUDATUS	WOODS-RUSH	R	

RARE PLANT STATUS LIST
NY Natural Heritage Program

SCIENTIFIC NAME	COMMON NAME	STATE LEGAL STATUS	FEDERAL STATUS
LINDERNIA DUBIA VAR INUNDATA	FALSE-PIMPERNEL		
LINUM INTERCURSUM	SANDPLAIN WILD FLAX	T	
LINUM MEDIUM VAR TEXANUM	SOUTHERN YELLOW FLAX	T	
LINUM SULCATUM	YELLOW WILD FLAX	R	
LIPARIS LILIIFOLIA	LARGE TWAYBLADE	R	
LISTERA AURICULATA	AURICLED TWAYBLADE	E	C2
LISTERA AUSTRALIS	SOUTHERN TWAYBLADE	R	
LISTERA CONVALLARIOIDES	BROAD-LIPPED TWAYBLADE	V	
LITHOSPERMUM CANESCENS	HOARY PUCCOON		
LITHOSPERMUM CAROLINIENSE SSP CROCEUM	GOLDEN PUCCOON		
LITTORELLA AMERICANA	AMERICAN SHORE-GRASS		
LOBELIA NUTTALLII	NUTTALL'S LOBELIA	R	
LOISELEURIA PROCUMBENS	ALPINE AZALEA	E	
LUDWIGIA SPHAEROCARPA	LUDWIGIA	R	
LUZULA CAMPESTRIS VAR BULBOSA	HAIRY WOODRUSH		
LUZULA SPICATA	SPIKED WOODRUSH		
LYCOPODIUM CAROLINIANUM	CAROLINA CLUBMOSS	E	
LYCOPODIUM COMPLANATUM	NORTHERN RUNNING-PINE	V	
LYCOPODIUM SABINIFOLIUM	CYPRESS CLUBMOSS	T	
LYCOPODIUM SITCHENSE	SITKA CLUBMOSS	E	
LYCOPUS RUBELLUS	GYPSY-WORT		
LYGODIUM PALMATUM	CLIMBING FERN	E	
LYSIMACHIA HYBRIDA	LANCE-LEAVED LOOSESTRIFE	T	3C
LYSIMACHIA QUADRIFLORA	FOUR-FLOWERED LOOSESTRIFE		

RARE PLANT STATUS LIST
NY Natural Heritage Program

SCIENTIFIC NAME	COMMON NAME	STATE LEGAL STATUS	FEDERAL STATUS
OXYPOLIS RIGIDIOR	STIFF COWBANE		
PANICUM ACUMINATUM VAR WRIGHTIANUM	PANIC GRASS		
PANICUM ANCEPS	PANIC GRASS		
PANICUM FLEXILE	PANIC GRASS	T	
PANICUM LEIBERGII	PANIC GRASS		
PANICUM OLIGOSANTHES VAR OLIGOSANTHES	PANIC GRASS		
PANICUM SCABRIUSCULUM	PANIC GRASS		
PANICUM SCOPARIUM	VELVET PANIC GRASS		
PANICUM STIPITATUM	TALL FLAT PANIC GRASS		
PASPALUM LAEVE VAR CIRCULARE	FIELD BEADGRASS		
PASPALUM SETACEUM VAR SETACEUM	SLENDER BEADGRASS		
PEDICULARIS LANCEOLATA	SWAMP LOUSEWORT	R	
PELLAEA GLABELLA	SMOOTH CLIFF BRAKE	T	
PHACELIA DUBIA	SCORPION-WEED		
PHLOX MACULATA	WILD SWEET-WILLIAM	R	
PHLOX PILOSA	DOWNY PHLOX		
PHYLLITIS SCOLOPENDRIUM	HART'S-TONGUE FERN	E	
PHYSALIS PUBESCENS VAR INTEGRIFOLIA	GROUND-CHERRY		
PHYSALIS VIRGINIANA	VIRGINIA GROUND-CHERRY		
PHYSOCARPUS OPULIFOLIUS VAR INTERMEDIUS	NINEBARK	R	
PILEA FONTANA	CLEARWEED		
PINGUICULA VULGARIS	BUTTERWORT	R	

RARE PLANT STATUS LIST
NY Natural Heritage Program

SCIENTIFIC NAME	COMMON NAME	STATE LEGAL STATUS	FEDERAL STATUS
POLYGONUM SETACEUM VAR INTERJECTUM	SWAMP SMARTWEED		
POLYGONUM TENUE	SLENDER KNOTWEED	R	
POLYMNIA UVEDALIA	BEAR'S-FOOT	T	
POLYSTICHUM LONCHITIS	NORTHERN HOLLY-FERN	V	
POPULUS HETEROPHYLLA	SWAMP COTTONWOOD	T	
PORTERANTHUS STIPULATUS	AMERICAN IPECAC		
POTAMOGETON ALPINUS	NORTHERN PONDWEED	R	
POTAMOGETON CONFERVOIDES	PONDWEED	R	
POTAMOGETON FILIFORMIS VAR ALPINUS	SLENDER PONDWEED		
POTAMOGETON FILIFORMIS VAR OCCIDENTALIS	SHEATHED PONDWEED	R	
POTAMOGETON HILLII	HILL'S PONDWEED	T	SC
POTAMOGETON OGDENII	OGDEN'S PONDWEED	E	
POTAMOGETON PULCHER	SPOTTED PONDWEED		
POTAMOGETON STRICTIFOLIUS	STRAIGHT-LEAF PONDWEED		
POTENTILLA ANSERINA SSP PACIFICA	SILVERWEED	R	
POTENTILLA PARADOXA	BUSHY CINQUEFOIL	E	
PRENANTHES BOOTTII	BOOTT'S RATTLESNAKE-ROOT	E	SC
PRENANTHES CREPIDINEA	NODDING RATTLESNAKE-ROOT		
PRENANTHES NANA	DWARF RATTLESNAKE-ROOT	T	
PRENANTHES RACEMOSA	GLAUCOUS RATTLESNAKE-ROOT		
PRIMULA MISTASSINICA	BIRD'S-EYE PRIMROSE	T	SC
PROSERPINACA PECTINATA	COMB-LEAVED MERMAID-WEED	R	

RARE PLANT STATUS LIST
NY Natural Heritage Program

SCIENTIFIC NAME	COMMON NAME	STATE LEGAL STATUS	FEDERAL STATUS
RHYNCHOSPORA CEPHALANTHA	CAPITATE BEAKRUSH		
RHYNCHOSPORA CHALAROCEPHALA	LOOSE-HEADED BEAKRUSH		
RHYNCHOSPORA GLOBULARIS	GLOBE BEAKRUSH		
RHYNCHOSPORA GRACILENTA	SLENDER BEAKRUSH		
RHYNCHOSPORA INUNDATA	DROWNED HORNED RUSH	E	
RHYNCHOSPORA PALLIDA	PALE BEAKRUSH		
RHYNCHOSPORA TORREYANA	TORREY'S BEAKRUSH		
RIBES HIRTELLUM VAR SAXOSUM	NORTHERN GOOSEBERRY		
ROSA ACICULARIS SSP SAYI	PRICKLY ROSE	R	
ROTALA RAMOSIOR	TOOTH-CUP	R	
RUBUS CHAMAEMORUS	CLOUDBERRY		
RUDBECKIA HIRTA VAR HIRTA	BLACK-EYED-SUSAN		
RUMEX HASTATULUS	HEART SORREL	T	
RUMEX MARITIMUS VAR FUEGINUS	GOLDEN DOCK	T	
RUMEX MARITIMUS VAR PERSICARIOIDES	GOLDEN DOCK	T	
SABATIA ANGULARIS	ROSE-PINK	E	
SABATIA CAMPANULATA	SLENDER MARSH-PINK	E	
SABATIA DODECANDRA	SEA-PINK	V	
SAGINA DECUMBENS	PEARLWORT		
SAGITTARIA CALYCINA VAR SPONGIOSA	SPONGY ARROWHEAD	E	
SAGITTARIA TERES	QUILL-LEAF ARROWHEAD	E	
SALIX CORDATA	SAND DUNE WILLOW	T	
SALIX HERBACEA	DWARF WILLOW	E	

RARE PLANT STATUS LIST
NT Natural Heritage Program

SCIENTIFIC NAME	COMMON NAME	STATE LEGAL STATUS	FEDERAL STATUS
SCUTELLARIA INCANA	HOARY SKULLCAP		
SCUTELLARIA INTEGRIFOLIA	HYSSOP-SKULLCAP		
SCUTELLARIA NERVOSA	VEINED SKULLCAP		
SCUTELLARIA PARVULA VAR LEONARDII	SMALL SKULLCAP	R	
SCUTELLARIA PARVULA VAR PARVULA	SMALL SKULLCAP		
SCUTELLARIA SERRATA	SHOWY SKULLCAP		
SEDUM INTEGRIFOLIUM SSP LEEDYI	ROSE SEDUM	E	
SEDUM ROSEA	ROSEROOT	E	
SEDUM TELEPHIOIDES	LIVE-FOREVER		
SESUVIUM MARITIMUM	SEA PURSLANE	E	
SISYRINCHIUM MUCRONATUM	MICHAUX BLUE-EYED-GRASS		
SMILAX PSEUDOCHINA	FALSE CHINA-ROOT	E	
SMILAX PULVERULENTA	JACOB'S-LADDER	E	
SOLIDAGO CUTLERI	ALPINE GOLDENROD		
SOLIDAGO ELLIOTTII	COASTAL GOLDENROD		
SOLIDAGO ERECTA	SLENDER GOLDENROD		
SOLIDAGO HOUGHTONII	HOUGHTON'S GOLDENROD	E	PT
SOLIDAGO OHIOENSIS	OHIO GOLDENROD	R	
SOLIDAGO RIGIDA	STIFF-LEAF GOLDENROD	T	
SOLIDAGO RUGOSA SSP ASPERA	ROUGH GOLDENROD		
SOLIDAGO RUGOSA VAR SPHAGNOPHILA	TALL HAIRY GOLDENROD		
SOLIDAGO SPATHULATA VAR RACEOMSA	MOUNTAIN GOLDENROD		

RARE PLANT STATUS LIST
NY Natural Heritage Program

SCIENTIFIC NAME	COMMON NAME	STATE LEGAL STATUS	FEDERAL STATUS
TRIOSTEUM ANGUSTIFOLIUM	FEVERWORT		
TRIPHORA TRIANTHOPHORA	NODDING POGONIA	V	
TRISETUM MELICOIDES	MELIC-OATS	E	
TROLLIUS LAXUS SSP LAXUS	SPREADING GLOBEFLOWER	*	3C
UTRICULARIA BIFLORA	TWO-FLOWERED BLADDERWORT	R	
UTRICULARIA FIBROSA	FIBROUS BLADDERWORT	R	
UTRICULARIA GEMINISCAPA	HIDDENFRUIT BLADDERWORT	R	
UTRICULARIA JUNCEA	RUSH BLADDERWORT	R	
UTRICULARIA RADIATA	SMALL FLOATING BLADDERWORT	R	
UVULARIA PUBERULA	MOUNTAIN BELLWORT	E	
VACCINIUM BOREALE	HIGH-MOUNTAIN BLUEBERRY	R	
VACCINIUM CESPITOSUM	DWARF BLUEBERRY	E	
VACCINIUM ULIGINOSUM SSP PUBESCENS	BOG BILBERRY	R	
VALERIANA SITCHENSIS SSP ULIGINOSA	MARSH VALERIAN	T	
VALERIANELLA CHENOPODIIFOLIA	GOOSEFOOT CORN-SALAD		
VALERIANELLA RADIATA	BEAKED CORN-SALAD		
VALERIANELLA UMBILICATA	CORN-SALAD		
VERBESINA ALTERNIFOLIA	WINGSTEM	T	
VERNONIA GIGANTEA	TALL IRONWEED		
VERONICA PEREGRINA SSP XALAPENSIS	NECKWEED		
VIBURNUM DENTATUM VAR VENOSUM	SOUTHERN ARROWWOOD		
VIBURNUM EDULE	SQUASHBERRY	R	
VIBURNUM NUDUM	POSSUM-HAW	T	

APPENDIX D

1989 RECYCLING PLAN

1989 RECYCLING PLAN

Town of Southampton, New York

May 1, 1989

Printed on Recycled Paper

1989 RECYCLING PLAN
TOWN OF SOUTHAMPTON, NEW YORK

TABLE OF CONTENTS

		Page
1.0	SUMMARY	
	1.1 Introduction and Background	1-1
	1.2 Phased Implementation Approach	1-3
	1.3 Drop-off Depot Improvements and Materials Handling	1-4
	1.4 Roles and Responsibilities	1-5
2.0	PHASE 1: NEWSPAPER, BULKY SCRAP METALS AND YARD WASTE	
	2.1 Mandatory Recycling Measures for Phase 1	2-1
	2.2 Park and Beach Recycling Program	2-5
3.0	PHASE 2: CANS, GLASS, CORRUGATED CARDBOARD AND OFFICE PAPER	
	3.1 Quantities	3-1
	3.2 Cans and Glass Containers	3-2
	3.3 Corrugated Cardboard	3-5
	3.4 Office Paper	3-6
4.0	DROP-OFF DEPOT IMPROVEMENTS AND MATERIAL HANDLING	
	4.1 Phase 1 Improvements	4-1
	4.2 Phase 2 Improvements	4-3
	4.3 Materials Handling and Processing	4-4
5.0	ROLES AND RESPONSIBILITIES	
	5.1 Program Coordination	5-1
	5.2 Promotion and Education	5-2
	5.3 Operations	5-4
6.0	1989 SCHEDULE	
	6.1 Phase 1	6-1
	6.2 Phase 2	6-2
	6.3 Implementation Time Table	6-2

LIST OF APPENDICES

APPENDIX A MANDATORY RECYCLING ORDINANCE

APPENDIX B WASTE STREAM COMPOSITION ESTIMATES

APPENDIX C RECYCLABLES MARKETS SURVEY

1.0 SUMMARY

1.1 INTRODUCTION AND BACKGROUND

The Town of Southampton is now developing a Solid Waste Action Management Plan (SWAMP) to address all aspects of its long-term solid waste needs. Waste reduction and recycling will be an integral part of this plan, in accordance with the hierarchy established in the New York State Solid Waste Management Plan, and Part 360 Regulations. The Town has also recognized that there is an immediate need to reduce the quantity of solid waste disposed at the North Sea Landfill (Landill). Recycling will not only be an important part of the SWAMP, but also represents an opportunity in which immediate action can be taken that will divert significant quantities of material from the Landfill. For this reason, and in accordance with the Town's Consent Order with the New York State Department of Environmental Conservation (DEC) for Construction of Cell 3 at the Landfill, this plan for the implementation of mandatory recycling activities in 1989 has been developed.

While proposed activities for 1989 are quite aggressive, and will require considerable effort and a definite committment of resources this year, this is only the beginning. It is anticipated that the SWAMP will recommend continued growth of these efforts, the addition of other materials and further development of a recycling infrastructure, and promotional and enforcement activities in subsequent years.

The Town recognizes that initial expenditures will be needed to make the program a success. However, when considering the "avoided cost savings" realized as new landfill space is saved through diversion of each ton of recyclables captured, this program is considered to be very cost effective, and capable of significantly reducing the overall cost increases that are associated with current environmentally sound waste disposal methods.

For several years, the Town of Southampton has conducted a successful voluntary recycling program. In 1988 alone, over 5,000 tons of recyclables and organic materials were diverted through the Town's recycling program. In addition, there is a ban on the disposal of con-

- Commercial wastes are collected by private haulers.

- An estimated doubling of the population is experienced between May and September, which significantly increases the quantity of waste generated during these months.

1.2 PHASED IMPLEMENTATION APPROACH

A two phased approach has been developed for the implementation of the 1989 recycling program. Phase 1 will consist of activities that can be implemented quickly by expanding the existing voluntary program. Phase 1 will be started in June. Phase 2 will involve the implementation of new program measures that are more complicated to implement and require more time for development. For Phase 2, mandatory recycling will be initiated for cans and glass containers generated by residents as well as corrugated cardboard and office paper.

The phased approach has two added advantages. First, by phasing in the program, the public will not be overwhelmed with too many new responsibilities, which could have a negative impact on participation. Second, the Town will be able to expand and develop the facilities needed to handle the anticipated additional quantities of recyclables in an orderly manner.

In particular, the following measures will be undertaken during each Phase.

Phase 1 (June)

- Enact Town ordinance revisions for the Phase 1 mandatory recycling program to be initiated in 1989. The ordinance was enacted on April 25, 1989 (see Appendix A for a copy of the ordinance).

- Distribute informational newsletter concerning the SWAMP and new recycling programs to all residential property owners.

- Initiate mandatory recycling of newspaper, bulky scrap metals and yard wastes Townwide.

- Initiate curbside pick up of newspaper every other Thursday for all residents who use a private hauler service.

- Distribute instructional flyers concerning participation in the mandatory program concurrent with program start up.

1.4 ROLES AND RESPONSIBILITIES

There are three general areas into which the responsibilities in the recycling program fall: program coordination, promotion/education and operations.

The Town Board has appropriately assumed the program coordination role. Program coordination responsibilities include: providing the impetus for program implementation, coordinating all aspects of the program, and providing information and assistance when requested. While it is expected that the East End Regional Recycling Program Manager will help in these efforts, the Town may need to hire a recycling coordinator for Southampton or arrange for recycling coordination activities to be distributed among various departments to meet these responsibilities.

Promoting active public participation is an absolute must in any recycling program that captures recyclables primarily through source separation. Residents and businesses need to separate out their recyclables and properly prepare them for collection in accordance with program instructions. The Town is responsible for raising public awareness of the program and educating the public on how to recycle.

The operations role will be filled by the private haulers, the Town's Sanitation Department and possibly by other private organizations. The haulers have agreed to provide recyclables collection services to their customers. During 1989, the Sanitation Department will continue to operate, maintain and monitor the drop-off depots and transfer the recyclables to market. The Department may also need to take on new activities including organic wastes composting, and possibly some can and glass container sorting if necessary. With the implementation of the mandatory recycling plan, the Sanitation Department's role is likely to expand due to increased drop-off depot use, greater quantities and new sorting responsibilities. This new level of effort will be determined as the proposed activities are implemented.

2.0 PHASE 1: NEWSPAPERS, BULKY SCRAP METALS AND YARD WASTES

Phase 1 of the 1989 recycling program focuses on initiating mandatory recycling with improved collection for newspaper, ferrous and nonferrous bulky scrap metals ("white goods", metal doors, old pipes, etc.), grass and other yard wastes as well as developing a park and beach area recycling program. Phase 1 is delineated as those measures that can be substantially implemented by the start of the 1989 summer season. It should be noted that the Town has not waited for the completion of this report to begin implementing the program, and many activities for Phase 1 implementation are underway. Phase 2 will involve implementation of mandatory recycling of cans, glass containers, corrugated cardboard and office paper.

2.1 MANDATORY RECYCLING MEASURES FOR PHASE 1

The rationale for selecting newspaper, bulky scrap metal, grass and other yard waste for Phase 1 includes: 1) the relative ease with which these materials can be collected; 2) these materials can be handled using the Town's existing infrastructure for recycling initially; and 3) the current status of the Town's voluntary recycling program will make the transition to mandatory participation for these materials easier. By beginning with measures that were substantially developed through the voluntary programs, the new mandatory measures can be implemented quickly.

The basic collection and marketing infrastructure for newspaper, scrap metal and yard waste already exists. These items are collected separately on a voluntary basis by the private haulers who collect residential wastes. Also, drop-off centers for these materials are conveniently located at the landfill and transfer stations for self-haulers. The Sanitation Department currently markets the newspapers. Scrap metals, i.e., white goods, metal doors, pipes, etc., are stock piled and are currently being sold to a private recycling firm. Grass, leaves, wood chips and potato wastes are also stock piled, where they partially decompose. Last year the Town recycled about 5,000 tons of

TABLE 2-1

PHASE 1 MATERIALS
GENERATION AND RECYCLING
IN 1988

Material	Tons Generated (1)	Tons Recycled
Newspaper	4950	907 (2)
Scrap Metals	3800	702 (3)
Yard Wastes	10900	3060 (4)

NOTES:

1. Assumes the following theoretical percentages of the total waste stream:
   - Newspaper = 7%
   - metal = 5% (Includes all metal waste other than ca
   - Yard waste = 16%

   See Appendix B for further information.

2. Based on scalehouse tonnage records of actual newspaper sold to markets.

3. Based on scalehouse tonnage records of actual scrap metal sold to markets.

4. Assumes all yard waste (brush, wood chips, leaves and landscaping waste) separately delivered to the landfill is composted except brush which has been burned in the past. The total tons of yard waste diverted for the whole Town is not shown since only yard waste brought to the Landfill site has been quantified. Substantial quantities are also collected and stock piled separately at the Hampton Bays and West Hampton transfer stations, but these quantities are unknown at this time.

The metal category, on the other hand, is heterogeneous and different metal items are often physically integrated with other materials making recycling of metal difficult. Therefore, recovery rates for scrap metal is not expected to be as high.

Newspapers were recycled at an average of 23 percent of the estimated total quantity of newspaper generated on an annualized basis in 1988. Although this recycling rate is enviable for a voluntary program, it can be expected that recycling will increase when the program becomes mandatory. Table 2-2 presents a range of potential recycling rates for newspaper, and the tons that may be diverted at 40, 60 and 80 percent recycling.

Experience with other programs has shown that the quantity of most materials collected will increase during the initial months of a new mandatory program and then level off at a higher rate. For the mandatory newspaper program for example, Southampton may expect to be recycling as much as 60 percent or more after the initial start-up period depending on public response to promotion and enforcement measures.

Yard Wastes

Presently, the Town has provided drop-off centers at the Landfill for various organic wastes including brush, leaves, grass, wood chips and remnants from potato processing. Landscapers and some homeowners bring separated grass clippings and brush to the drop-off centers. The Highway Department collects leaves and chips some brush and tree limbs. A few private haulers have indicated that they only collect yard wastes by special pick-up.

To institute mandatory recycling of these wastes, the Town's recycling ordinance will ban grass, leaves and brush from disposal in the Landfill. These materials will go to the recycling drop-off centers located next to the Landfill on the same site. Landscapers and private haulers will be required to observe this ban, and to chip or otherwise size reduce bulky yard wastes. By publicizing the need for these measures and enforcing the ban, nearly all of these materials could be diverted for composting. The drop-off of grass, leaves and other yard

TABLE 2-2

POTENTIAL RECYCLING
RATES FOR NEWSPAPER

1988 Months	1988 Recycling Tons (1)	1988 Recycling Rate (2)	40% Recycling (Tons)	60% Recycling (Tons)	80% Recycling (Tons)
JAN	0	0%	106	159	212
FEB	0	0%	108	162	216
MAR	0	0%	134	201	268
APR	62	16%	152	228	304
MAY	73	16%	183	274	365
JUN	114	22%	204	306	408
JUL	107	19%	228	342	456
AUG	130	24%	221	332	442
SEP	122	25%	194	291	389
OCT	93	25%	152	228	304
NOV	105	28%	151	227	303
DEC	101	28%	145	218	291
TOTAL	907	23% (3)	1978	2968	3958

NOTES:

1. The quantities shown are based on 1988 scalehouse data (see Appendix B). Since this plan is for 1989 only, it was assumed that generation would remain the same for 1989.

2. Recycling Rate = Tons Recycled / Tons Generated. Tons Generated are estimated to be 7% of the total waste stream (see Appendix B).

3. Average monthly recycling rate.

contraversial since many villages have ordinances banning curbside collection for aesthetic reasons. Existing village ordinances which forbid curbside collection may need to be modified to explicitly exclude recyclable materials from that mandate. It should be noted that the Town does not have jurisdiction to require the villages to do this. However, the Town will mandate that recyclables must be separated prior to disposal in the Landfill. The Town has already requested that the villages consider these changes to their laws.

3) Specific requirements for resident preparation of newspaper to facilitate collection and increase market value are necessary. These requirements will include:

   - Newspaper only at this time. No magazines, telephone books, paper bags, junk mail, or other paper wastes.

   - Tying newspaper bundles in 2 directions with strong string only (no paper or plastic grocery bags).

   - Placing the bundled newspapers in visible locations at the curb (exact location to be specified).

4) Consider certain temporary improvements at the drop-off centers for more efficient operation. Section 4.0 describes these improvements in more detail.

2.2 PARK AND BEACH RECYCLING PROGRAM

Southampton is known for its pristine beaches and parks which draw large crowds during the summer. Placing specially designed receptacles at the parks and beaches will not only divert material from waste disposal, but will also provide an excellent opportunity for raising awareness of recycling with the summer crowds.

There will be two elements to Southampton's parks and beaches recycling program. Receptacles for collection of newspapers will be placed at most or all of the public locations where containers for trash collection are serviced by the Town. These receptacles will be specially constructed and serviced by the Town's Parks and Recreation Department. The second element will consist of a test project for the collection of glass and aluminum beverage containers along with newspaper. At two locations, Tiana Beach in East Quogue and Ponquogue Beach in Hampton Bays, special receptacles will be placed for cans and glass containers. It is unknown at this time how effective these receptacles

1989 RECYCLING PLAN

SOUTHAMPTON, NEW YORK

BEACH AND PARKS RECYCLING CENTER

CONCEPTUAL DESIGN

NOTES:

1. THESE RECEPTACLES CAN BE BUILT AS DETACHABLE MODULAR UNITS WITH THE POSSIBILITY OF ADDING MORE FOR OTHER MATERIALS.
2. THE PARKS AND RECREATION DEPARTMENT WILL DEVELOP APPROPRIATE LABELS

3.0 PHASE 2: CANS, GLASS, CORRUGATED CARDBOARD AND OFFICE PAPER

Phase 2 of the 1989 Recycling Program will add recycling of cans, glass containers (bottles and jars), corrugated cardboard and office paper to the program in late Fall. The exact date for start-up has not yet been determined. Implementing Phase 2 will require more time and attention than Phase 1 since these materials have been recycled only to a limited extent or not at all; and their collection and marketing is relatively more complex.

3.1 QUANTITIES

Table 3-1 presents 1988 estimated generation and recycling quantities for cans, glass containers, cardboard and office paper. Significant improvement in the quantity of material recycled can be expected through the implementation of mandatory recycling for these materials. Tables 3-2, 3-3, 3-4, and 3-5 were developed show recycling quantities that would be diverted at recycling rates of 20%, 40%, 60% and 80% on a month by month basis for cans and glass containers, cardboard and office paper.

Can and glass container recycling tends to be more cumbersome and time consuming for the waste generators (residents) who separate these materials. Therefore a lower recycling rate is expected for cans and glass than is expected for newspaper. After the initial start-up period, the Town may expect 20 to 40 percent or more recycling of cans and glass containers.

Corrugated cardboard and office paper recycling rates are difficult to estimate since each commercial establishment and office is different in terms of waste generation characteristics and likelihood of compliance. Many commercial businesses already recycle cardboard, because it is cost-effective to do so. Generally, if a business or institution does recycle, the recycling rate for that business will be high. Therefore, with good promotion and enforcement, higher overall diversion rates may be achieved in time. Given these variables, it is quite

TABLE 3-1

PHASE 2 MATERIALS
GENERATION AND RECYCLING
IN 1988

Material	Tons Generated (1)	Tons Recycled (2)
Cardboard	6185	420
Glass	4330	107
Cans	3090	15
Office Paper	4950	(3)

NOTES:

1. Assumes the following theoretical percentages of the total waste stream: including recyclables:
   - Cardboard = 9%
   - Glass = 6%
   - Cans = 5%
   - Office paper = 7%

   See Appendix B for further information.

2. Based on scalehouse tonnage records for the Town's program only. Significant quantities may also be recycled through private efforts as well. Recycling rates can be better quantified through further characterization studies.

3. The Town office building is recycling office paper and has recycled an estimated 1,500 lbs. as of February. Also, since paper recyclers will pay for higher grades of office paper, it is likely that office paper is recycled on a private basis to some extent. Recycling rates for office paper can be quantified through further waste characterization studies.

TABLE 3-2

POTENTIAL RECYCLING
RATES FOR CARDBOARD

1988 Months	1988 Recycling Tons (1)	1988 Recycling Rate (2)	20% Recycling (Tons)	40% Recycling (Tons)	60% Recycling (Tons)	80% Recycling (Tons)
JAN	9	3%	66	132	198	265
FEB	14	4%	68	135	203	270
MAR	27	6%	84	168	251	335
APR	21	4%	95	190	285	380
MAY	47	8%	114	228	342	457
JUN	54	8%	127	255	382	510
JUL	77	11%	143	285	428	570
AUG	61	9%	138	276	415	553
SEP	32	5%	121	243	364	486
OCT	24	5%	95	190	285	380
NOV	21	4%	95	189	284	379
DEC	33	7%	91	182	273	363
TOTAL	420	6% (3)	1237	2473	3710	4948

NOTES:

1. The quantities shown are based on 1988 scalehouse data (see Appendix B). Since this plan is for 1989, it was assumed that generation would remain the same for 1989.

2. Recycling Rate = Tons Recycled / Tons Generated. Tons Generated are estimated to be 9% of the total waste stream (see Appendix B).

3. Average monthly recycling rate.

TABLE 3-3

POTENTIAL RECYCLING
RATES FOR GLASS

1988 Months	1988 Recycling Tons (1)	1988 Recycling Rate (2)	20% Recycling (Tons)	40% Recycling (Tons)	60% Recycling (Tons)	80% Recycling (Tons)
JAN	0	0%	46	93	139	185
FEB	0	0%	47	95	142	189
MAR	0	0%	59	117	176	235
APR	0	0%	67	133	200	266
MAY	0	0%	80	160	240	320
JUN	0	0%	89	178	268	357
JUL	26	5%	100	200	299	399
AUG	12	3%	97	193	290	387
SEP	11	3%	85	170	255	340
OCT	29	9%	67	133	200	266
NOV	8	2%	66	133	199	265
DEC	21	7%	64	127	191	254
TOTAL	107	5% (3)	867	1732	2599	3463

NOTES:

1. The quantities shown are based on 1988 scalehouse data (see Appendix B). Since this plan is for 1989, it was assumed that generation would remain the same for 1989.

2. Recycling Rate = Tons Recycled / Tons Generated. Tons Generated are estimated to be 6% of the total waste stream (see Appendix B).

3. Average monthly recycling rate.

TABLE 3-4

POTENTIAL RECYCLING
RATES FOR CANS

1988 Months	1988 Recycling Tons (1)	1988 Recycling Rate (2)	20% Recycling (Tons)	40% Recycling (Tons)	60% Recycling (Tons)	80% Recycling (Tons)
JAN	0	0%	33	66	99	132
FEB	0	0%	34	68	101	135
MAR	0	0%	42	84	126	167
APR	0	0%	48	95	143	190
MAY	0	0%	57	114	171	228
JUN	0	0%	64	127	191	255
JUL	3	1%	71	143	214	285
AUG	2	1%	69	138	207	276
SEP	2	1%	61	121	182	243
OCT	4	2%	48	95	143	190
NOV	1	1%	47	95	142	189
DEC	3	1%	45	91	136	182
TOTAL	15	1% (3)	619	1237	1855	2472

NOTES:

1. The quantities shown are based on 1988 scalehouse data (see Appendix B). Since this plan is for 1989, it was assumed that generation would remain the same for 1989.

2. Recycling Rate = Tons Recycled / Tons Generated. Tons Generated are estimated to be 5% of the total waste stream (see Appendix B).

3. Average monthly recycling rate.

TABLE 3-5

POTENTIAL RECYCLING
RATES FOR OFFICE PAPER (1)

1988 Months	20% Recycling (Tons)	40% Recycling (Tons)	60% Recycling (Tons)	80% Recycling (Tons)
JAN	53	106	159	212
FEB	54	108	162	216
MAR	67	134	201	268
APR	76	152	228	304
MAY	91	183	274	365
JUN	102	204	306	408
JUL	114	228	342	456
AUG	111	221	332	442
SEP	97	194	291	389
OCT	76	152	228	304
NOV	76	151	227	303
DEC	73	145	218	291
TOTAL	990	1978	2968	3958

NOTES:

1. The actual amount of office paper being recycled has not been quantified. These quantities are based on estimated generated tons of office paper being 7% of the total waste stream (see Appendix B).

materials are then collected separately. Alternatively, the different cans and glass containers can be collected mixed together ("commingled"), but separate from the garbage, and then later sorted into the various components. Each approach has its advantages and disadvantages.

A separate container program places more responsibility on the homeowner. Typically (but not in all cases), fewer homeowners will participate for this reason. Although several collection variations are possible, traditionally, special sectionalized collection vehicles are used to keep the materials separated. However, depending on how the materials are contained, it is possible to use ordinary garbage trucks. The primary advantage of this approach is that it may not require a full Materials Recovery Facility (MRF) to sort and process collected materials since this sorting has already been done by the homeowner. Thus, homeowner willingness to provide this separation may result in overall cost savings, since higher revenues will be received with minimum processing cost.

Commingling is easier for the homeowner and therefore participation rates tend to be higher. In addition, since the materials are collected together, existing garbage trucks can be utilized. Also, many more recyclable components can be added to the commingled stream without over burdening the residents with many different containers. A disadvantage is that commingled recyclables must be sorted into its various components before an end-user will purchase them. Sorting the materials has a cost associated with it. This sorting, as well as other processing in preparation for market, is done at what is called a Materials Recovery Facility (MRF). Some privately operated MRFs operating in Western Long Island, have expressed interest in taking commingled materials collected in Southampton. Currently, private MRFs are charging from about $10 to $35 per ton f.o.b. the facility to process these materials. Processing of cans and glass containers is discussed in more detail in Section 4.0.

At this time, it is likely that a commingled collection approach will be preferred for several reasons although this has not yet been finally determined yet. First, the higher participation rates expected with commingled collection may divert greater quantities of recyclables

Department staff (about 4 hours labor every 2 weeks would be required), who would then market them in the same way that has been done for materials collected for the voluntary program.

The bagged approach may be less costly than the commingled approach for the Town. The private haulers can use existing collection equipment with either method and there should be no difference in collection cost. The Town could save in a number of ways. The bagged materials are already separated, so minimal processing is necessary, and revenues will be generated from the sale of the recyclables. Comparatively, the commingled material must be trucked to a MRF in western Long Island. These MRFs are currently charging between $10 and $35 per ton to accept and process the commingled material. Therefore, the bagged approach may be the most cost effective.

However, the extra responsibilities the bagged approach places on the home owner may have a negative impact on the overall participation rate. This possiblity and actual cost savings would be quantified and evaluated to ascertain if the bagged approach is a viable option for the Town.

If considered, such a pilot program would not be undertaken before the end of the summer.

3.3 CORRUGATED CARDBOARD

Corrugated cardboard is generated in significant quantities (see Table 3-1). Most of it is generated by commercial establishments such as grocery stores and restaurants. Moreover, there are potential difficulties with space for storing cardboard at smaller establishments, and it may be necessary to phase in mandatory recycling of cardboard over a longer period of time.

Collection of corrugated cardboard will be the joint responsibility of the commercial establishments and their haulers. Each commercial establishment will need to keep cardboard separate from its trash and make arrangements with its garbage collection service to pick up the cardboard separately. The private hauler can then drop-off the card-

Over twenty-five recycling companies located on Long Island identified by Malcolm Pirnie through past contacts were surveyed to ascertain which paper grades are currently marketable. None indicated an interest in mixed waste paper separated from the general municipal waste stream. On the other hand, seven recycling firms will pay for office paper grades including: computer paper, white and colored stationery, photocopy paper, etc., (see Appendix C, Recycling Markets Survey).

The source of this paper includes: corporate offices, law firms, real estate brokerages, municipal office buildings, schools, banks, personnel services and business services. It should be noted that an office paper recycling program was started at the Town office building in January of this year. An estimated 1,500 pounds of office paper has been recycled as of April. In addition, the Town uses recycled paper for its letterhead and is currently looking for recycled photocopy and computer paper brokers. By creating markets for recycled products we can close the loop and expand markets for recyclables diverted from the waste stream.

An important aspect of office paper recycling is developing readily available outlets for the paper generators. Most paper recycling markets contacted will deal directly with the individual businesses and institutions. Many also offer their expert assistance in setting up collection systems within the office itself. Alternatively, since office paper has value, the private haulers will be encouraged to provide office paper collection services as well. Given the current market situation it may not be necessary for the Town to get directly involved in the collection and marketing aspects of office paper recycling.

Paper buyers have indicated that regardless of the size of the office, they may provide storage containers and pick them up when full. Given the Town's interest in diverting as much waste as possible, all offices and businesses, regardless of size, that generate office paper waste should be required to recycle after a reasonable time has been allowed for working out any special difficulties. Appendix C contains a preliminary list of potential markets that may be contacted for assistance.

4.0 DROP-OFF CENTER IMPROVEMENTS AND MATERIALS HANDLING

With the introduction of mandatory recycling, the Town will need to improve and expand the existing recyclables drop-off centers for both self-haulers and private haulers. A minimal sorting capability for the commingled or bagged cans and glass containers collected by the private haulers may also need to be developed in 1989 or later depending on the curbside collection method selected. Sorting and possible processing capabilities will be evaluated in conjunction with long-term planning to determine the most cost effective approach.

The drop-off centers currently used by self-haulers are located at the three transfer stations and the Landfill site. Improvements to these centers will focus on making each more convenient, attractive and efficient to boost public participation and reduce operating costs. Improvements will take place in two stages: 1) short-term improvements needed for 1989 and 2) longer term improvements associated with the SWAMP study recommendations. Initial work will include site planning to assure compatibility with long-term needs. Since the 1989 implementation program is moving very quickly, it is important that initial activities and expenditures be well planned and coordinated so that positive momentum is achieved, while at the same time providing for an orderly and cost effective transition. A new drop-off center is recommended for the private haulers and self-haulers at the North Sea Landfill site. The center will be designed for direct tipping from collection vehicles into transfer containers so that minimum Town labor will be required.

Ultimate designs for all drop-off center improvements and processing facilities will be considered after the collection methods have been fully defined and the SWAMP has been developed. This section describes, in general terms, the improvements to be considered for 1989.

4.1 PHASE 1 IMPROVEMENTS

This section describes changes to the existing drop-off centers and new composting activities that should be undertaken with the implementation of Phase 1; i.e. the introduction of mandatory recycling of news-

This pilot effort will be an important part of the 1989 activities, since it will provide the Town with an opportunity to develop and test the capability to compost separated organics of various kinds. The experience gained will therefore be valuable towards determining the Town's long-term composting possibilities.

4.2 PHASE 2 IMPROVEMENTS

As the collection and handling aspects of the program are better defined, drop-off center improvements at the North Sea site will be designed and constructed. These improvements are necessary to replace the existing recycling area that will be discontinued when Cell 2 is capped, and to increase the capability to handle the larger quantities of materials that are anticipated when the full mandatory recycling program is in place.

A new site plan for North Sea will be developed to show the new recycling center location and access roads integrated with the existing disposal facilities, and will allow room for future recycling activities recommended in the SWAMP. Further, it may be desirable to review conceptual site plans for the transfer stations at some point.

The existing Town drop-off system for grass, yard wastes and other organic materials is sufficient for both the private haulers and self-haulers for 1989, but will be reorganized to provide an area for pilot composting. However, it will probably be desirable to require that all brush from private haulers and landscapers be chipped before it is accepted.

Accommodation for carter delivery of newspapers, glass, cans, corrugated cardboard and possibly office paper will be needed at the proposed new bi-level center at North Sea to make drop-off and transport to market more efficient and cost effective. Some of these materials will be collected for the first time in Southampton in 1989. The private haulers will be collecting cans and glass containers commingled or in bags and will need a separate area with containers for their own use. The present dump and load method used is inadequate for the new volume of materials and will be replaced with new facilities.

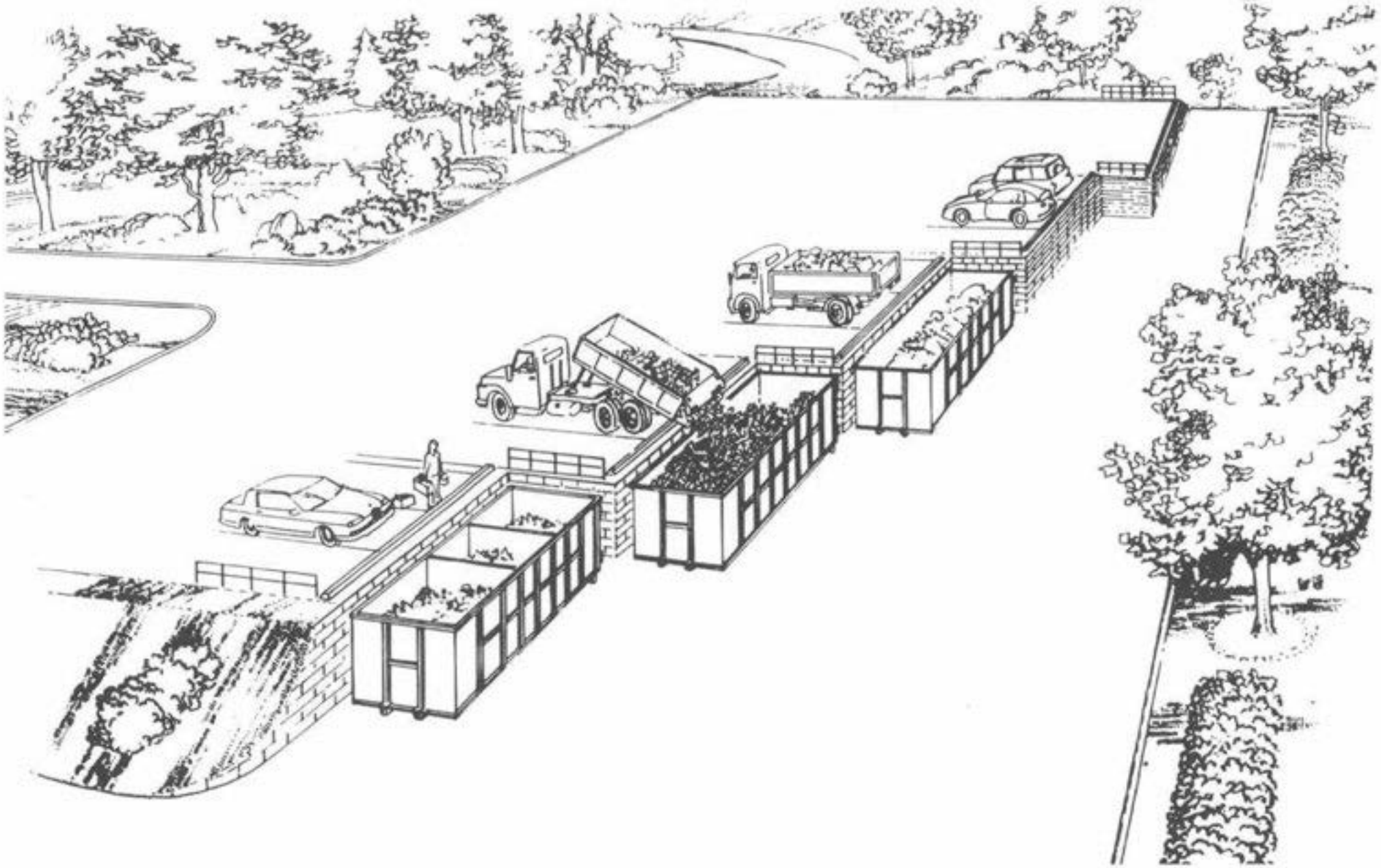

SOUTHAMPTON RECYCLING PLAN FOR 1989

GENERIC DROP-OFF SITE

CONCEPTUAL DESIGN

NOT TO SCALE

MALCOLM PIRNIE

feasible. Several other private firms will also likely be interested in this possibility. Moreover, Brookhaven is currently negitiating a MRF contract with a private firm and there are possibilities for cooperation there and/or with the other Towns on the East End. This will be explored further in the SWAMP study, but will require a concerted evaluation to assure a workable long term arrangement that is cost effective. Alternatively, the Town's Sanitation Department could sort the materials, particularly for the short-term, although this option may not be cost effective. All of these options will be taken into consideration as the program is implemented.

5.0 ROLES AND RESPONSIBILITIES

The success of the expanded recycling program depends on the contributing efforts of various parties. These roles can be classified under three general headings: program coordination, promotion and education, and operations. This section provides a general outline the responsibilities of each.

5.1 PROGRAM COORDINATION

Program coordination involves the integration of program planning, promotion, education, collection, processing and marketing activities into one, working program. The primary coordination responsibilities are; initiating new activities by gaining the active participation and cooperation of various parties including the public and private haulers; promoting the program; and serving as a central source for information that all participants can draw on.

The Town Board has at this time appropriately assumed this role, as it has direct responsibility for meeting the requirements of the Consent Order. Activities recently undertaken by the Town in its capacity as Program Coordinator include:

- Initiating recycling promotion by distributing "Stop and Recycle for Southampton" bumper stickers.
- Submitting two grant applications to the NYSDEC to fund recycling activities including:
  1) A Community Assistance Competitive Grant for promotional activities,
  2) A Local Resource Reuse and Recovery Program (LRRRP) Grant Application for recycling promotion costs submitted with the four other Eastern Long Island Towns.
- Acquiring the services of Malcolm Pirnie, Inc. to develop this plan and assist the Town with program implementation.
- Initiating discussions with neighboring Towns, the County, potential markets and other parties with similar interests.

High participation and capture rates are only gained by energizing the potential that already exists to make recycling happen. The East End Towns grant application, referencing a 1983 survey by the League of Women Voters, indicated that, "90% of households are willing to recycle" (LRRRP Grant Application, p. 23). This tremendous community interest should lead to good participation, but it will only develop with an organized effort and the committment of resources to promotion and education.

As indicated above, the Town Board, as part of its program coordination role, will promote the program and public education. The promotional/educational materials for the kick-off of Phase 1 are being drafted and readied for distribution. These materials include:

- A Newsletter distributed to all residential property owners. The newsletter will provide basic information regarding development of the SWAMP and will also detail the upcoming Phase 1 mandatory measures.

- An instruction brochure sent by the private haulers with their customer invoices which details how newspapers should be prepared for collection and when they will be collected.

- A similar instructional flyer will be handed out to self-haulers at the Landfill and transfer stations.

Additionally, many other promotional opportunities, such as newspaper articles and radio interviews, will arise in time. Full advantage will be taken of these opportunities as they arise.

Subsequent to Phase 1 kick-off, other promotional materials and opportunities will be developed to promote Phase 2 activities and raise awareness of and maintain participation in the ongoing Phase 1 activities.

These promotional/educational efforts will be fully defined and developed in time in coordination with the fine tuning of the program. Additional promotional/educational materials that are being considered by the Town Board at this time include:

- Promotional/educational campaigns for corrugated cardboard and office paper recycling directed at appropriate commercial establishments, businesses and institutions.

- Removing major contaminants.
- Sorting materials or other processing prior to transporting to markets (if deemed appropriate).

Determination of possible additional personnel and equipment needs, will be made as the program is implemented.

6.0 1989 SCHEDULE

The implementation schedule for the plan was shaped by the requirements of the Consent Order and logistical considerations for adapting collection and material handling to the new mandatory efforts.

The Consent Order designates that mandatory recycling of newspaper, cardboard, glass, yard wastes, grass, metals, miscellaneous paper and brush must be implemented by December 31, 1989. Logistical considerations include:

- Current recycling collection and processing practices.
- Doubling of the population during summer months.
- Considerations for changing collection practices.
- Existing drop-off center capacity and expansion potential.
- Time factors concerning construction of drop-off center improvements.
- Time needed to evaluate various options to assure cost effectiveness of new program measures.
- Time required to create and distribute various promotional information.

6.1 PHASE 1

As previously discussed, for Phase 1, mandatory recycling will be implemented in June for newspaper, bulky scrap metals, and yard wastes. The park and beach recycling programs will also start in early summer.

Phase 1 work is already underway. Discussions with the private haulers have led to the development of the plan for collection. A newsletter to be sent to all residents, and instructional brochures for participating in Phase 1, have been drafted and will be printed in time for start-up on June 12 and 15, 1989. Also, the Parks and Recreation Department has indicated that it can initiate parks and beaches recycling by the beginning of the 1989 summer season.

Phase 1	Target Completion Dates
4) Villages consider amendments to permit curbside recyclables collection (as necessary).	April/May
5) Develop and distribute newsletter and instructional flyers for Phase 1 mandatory recycling measures.	May/June
6) Ongoing public relations activities to promote the program as opportunities arise.	Ongoing
7) Prepare for increased recyclables quantities at drop-off centers.	June 15
8) Design, construct and place "Recycling Rescue Stations" at selected parks and beaches.	May/June
9) Implement pilot windrow composting of organic wastes.	June/July
10) Kick-off mandatory Phase 1 program.	June 15

Phase 2	Target Completion Dates
1) Design new bi-level drop-off center improvements at the North Sea Landfill site and develop construction approach.	May-July
2) Complete bidding procedures as necessary for the construction of the new drop-off center.	July
3) Construct new drop-off center.	August/September
4) Develop Town's promotional campaign for recycling of corrugated cardboard and office paper.	July/August
5) Market arrangements for increased quantities of corrugated cardboard, cans and glass containers.	September/October

APPENDIX A

MANDATORY RECYCLING ORDINANCE

APPENDIX A

MANDATORY RECYCLING LAW

RESOLVED, that the Town Clerk hereby is authorized to publish a Notice of Adoption as follows:

NOTICE OF ADOPTION

TAKE NOTICE that a public hearing was held by the Town Board of the Town of Southampton on April 25, 1989 at the Town Hall, 116 Hampton Road, Southampton, New York to hear any and all persons either for or against "A LOCAL LAW amending Chapter 37 (Garbage and Waste Facilities) of the Town Code of the Town of Southampton by adding new sections regarding mandatory recycling."

LOCAL LAW NO. OF 1989

A LOCAL LAW amending Chapter 37 (Garbage and Waste Facilities) of the Town Code of the Town of Southampton by adding new sections regarding mandatory recycling.

BE IT ENACTED by the Town Board of the Town of Southampton as follows:

Addition of a Legislative Findings Section

SECTION 1. LEGISLATIVE FINDINGS

Whereas the conservation of recyclable materials is now a necessity in order to conserve natural resources, and the cost of solid waste disposal is ever increasing and available landfill facilities are rapidly decreasing, it is the intent of the Town Board of the Town of Southampton to establish a resource recovery system for the mandatory separation of recyclables from garbage and rubbish within the Town. Such a program will reduce both the amount of solid waste to be disposed of and the cost of landfill disposal and extend the life of the landfill. In addition, the separation, collection and sale of recyclable materials will reduce the financial burden of solid waste disposal.

When such newspaper is prepared for disposal by anyone other than the ultimate disposer, such as a carter, it should be securely bundled and tied in packages not exceeding fifty (50) pounds with a rope or cord sufficient in strength to facilitate handling.

y. No vegetative yard waste as defined herein shall be deposited at any Town of Southampton disposal area or Town transfer station unless such vegetative yard waste is separated from any and all solid waste, trash or rubbish. Such vegetative yard waste is to be deposited only at designated areas within such Town disposal area or transfer station.

z. No white goods as defined herein shall be deposited at any Town of Southampton disposal area or Town transfer station unless such white goods are separated from any and all solid waste, trash, rubbish or vegetative yard waste. Such white goods are to be deposited only at designated areas within such Town disposal area or transfer station.

SECTION IV. VALIDITY

If any section or subsection, paragraph, clause, phrase or provisions of this law shall be adjudged invalid or held unconstitutional by any court of competent jurisdiction, any judgement made thereby shall not affect the validity of this law as a whole or any part thereof other than the part or provisions so adjudged to be invalid or unconstitutional.

SECTION V. EFFECTIVE DATE

This local law shall take effect June 12, 1989 upon filing with the Secretary of State pursuant to the Municipal Home Rule.

BY ORDER OF THE TOWN BOARD
TOWN OF SOUTHAMPTON
KENNETH H. THOMMEN, TOWN CLERK

APPENDIX B

WASTE COMPOSITION ESTIMATES

APPENDIX B
WASTE STREAM COMPOSITION ESTIMATES

A municipal solid waste stream consists of different material components which make up various percentages of the total waste stream. The particular quantity of each component in the waste stream determines the overall composition of the waste stream. Knowing the waste stream composition is necessary information for developing solid waste management plans and recycling programs. Therefore, it is important to quantify the various types of materials in the waste stream to enable proper planning.

In an effort to quantify and characterize the solid waste stream of Southampton, the Town has relied on a solid waste compostion study. In 1986, H2M was hired by the Town to conduct the solid waste characterization study. The characterization of the waste stream was based on residential waste that was received and sampled at the North Sea Landfil. Table A-1 summarizes the results of the composition study.

The component breakdown used to characterize the Town's waste stream is general and lacks the identification and quantification of many materials, especially recyclables. In particular, recoverable materials such as newspaper, glass containers, tin and aluminum cans, scrap metals, and plastic containers (PET, HDPE, etc.) are not broken out for quantification. Since the data obtained through the H2M waste composition study is very general in terms of waste component breakdown, other information was examined to characterize the waste stream.

Another data source, available through Franklin Associates, provides a breakdown of the waste stream. They have examined national waste composition data to determine national and state waste composition averages. Table B-2 summarizes both national and New York State waste composition averages. The information in Table B-2 cannot represent accurate estimates of Southampton's waste stream composition but rather serves as a guide for comparing waste stream composition. However, since the composition estimates in Table B-2 are general in nature, it is still difficult to identify the amounts of recyclables that can potentially be recovered from the waste stream.

TABLE B-1

H2M WASTE COMPOSITION STUDY RESULTS FOR SOUTHAMPTON'S 1986 WASTE STREAM[1]

Material	Catagory (Residential)
Paper	38.2%
Corrugated	(11.5)
Other Paper	(26.6)
Glass	14.0%
Metal	9.1%
Ferrous	(4.2)
Non-Ferrous	(4.9)
Plastics	8.6%
Miscellaneous	30.1%
Yard Waste	(11.8)
Food Waste	(10.9)
Wood	(4.0)
Textiles	(3.2)
Other	(0.2)
Total	100.0%

Note:
(1) Source: H2M "Town of Southampton Solid Waste Characterization Program", April 1988.

TABLE B-2

FRANKLIN ASSOCIATES, LTD.
ESTIMATES OF MUNICIPAL SOLID WASTE STREAM COMPOSITION[1]

Material	Percentage of Total Waste Stream (National Average)	Percentage of Total Waste Stream (New York State Average)
Paper and Paperboard	37.1	42.0
Glass	9.7%	9.6
Metal		9.2
Ferrous	8.3%	-
Aluminum	1.1%	-
Other Ferrous	0.2%	-
Plastics	7.2%	6.5
Yard Waste	17.9%	16.1
Food Waste	8.1%	7.3
Wood	3.8%	3.4
Rubber/Leather	2.5%	-
Textiles	2.1%	1.9
Other	0.1%	5.0
Miscellaneous Organics	1.8%	-
Total	100.0%	100%

Note:
(1) Source: Franklin Associates, Ltd. "Characterization of Municipal Solid Waste in the United States", July 1986. New York State data based on national waste stream composition data developed by Franklin Associates.

TABLE B-3

MALCOLM PIRNIE, INC.
ESTIMATE OF THE PRESENT WASTE STREAM COMPOSITION FOR SOUTHAHPTON[1]

Material	Composition Percentage of Total Waste Stream
Paper	
Newspaper	7%
Office Paper	7%
Corrugated	9%
Other Paper	15%
Glass	
Containers (all colors)	6%
Other	2%
Metal	
Cans (ferrous/aluminum)	5%
Scrap Metal	5%
Plastics	
PET/HDPE	3%
Other	4%
Yard Waste	16%
Food Waste	9%
Wood	3%
Rubber/Leather	2%
Textiles	3%
Miscellaneous Inerts	3%
Total	100.0%

Note:
(1) Developed by Malcolm Pirnie, Inc.

APPENDIX C

RECYCLABLES MARKETS SURVEY

Markets for Recyclables on Long Island

Company	Location	Telephone	Materials Accepted	Price	Materials Not Accepted
Amco Plastic Materials	Farmingdale	293-1600	polystyrene pet		plastic drink containers plastic bags
Anchor Waste Paper Corp.	Westbury	334-3132	newspapers	$.50/100 lb	
Brookhaven Recycling Corp.	Patchogue	475-4788	aluminum brass copper steel corrugated	must see must see must see must see $0	newspapers glass
DeMatteo Salvage Co., Inc.	W. Babylon	643-7940	high-grade paper corrugated aluminum aluminum cans ferrous metals	varies $0 $.35-.40/lb $.15/lb must see	newspaper glass
Ecosphere Recycling	Hicksville	935-5852	not recycling anymore		
Ed's Salvage, Inc.	Ronkonkoma	981-5522	high-grade paper	varies	
Environmental Resource Recycling	Yaphank	924-3388	aluminum cans plastic shrink wrap large plastic bags soda bottles glass bottles (sorted by color) cardboard cases	wcb	milk bottles
E.W.G. Glass Recovery/ Jamaica Paper Stock	Jamaica	718-657-0900	sorted glass high-grade paper corrugated cans (small amts)	varies varies varies varies	newspapers

Markets for Recyclables on Long Island
(Continued)

Company	Location	Telephone	Materials Accepted	Price	Materials Not Accepted
Harmon Associates Corp.	Westbury	997-3400	check notes		
International Recycling	Glen Cove	671-7100	wcb		
IPF Management	Great Neck	746-7575	newspapers	$0	metals
			corrugated	$10/ton	glass
			computer paper	$.30/lb	
			other paper	$.01-.02/lb	
Jet Paper Stock	Central Islip	234-7100	corrugated	$0	
			news	$0	
Lobosco	Flushing	718-358-2098	newspaper	$.25/100 lb	cardboard
			computer paper	varies	glass
			metals	varies	
			car batteries	$1	
			radiators	varies	
Long Island Recycling	W. Babylon	643-7245	wcb		
M-B Recycling Unlimited	N. Bellmore	785-4044	newspaper	$.10/100 lb	
			cardboard	$0	
Mid Island Salvage Corp.	Deer Park	595-9819	metals		aluminum cans
					tin cans
North Shore Salvage Corp.	Freeport	623-4521	brass	$.35-.50/lb	paper
			copper	$.70-.90/lb	
			aluminum	$.38-.50/lb	
North Shore Salvage Corp.	New Hyde Park	746-8454	see above		

Markets for Recyclables on Long Island
(Continued)

Company	Location	Telephone	Materials Accepted	Price	Materials Not Accepted
Omni Technical Services* (John Cameron)	Uniondale		commingled (glass & metal)	community pays: $35/ton (delivered to Omni)	
			newspapers	depends on contract terms	
P&P Paper Recycling	Old Bethpage	249-8577	no answer		
PK Metals	Coram	732-6403	aluminum (no cans)	$.40/lb	
			brass	$.35/lb	
			copper	$.60-.90/lb	
			steel	$.005-.02/lb	
Rutigliano Paper Stock	Westbury	334-3132	newspapers	$.50/100	
Segal Enterprises	Riverhead	727-6500	no answer		
Suffolk Tab Salvage, Inc.	Bayport	654-8606	high-grade paper	varies	newspapers
Twin County Recycling	Hicksville	935-5852	concrete	varies	
			asphalt	varies	
USA Recycling	Kings Park	368-5533	collects materials municipalities can't get rid of and arranges for disposal; municipalities pay $20/ton		
Westbury Paper Stock	Westbury	333-2211	newspaper	$0	
			high-grade paper	$30-150/ton	
			corrugated		

*Omni would investigate the feasibility of opening a small, satellite processing center in eastern Long Island if there would be a sufficient supply of recyclables.

§ 37-11. Construction or alteration of on-site sewage disposal system.

§ 37-12. Construction standards for on-site sewage disposal systems.

§ 37-13. Inspections.

§ 37-14. Fees for scavenger waste.

§ 37-15. Penalties for offenses.

[HISTORY: Adopted by the Town Board of the Town of Southampton 7-9-85 as Local Law No. 4, 1985.[1] Amendments noted where applicable.]

GENERAL REFERENCES

Junk dealers and storage of junk — See Ch. 41.
Littering — See Ch. 43.

Be it enacted by the Town Board of the Town of Southampton as follows:

ARTICLE I

Sanitary Landfill Stations and Garbage Transfer Stations

[Amended 2-11-86 by L.L. No. 3, 1986; 4-22-86 by L.L. No. 6, 1986; 5-12-87 by L.L. No. 3, 1987[2]]

§ 37-1. Applicability.

The rules and regulations of this local law shall apply to all town disposal areas, including sanitary landfill stations and garbage transfer stations.

[1] Editor's Note: This local law also superseded former Ch. 37, Garbage Disposal Areas, adopted 5-4-71 as Ord. No. 52, as amended.

[2] Editor's Note: Section 4 of this law provided that the usage fees prescribed by § 37-4 shall not take effect until January 1, 1988.

F. It shall be unlawful for any person to deposit any waste, garbage or rubbish of any kind on land of the Town of Southampton outside the areas designated for the deposit of those materials.

G. No person shall dump, throw or place in any manner any rubbish, refuse, dirt or any material whatsoever in or upon such disposal area, nor at a time except that indicated by such sign or signs or directions.

H. Any oral directions given by any person in charge of any disposal area shall take precedence over any sign or displayed directions.

I. It shall be unlawful for any person to deposit any waste, garbage or rubbish outside the gates of any disposal area at any time, unless containers for that purpose have been provided and designated.

J. It shall be unlawful for any person other than the disposal area personnel to set fire to any material within the disposal area.

K. It shall be unlawful for any person to remove any materials from the disposal area.

L. No person shall deposit any animal carcass in or upon any transfer station, except that an animal carcass may be buried if immediately interred by the person bringing such carcass to a sanitary landfill in a ditch at least two (2) feet depth, and provided that the same is immediately covered to the level of the surrounding area with earth.

M. No person shall remove, destroy, alter, deface or otherwise injure any sign or signs placed or erected within any public disposal area except upon and by the direction of the Commissioner of Public Works.

N. All material transported to a disposal area shall be covered and secured so as not to disperse material during transportation of such material.

O. All vehicles requiring permits under § 37-3B shall meet the regulations of the Suffolk County Department of Health.

V. The disposal of land-clearing debris, construction debris or demolition debris shall be prohibited at any town disposal area.

W. The Town Board hereby delegates to the Commissioner of Public Works the authority to adopt rules to prohibit the disposal of any waste materials, in addition to those materials expressly prohibited by this local law, where the Commissioner finds that waste materials would be harmful to the public welfare or would adversely impact the remaining capacity of the sanitary landfill station. Said rules shall be published in the official newspaper of the town and posted on the Town Clerk's signboard. Said rules shall be effective upon such posting and publishing.

§ 37-3. Permits for garbage vehicles.

A. All garbage haulers, roll-off containers and all other vehicles required to pay a usage fee under § 37-4A(3) shall display a vehicle permit as herein required, which shall be affixed to the right side of the front bumper.

B. Permits will be issued by the Town Clerk's office after payment of the following fees for each vehicle:

(1) Garbage hauler and all other vehicles required to pay a usage fee under § 37-4A(3): two hundred fifty dollars ($250.) for the first vehicle and one hundred dollars ($100.) for each additional vehicle. A "garbage hauler" is a vehicle utilized in the business of collecting and transporting solid waste of any kind.

(2) Roll-off containers.

(a) Zero (0) to twenty (20) cubic yards: fifty dollars ($50.).

(b) More than twenty (20) yards to forty (40) yards: one hundred dollars ($100.).

(c) More than forty (40) yards: two hundred fifty dollars ($250.).

(f) Whether the applicant or any of the persons having a financial interest in the business has ever been convicted of a felony or misdemeanor or has ever had an operator's license revoked or suspended in this or any other state.

(g) Proof of financial responsibility in the event of injury to persons or property by reason of the negligent operation of any vehicle used in the business.

(h) The Commissioner of Public Works may require any additional information he may deem necessary from an individual applicant as is necessary to administer the regulations enumerated in § 37-2 of this chapter.

(i) The type of permit applied for.

F. Said permits shall be issued with an individual identification number which shall be assigned to each vehicle and shall not be transferable. Said permit shall be kept available within the vehicle for inspection upon demand.

G. Any permit issued hereunder may be suspended or revoked by the Town Board after notice to the applicant and a hearing, where one (1) or more of the following grounds exist:

(1) The applicant has not been found to be fit, willing and able to properly perform the service proposed and the applicant is unable to provide sufficient and suitable equipment to meet the requirements of the business.

(2) Issuance of the permit is deemed not to be in the best interests of the town or its residents.

(3) The applicant has failed and refused, without reasonable cause, to collect and dispose of material except in a situation where a contract between the applicant and his customer has been lawfully terminated.

(4) The applicant has failed to account for or pay, without reasonable cause, any fees or bills due to the town.

§ 37-4. Usage fees.[1]

A. All vehicles utilizing a town disposal area shall be responsible for the following usage fees:

(1) Passenger cars and station wagons: one dollar ($1.) per visit.

(2) Pickup trucks, vans and trailers of one-half (½) ton's capacity or less: one dollar ($1.) per visit.

(3) Garbage haulers, roll offs and all other vehicles: twenty dollars ($20.) per ton, including any part of a ton.

B. The usage fee prescribed in Subsection A(1) and (2) above shall not apply where a yearly pass is displayed on the left front bumper of the vehicle. The yearly fees are as follows:

(1) Passenger cars and station wagons: twenty dollars ($20.) per calendar year without proration.

(2) Pickup trucks, vans and trailers of one-half (½) ton's capacity or less: twenty dollars ($20.) per calendar year without proration.

C. The method and procedure for collection of the fees prescribed by this section shall be established by the Town Board by resolution.

§ 37-5. Removal of surplus fill.

A. When available, surplus fill from the grounds of the sanitary landfill areas may be removed by municipal governing bodies under the following conditions:

(1) Said fill shall consist of either sand or marl, as determined by the loading machine operator.

(2) Said material shall be dug and loaded only by the town owned loading machines operated by disposal area personnel.

---

[1] Editor's Note: Section 4 of L.L. No. 3, 1987 provided that the usage fees in this section shall take effect January 1, 1988.

ALTERATION — The repair, modification or replacement of any component of an on-site sewage disposal system.

EXCLUDED WASTE — The following forms of waste are considered "excluded waste":

A. Industrial waste.

(Cont'd on page 3709)

B. The discharge of excluded waste into an on-site sewage disposal system shall be prohibited in the town.

§ 37-10. Transportation of scavenger waste.

A. No person shall engage in the removal of scavenger waste from any on-site septic system in the town without a valid permit issued by the Town Clerk and the Suffolk County Department of Health Services.

B. Any applicant for a permit as required by Subsection A of this section shall file a sworn application with the Town Clerk. Said application shall be on a form provided by the Town Clerk and shall contain the name and address of the applicant, the type, model, capacity (in gallons) and registration number of all vehicles to be used. Additionally, such form shall state:

"I, _____, being duly sworn, state and depose that I am familiar with the provisions of Chapter 37, Article II, Scavenger Waste, of the Town Code of the Town of Southampton. I will report the address and exact location of all on-site sewage disposal systems pumped by me or my business within the Town of Southampton as required by Chapter 37, Article II. I will comply with all other provisions of Chapter 37, Article II. I am aware that failure to comply will result in the assessment of a civil penalty of two hundred fifty dollars ($250.) for each violation."

C. The permit fee for the permit required by Subsection A of this section shall be two hundred fifty dollars ($250.) per vehicle. This fee shall be collected by the Town Clerk before the permit is issued. A permit shall be issued for each vehicle to be utilized by the applicant.

D. Each person with a permit under the provisions of this section shall file on the last Friday of each month, on a form to be provided by the Town Clerk, a report for each vehicle with the Town Clerk, stating the address, Suffolk County Tax Map

posal Systems as then established by the Suffolk County Department of Health Services.

B. All new construction shall be located as prescribed by the Suffolk County Department of Health Services and at a location where pumping can occur without trespassing on lands of another owner unless an express easement for that purpose over another owner's premises exists.

C. All on-site sewage disposal systems shall be covered in a manner that permits inspection as provided for herein.

§ 37-13. Inspections.

A. Every five (5) years, or sooner if conditions require, on-site sewage disposal systems shall be inspected by qualified inspectors employed by the town. A copy of this inspection report shall be provided to the owner. This requirement shall not apply to on-site sewage disposal systems in use on the effective date of this local law until said systems are altered or pumped. However, nothing herein shall prevent a lawful inspection of an existing on-site sewage disposal system where an inspector has reason to believe that an existing system may be causing actual or potential pollution of groundwater or surface water, contamination of drinking water supply, nuisance problems or other public health hazards.

B. The conduct of inspections shall be subject to all applicable laws. Five (5) days' written notice is to be given to the owner that an inspection will be made.

C. No civil claim shall lie against the town for any damages resulting from any inspection as authorized herein.

D. An inspector may order whatever remedial action is necessary to abate actual or potential pollution of groundwater or surface water, contamination of drinking water supply, nuisance problems or other public health hazards. The time for compliance shall be specified. Failure to comply with an inspector's order shall be a violation of this local law.

elected to waive the usage fee for the depository of certain recyclables at the Town disposal areas.

Section 37-4 D is hereby added to Section 37-4 to read as follows:

37-4 D: The usage fee prescribed in Subsection A above shall be waived to the extent that the material brought in consists of clean white paper, newspaper or clean flattened cardboard. This exemption shall apply only when all such material is separated from non-qualifying material.

SECTION 2. Effective Date

This Local Law shall take effect upon filing with the Secretary of State pursuant to the Municipal Home Rule Law.

656. The following resolution was introduced by Councilman Gil seconded by Councilwoman Seaman and duly adopted with the following recorded vote: All in favor.

RESOLVED, that the Town Clerk hereby is authorized and directed to publish the Notice of Adoption as follows:

NOTICE OF ADOPTION

TAKE NOTICE, that a public hearing was held by the Town Board of the Town of Southampton on July 12, 1988 at 1:00 P.M. at the Town Hall, 116 Hampton Road, Southampton,

SECTION 2. Effective Date

This Local Law shall take effect upon filing with the Secretary of State pursuant to the Municipal Home Rule Law.

BY ORDER OF THE TOWN BOARD
TOWN OF SOUTHAMPTON, NEW YORK
KENNETH H. THOMMEN, TOWN CLERK

657. The following resolution was introduced by Councilwoman Neumann seconded by Councilwoman Seaman and duly adopted with the following recorded vote: All in favor.

RESOLVED, that the Town Clerk is hereby authorized to publish the following Notice of Public Hearing:

NOTICE OF PUBLIC HEARING

TAKE NOTICE, that a public hearing will be held by the Town Board of the Town of Southampton on August 9, 1988 at 1:00 P.M. at the Town Hall, 116 Hampton Road, Southampton New York to consider a Grant of Slope/Conservation Easement offered by Jaro Construction Corp. to the Town of Southampton, pertaining to the 120 foot wide "Slope Conservation Easement", as shown on the major subdivision map entitled Hildebrandt Estates", situate at Hampton Bays, pursuant to Section 247 of the General Municipal Law of the State of New York.

TOWN OF SOUTHAMPTON
1987 WASTE STREAM SUMMARY

MONTH	BRUSH		GARBAGE		MISCELLANEOUS		WOOD CHIPS		SAND		LEAVES		POTATOES		TIRES		LAND-SCAPING		WHITE GOODS OUT*		CARDBOARD OUT*		DIRT		TOTAL WITH RECYCLABLES		TOTAL WITHOUT RECYCLABLES	
	TONS	TPD	TONS	TPD	TONS	TPD	TONS	TPD	TONS	TPD	TONS	TPD	TONS	TPD	TONS	TPD	TONS	TPD	TONS	TPD	TONS	TPD	TONS	TPD	TONS	TPD	TONS	TPD
JAN	148	4.7	3535	114.0	72	2.3	78	2.5	6	0.2	17	0.6	6	0.2	21	0.7	0	0.0	0	0.0	0	0.0	0	0.0	3880	125.2	3880	125.2
FEB	185	6.6	3149	112.5	24	0.8	57	2.0	0	0.0	6	0.2	0	0.0	13	0.5	5	0.2	0	0.0	0	0.0	0	0.0	3438	122.8	3438	122.8
MAR	249	8.0	4003	129.1	315	10.1	43	1.4	88	2.8	86	2.8	0	0.0	18	0.6	5	0.1	0	0.0	0	0.0	0	0.0	4806	155.0	4806	155.0
APR	317	10.6	4584	152.8	99	3.3	92	3.1	109	3.6	218	7.3	0	0.0	17	0.6	92	3.1	44	1.5	0	0.0	0	0.0	5572	185.7	5527	184.2
MAY	321	10.4	5851	188.7	115	3.7	75	2.4	137	4.4	143	4.6	8	0.2	40	1.3	117	3.8	36	1.1	27	0.9	0	0.0	6869	221.6	6867	219.6
JUN	327	10.9	5984	199.5	83	2.8	102	3.4	96	3.2	19	0.6	0	0.0	3	0.1	180	6.0	76	2.5	28	0.9	0	0.0	6897	229.9	6794	226.5
JUL	285	9.2	7224	233.0	57	1.9	74	2.4	30	1.0	11	0.4	1	0.0	5	0.2	238	7.7	83	2.7	37	1.2	0	0.0	8045	259.5	7926	255.7
AUG	245	7.9	6834	220.5	89	2.9	71	2.3	38	1.2	2	0.1	30	1.0	5	0.2	157	5.1	79	2.6	27	0.9	0	0.0	7577	244.4	7471	241.0
SEP	207	6.9	5792	193.1	81	2.7	111	3.7	136	4.5	0	0.0	42	1.4	6	0.2	162	5.4	69	2.3	16	0.5	13	0.4	6635	221.2	6550	218.3
OCT	261	8.4	4677	150.9	81	2.6	72	2.3	34	1.1	54	1.7	29	0.9	5	0.2	175	5.6	70	2.3	15	0.5	45	1.4	5518	178.0	5413	175.3
NOV	157	5.2	4082	136.1	26	0.9	78	2.6	11	0.4	352	11.7	75	2.5	14	0.5	74	2.5	69	2.3	5	0.2	104	3.5	5046	168.2	4917	163.9
DEC	113	3.6	3926	126.6	33	1.1	83	2.7	36	1.1	221	7.1	9	0.3	14	0.4	19	0.6	38	1.2	7	0.2	5	0.2	4502	145.2	4452	143.6
TOTAL	2814		59641		1075		935		719		1130		199		161		1224		564		161		156		68379		66063	
TPD AVERAGE**		7.7		163.4		2.9		2.6		2.0		3.1		0.5		0.4		3.4		1.5		0.4		0.5		188.5		180.5
PERCENT OF TOTAL WASTE STREAM	4.1%		86.7%		1.6%		1.4%		1.0%		1.6%		0.3%		0.2%		1.8%		0.8%		0.2%		0.2%		100.0%		96.9%	

* These are recycling quantities from the scalehouse record book

** Based on 365 days/year

TABLE 1

MAJOR MASS BURN (FIELD-ERECTED) VENDORS

Vendor	U.S. Licensee for the Following Technology:
American Energy Corp.	Steinmuller (Germany)
American Ref-Fuel	Vereinigte Kesselwerke AG (Germany)
Babcock and Wilcox	Detroit Stoker (USA)
Basic Engineering	
Blount	Widmer & Ernst (Switzerland)
Cadoux Inc.	
Clear Air, Inc.	
Combustion Engineering	de Bartolomeis (Italy)
Comtro	
Ecolaire Combustion	Bruun & Sorensen (Denmark)
Foster Wheeler	Detroit Stoker (USA)
General Electric	
Harbert-Triga	Triga (France)
Katy-Seghers	Seghers (Belgium)
KTI	
Morse Boulger	
Ogden Martin	Martin Gmbh (Germany)
Riley Energy	Takuma, C. Itoh (Japan)
Sigoure Freres	
Synergy Systems	
Technochem	Tecnitalia S.p.A (Italy)
Vicon	
Waste Management	Volund (Denmark)
Westinghouse	O'Connor (USA)
Wheelabrator	Von Roll (Switzerland)

References: Solid Waste and Power Magazine, August 1988.
Power Magazine Database Issue, November 1988.

TABLE 2
(continued)

REPRESENTATIVE U.S. MASS BURN FIELD-ERECTED FACILITIES

Location	Design Capacity (tpd)	Material Recovered	Energy Recovered	Year Operational
Nashville, TN	1120	--	Steam and Electricity	1974
Layton, UT	400	--	Steam	1988
Alexandria, VA	975	--	Electricity	Under Construction
Hampton, VA	200	--	Steam	1980
Mt. Vernon, WA	175	Ferrous Metal	Electricity	1988

References: 1988-1989 Resource Recovery Yearbook.

TABLE 3

REPRESENTATIVE U.S. MASS BURN MODULAR FACILITIES

Location	Design Capacity (tpd)	Material Recovered	Energy Recovered	Year Operational
Dyersburg, TN	100	--	Steam	1980
Hohenwald, TN	50	--	Steam	1988
Lewisburg, TN	60	--	Steam	1980
Carthage, TX	40	--	Steam	1986
Center, TX	40	--	Steam	1986
Gatesville, TX	13	Ferrous and other metals	Steam	1980
Palestine, TX	25	Ferrous and other metals	Steam	1980
Waxahachie, TX	50	--	Steam	1982
Rutland, VT	240	--	Electricity	1987
Harrisonburg, VA	100	--	Steam	1982
Newport News, VA	40	Ferrous and other metals	Steam	1980
Salem, VA	100	Aluminum	Steam	1978
Almena, WI	80	Ferrous Metal	Steam and Electricity	1986
New Richmond, WI	115	--	Steam and Electricity	1987

References: 1988-1989 Resource Recovery Yearbook.

APPENDIX H

POSSIBLE ARRANGEMENTS FOR PROCESSING SYSTEMS

This Appendix H provides detailed information including flow diagrams and mass balances for some of the more likely process configurations. The data in these mass balances are used as the basis for facility sizing and costs. Figures H-1 through H-7 illustrate possible arrangements for a MRF, mixed waste processing facility, and a leaf and yard facility using estimated tonnages for the year 2003 since this is the design year.

Figure H-1 shows a possible scenario where 20 percent of paper, plastic, metals, glass, white goods, and tires and 50 percent of leaf and yard waste would be source separated. Table H-1 is the corresponding material balance for Figure H-1. This percentage is based on the total amounts of these materials shown in Table 3-10. The quantity of materials recovered under this 20 percent scenario is the same as under the 30 percent net capture rate scenario shown in Table 5-1. Since only selected components were used for the 30 percent scenario as compared to broad categories of materials used of the 20 percent scenario, the overall quantities recovered are the same in both cases.

Figure H-2 is similar to Figure H-1, except that 80 percent of paper, plastic, metals, glass, white goods, and tires is source separated. Table H-2 is the corresponding material balance for Figure H-2. While a MRF is shown in Figures H-1 and H-2, it does not necessarily need to be at the same site as the mixed waste processing facility. It should also be recognized that any or all of the components available for market may not be salable at any price, in which case they will be disposed of in the landfill. This is true for compost as well as metals, glass, paper, and plastics.

Figure H-3 is a flow diagram for a composting facility illustrating various options of processing yard waste and MSW to produce high quality compost (Grade A) or standard compost (yard waste mixed with septage and/or MSW). Figure H-3 shows how a compost facility can produce a product to meet specific market needs as well as to effectively handle the incoming waste stream. The resulting grades of compost are as follows:

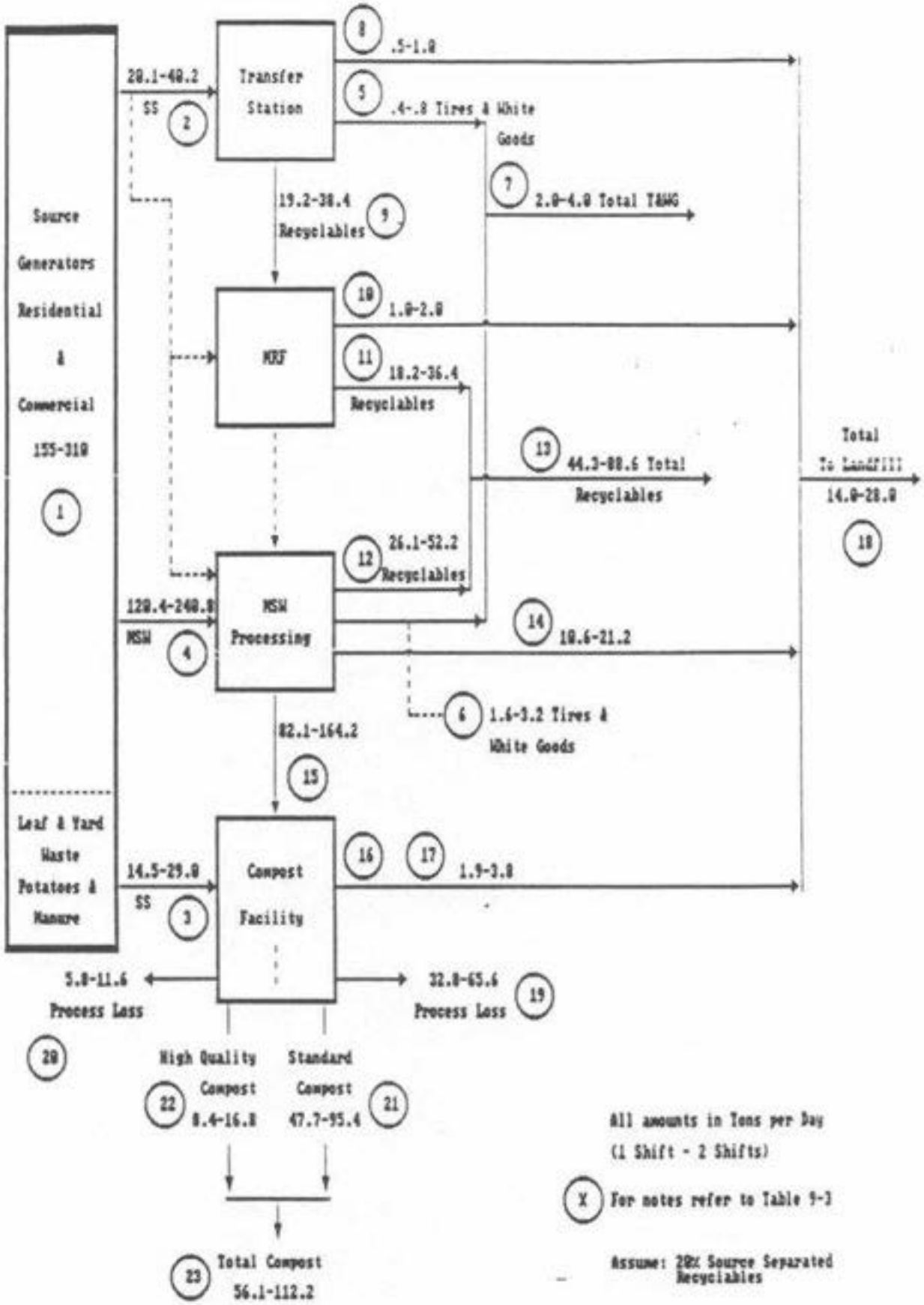

MRF/MSW/Composting (20% Source Separation)

Table H-1

Mass Balance for Figure H-1

Notes		1988		2003		2015	
		Number of Shifts per Day					
		1	2	1	2	1	2
1	Total MSW Generated	130.0	260.0	155.0	310.0	180.0	360.0
2	Source Sep. Recy. 20%	16.9	33.8	20.1	40.2	23.3	46.6
3	Source Sep. Yard Waste 50%	12.2	24.4	14.5	29.0	16.8	33.6
4	MSW to Processing	101.0	202.0	120.4	240.8	139.8	279.6
5	Transfer Station Tires & WG	0.3	0.6	0.4	0.8	0.5	1.0
6	MSW Process Tires & WG	1.3	2.6	1.6	3.2	1.9	3.8
7	Total Tires & White Goods	1.6	3.2	2.0	4.0	2.4	4.8
8	Trans. Sta. Rejects to L.F.	0.4	0.8	0.5	1.0	0.6	1.2
9	Trans. Sta. Recy. to MRF	16.1	32.2	19.2	38.4	22.3	44.6
10	MRF Rejects to Landfill	0.8	1.6	1.0	2.0	1.2	2.4
11	MRF Recyclables to Market	15.3	30.6	18.2	36.4	21.1	42.2
12	MSW Recyclables to Market	21.9	43.8	26.1	52.2	30.3	60.6
13	Total Recyclables to Market	37.2	74.4	44.3	88.6	51.4	102.8
14	MSW Rejects to Landfill	8.9	17.8	10.6	21.2	12.3	24.6
15	MSW Feedstock to Compost	68.9	137.8	82.1	164.2	95.3	190.6
16	STD. Compost Rejects to L.F.	1.3	2.6	1.6	3.2	1.9	3.8
17	Yard Waste Rejects to L.F.	0.2	0.4	0.3	0.6	0.3	0.6
18	Total to Landfill	11.6	23.2	14.0	28.0	16.3	32.6
19	Process Loss MSW	27.6	55.2	32.8	65.6	38.1	76.2
20	Process Loss Yard Waste	4.9	9.8	5.8	11.6	6.7	13.4
21	Standard Compost	40.0	80.0	47.7	95.4	55.3	110.6
22	High Quality Compost	7.1	14.2	8.4	16.8	9.8	19.6
23	Total Compost	47.1	94.2	56.1	112.2	65.1	130.2
TOTAL NOTES 7, 13, 18, 19, 20, 23		130.0	260.0	155.0	310.0	180.0	360.0

Notes: All amounts in tons per day per Table 3-11 and extended for anticipated growth to the years 2003 and 2015.

1) Includes all components listed in Table 3-11.
2) Source Separation of 20% of paper, plastic, metals, glass, oversize bulky (white goods), and tires delivered to transfer station. Some may go directly to MRF and/or MSW facility.
3) All leaf and yard waste, potatoes, and manure (50% source separated).
4) MSW after source separation delivered to processing facility.
7) Total (5+6) tires and white goods to markets.
9) Recyclables from transfer station to MRF.
11) Paper, plastics, metals, glass recyclables captured by MRF.
12) Remaining paper, plastics, metals, glass recyclables captured by MSW processing, per Table 9-1.
13) Total (11+12) recyclables (paper, plastic, metals, and glass) to market. MRF recyclables may be integrated with those recaptured in the MSW processing facility.
15) Processed MSW to compost facility.
18) Total (8+10+14+16+17) rejects to landfill.
19) 40% loss of incoming solids mass during composting of MSW.
20) 40% loss of incoming solids mass during composting of yard waste.
21) Standard compost (from MSW) to market or mix.
22) High quality compost (from yard waste) to market or mix.
23) Total (21+22) mixed compost.

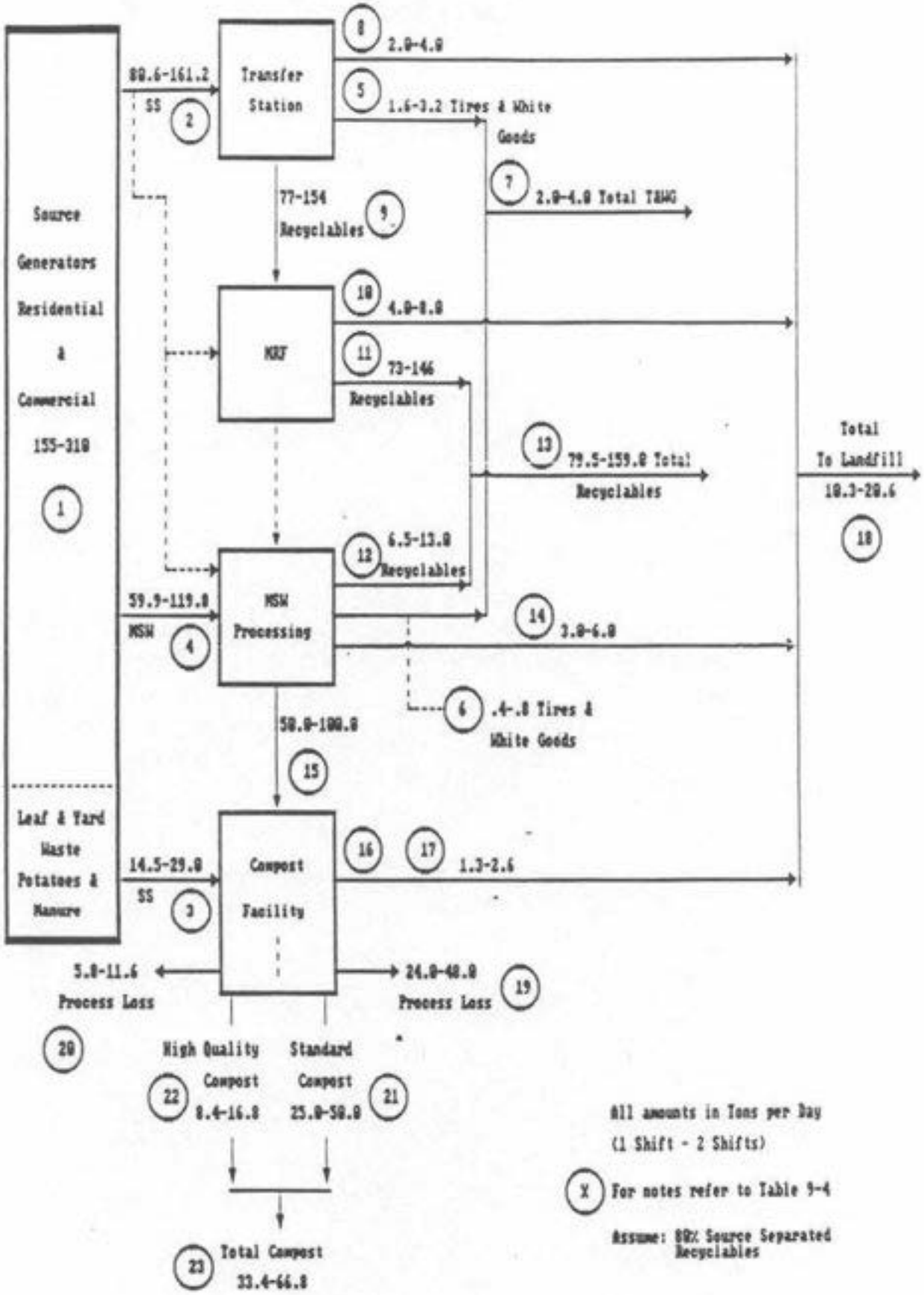

MRF/MSW/Composting (80% Source Separation)

Table H-2

Mass Balance for Figure H-2

Notes		1988		2003		2015	
		Number of Shifts per Day					
		1	2	1	2	1	2
1	Total MSW Generated	130.0	260.0	155.0	310.0	180.0	360.0
2	Source Sep. Recy. 80%	67.6	135.2	80.6	161.2	93.6	187.2
3	Source Sep. Yard Waste 50%	12.2	24.4	14.5	29.0	16.8	33.6
4	MSW to Processing	50.2	100.4	59.9	119.8	69.6	139.2
5	Transfer Station Tires & WG	1.4	2.8	1.6	3.2	1.9	3.8
6	MSW Process Tires & WG	0.3	0.6	0.4	0.8	0.5	1.0
7	Total Tires & White Goods	1.7	3.4	2.0	4.0	2.4	4.8
8	Trans. Sta. Rejects to L.F.	1.7	3.4	2.0	4.0	2.4	4.8
9	Trans. Sta. Recy. to MRF	64.5	129.0	77.0	154.0	89.3	178.6
10	MRF Rejects to Landfill	3.4	6.8	4.0	8.0	4.6	9.2
11	MRF Recyclables to Market	61.1	122.2	73.0	146.0	84.7	169.4
12	MSW Recyclables to Market	5.5	11.0	6.5	13.0	7.5	15.0
13	Total Recyclables to Market	66.6	133.2	79.5	159.0	92.2	184.4
14	MSW Rejects to Landfill	2.5	5.0	3.0	6.0	3.5	7.0
15	MSW Feedstock to Compost	41.9	83.8	50.0	100.0	58.1	116.2
16	STD. Compost Rejects to L.F.	0.8	1.6	1.0	2.0	1.2	2.4
17	Yard Waste Rejects to L.F.	0.2	0.4	0.3	0.6	0.3	0.6
18	Total to Landfill	8.6	17.2	10.3	20.6	12.0	24.0
19	Process Loss MSW	20.2	40.4	24.0	48.0	27.8	55.6
20	Process Loss Yard Waste	4.9	9.8	5.8	11.6	6.7	13.4
21	Standard Compost	21.0	42.0	25.0	50.0	29.1	58.2
22	High Quality Compost	7.1	14.2	8.4	16.8	9.8	19.6
23	Total Compost	28.0	56.0	33.4	66.8	38.9	77.8
TOTAL NOTES 7, 13, 18, 19, 20, 23		130.0	260.0	155.0	310.0	180.0	360.0

Notes: All amounts in tons per day per Table 3-11 and extended for anticipated growth to the years 2003 and 2015.

1) Includes all components listed in Table 3-11.
2) Source Separation of 80% of paper, plastic, metals, glass, oversize bulky (white goods), and tires delivered to transfer station. Some may go directly to MRF and/or MSW facility.
3) All leaf and yard waste, potatoes, and manure (50% source separated).
4) MSW after source separation delivered to processing facility.
7) Total (5+6) tires and white goods to markets.
9) Recyclables from transfer station to MRF.
11) Paper, plastics, metals, glass recyclables captured by MRF.
12) Remaining paper, plastics, metals, glass recyclables captured by MSW processing, per Table 9-2.
13) Total (11+12) recyclables (paper, plastic, metals, and glass) to market.
MRF recyclables may be integrated with those recaptured in the MSW processing facility.
15) Processed MSW to compost facility.
18) Total (8+10+14+16+17) rejects to landfill.
19) 40% loss of incoming solids mass during composting of MSW.
20) 40% loss of incoming solids mass during composting of yard waste.
21) Standard compost (from MSW) to market or mix.
22) High quality compost (from yard waste) to market or mix.
23) Total (21+22) mixed compost.

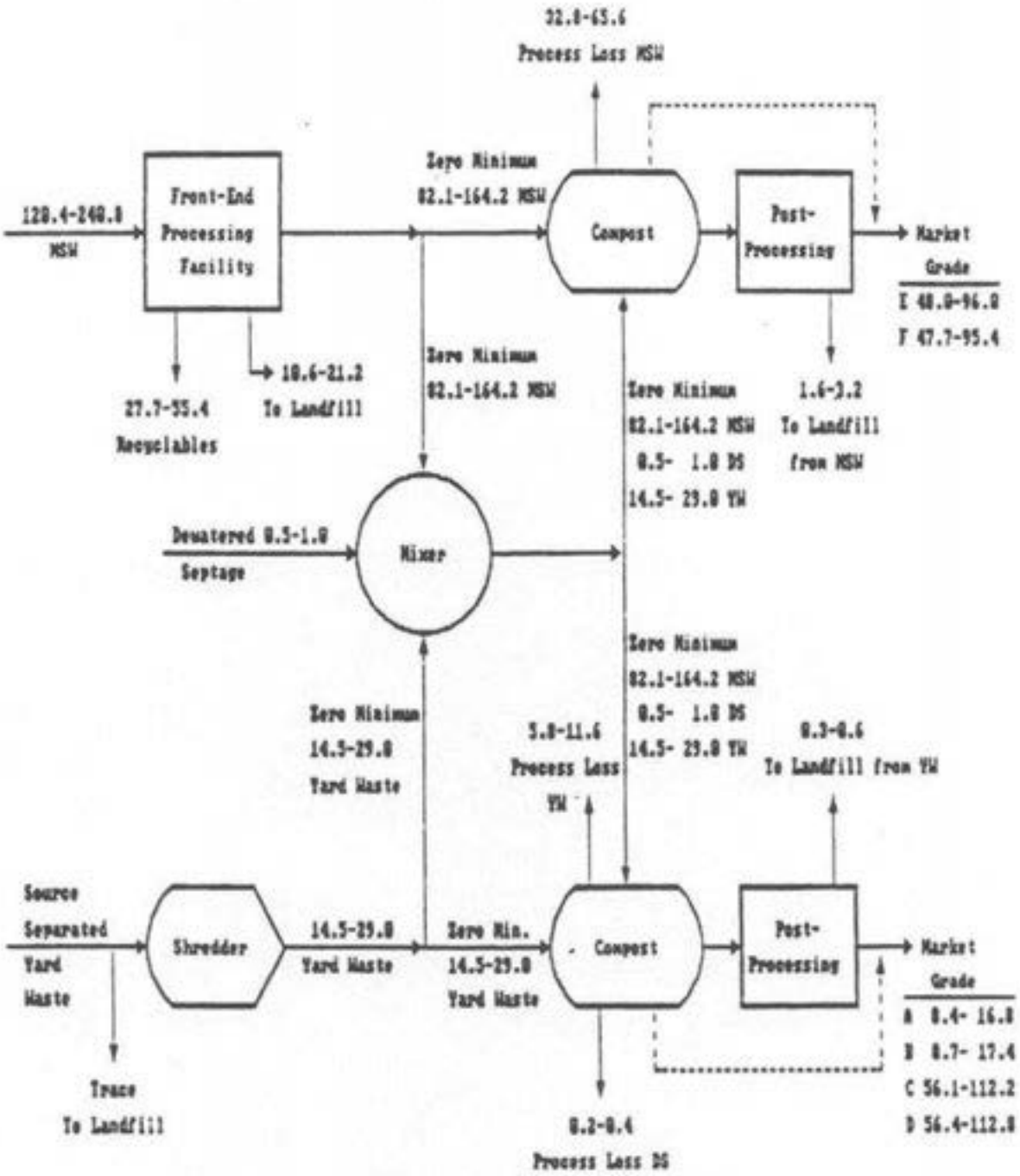

All amounts in Tons per Day
(1 shift - 2 shifts)

For grades see text

Composting Facility Schematic

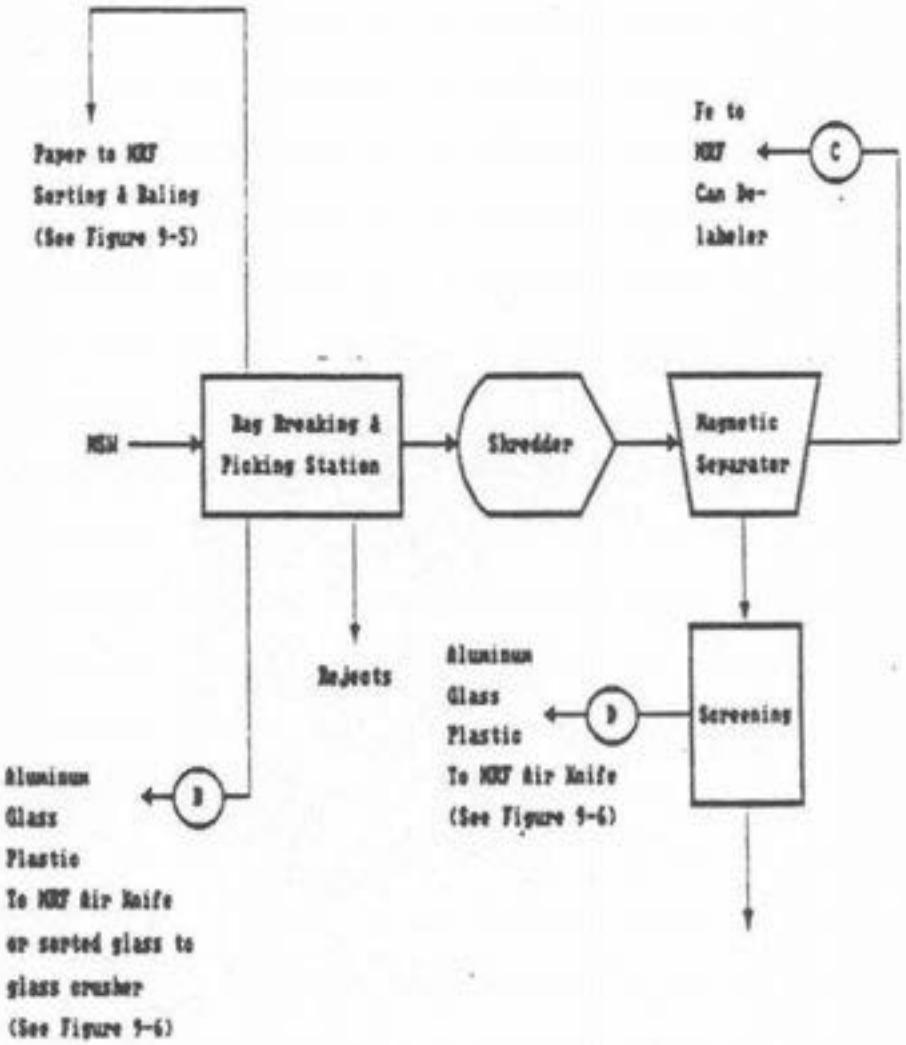

Integration of MSW Facility with MRF

Figure H-6

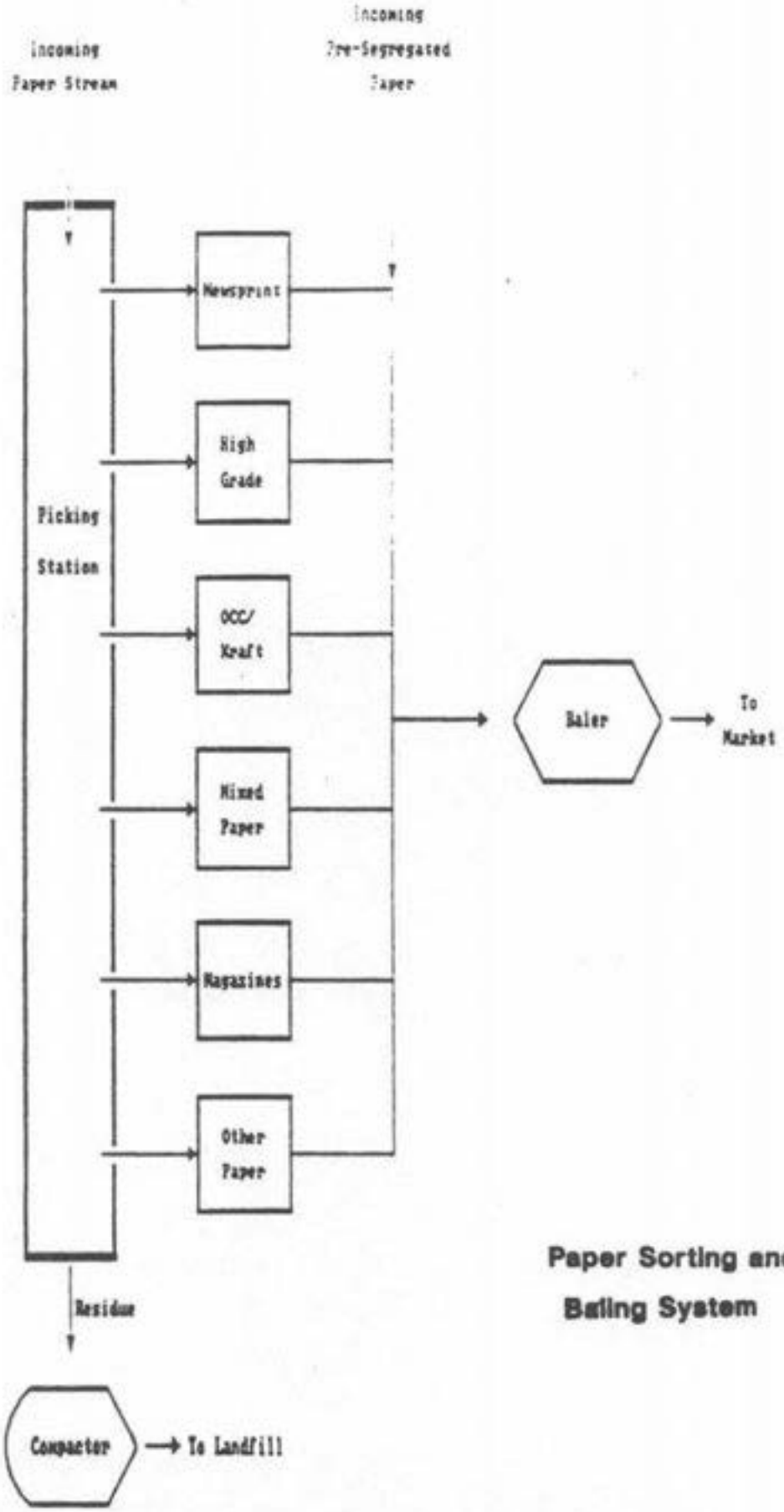

Paper Sorting and Baling System

Figure H-6

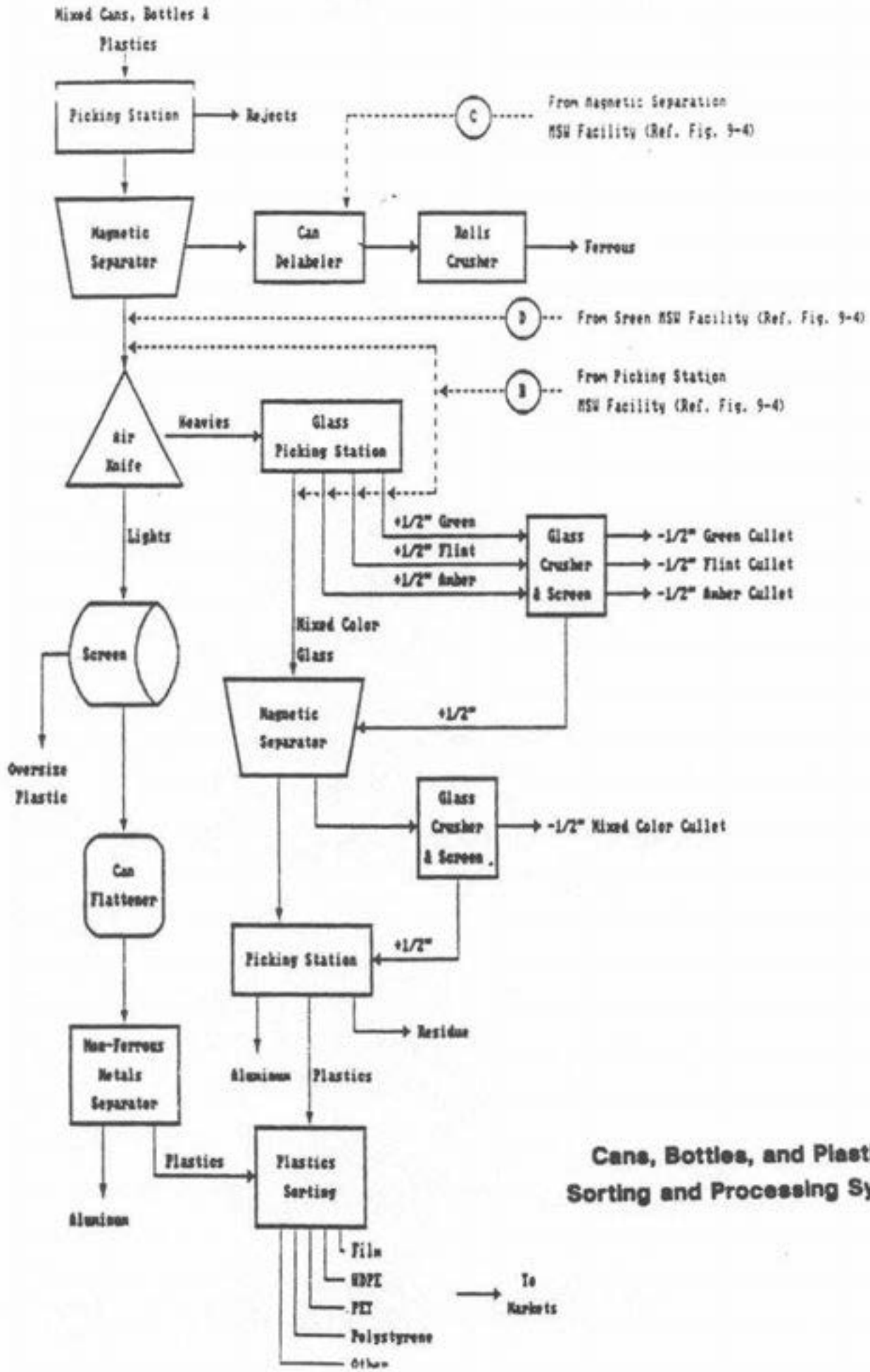

Cans, Bottles, and Plastics Sorting and Processing System

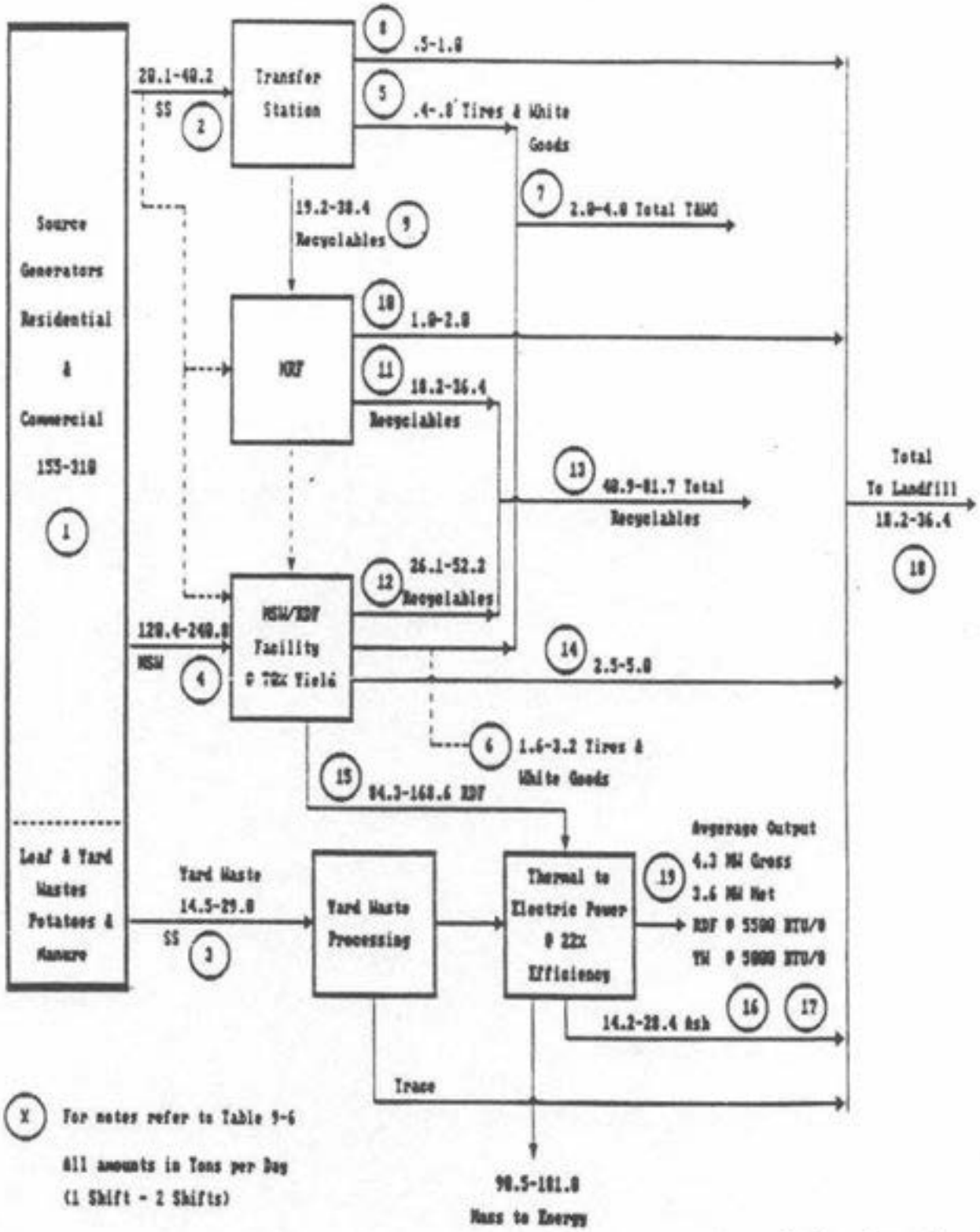

MRF/MSW/RDF System (20% Source Separation)

Table H-3

Mass Balance for Table H-7

Notes		2003 Number of Shifts per Day 1	2
1	Total MSW Generated	155.0	310.0
2	Source Sep. Recy. 20%	20.1	40.2
3	Source Sep. Yard Waste 50%	14.5	29.0
4	MSW to Processing	120.4	240.8
5	Transfer Station Tires & WG	0.4	0.8
6	MSW Process Tires & WG	1.6	3.2
7	Total Tires & White Goods	2.0	4.0
8	Trans. Sta. Rejects to L.F.	0.5	1.0
9	Trans. Sta. Recy. to MRF	19.2	38.4
10	MRF Rejects to Landfill	1.0	2.0
11	MRF Recyclables to Market	18.2	36.4
12	MSW Recyclables to Market	26.1	52.2
13	Total Recyclables to Market	44.3	88.6
14	MSW Rejects to Landfill	2.5	5.0
15	RDF	84.3	168.6
16	MSW Ash to Landfill	13.5	27.0
17	Yard Waste Ash to Landfill	0.7	1.4
18	Total to Landfill	18.2	36.4
--	Mass to Energy	90.5	181.0
TOTAL NOTES 7, 13, 18, & M to E		155.0	310.0
19	Average MW Output = 4.3 Gross, 3.6 Net		

Notes: All amounts in tons per day per Table 3-11 and extended for anticipated growth to the year 2003.

1) Includes all components listed in Table 3-11.
2) Source Separation of 20% of paper, plastic, metals, glass, oversize bulky (white goods), and tires delivered to transfer station. Some may go directly to MRF and/or MSW facility.
3) All leaf and yard waste, potatoes, and manure (50% source separated).
4) MSW after source separation delivered to processing facility.
7) Total (5+6) tires and white goods to markets.
9) Recyclables from transfer station to MRF.
11) Paper, plastics, metals, glass recyclables captured by MRF.
12) Recyclables captured by MSW processing.
13) Total (11+12) recyclables (paper, plastic, metals, and glass) to market. MRF recyclables may be integrated with those recaptured in the MSW processing facility.
15) 70% of incoming MSW converted to RDF.
16) MSW Ash = 16% of incoming MSW.
17) Yard Waste Ash = 5% of incoming yard waste.
18) Total (8+10+14+16+17) rejects to landfill.
19) Average Power Output:

$$\text{RDF} = \frac{126.5 \text{ TPD} \times 2000 \times 5500 \text{ BTU/LB} \times 0.293 \text{ W/BTU/HR} \times 0.22 \text{ Effy}}{1{,}000{,}000 \times 24 \text{ HR/Day}}$$

$$\text{Yard Waste} = \frac{21.8 \text{ TPD} \times 2000 \times 5000 \text{ BTU/LB} \times .293 \text{ W/BTU/HR} \times 0.22 \text{ Effy}}{1{,}000{,}000 \times 24 \text{ HR/Day}}$$

	Gross	In-Plant Use	Net
RDF	= 3.7 MW	0.6 MW	3.1 MW
Yard Waste	= 0.6 MW	0.1 MW	0.5 MW
TOTAL	= 4.3 MW	0.7 MW	3.6 MW

APPENDIX R-I

RESPONSES TO NYSDEC COMMENTS ON ORIGINAL SWAMP

TOWN OF SOUTHAMPTON
SOLID WASTE MANAGEMENT PROGRAM
RESPONSES TO NYSDEC COMMENTS ON ORIGINAL SWAMP

The Town of Southampton ("Town" or "Southampton") issued a Final Generic Environmental Impact Statement ("FGEIS") for its Solid Waste Management Plan ("SWAMP") on March 22, 1990. Nearly five months having elapsed with only limited comments received by the New York State Department of Environmental Conservation ("NYSDEC"), the Town prepared a Statement of Findings for the same (hereinafter collectively referred to as the "Original SWAMP"). It is noted that by letter dated August 15, 1990, NYSDEC provided the Town with comments on the Original SWAMP (the "Comments"), however, such comments were received well after the Town began preparing its Statement of Findings and concluding the State Environmental Quality Review Act ("SEQRA") process.

Prior to and throughout this time, the Town sought authority to continue landfilling at the North Sea Landfill Cell No. 3 (the "1990 Renewal Petition") beyond December 18, 1990. In connection therewith, the Town issued a Request for Proposals ("RFP") for the design, construction and operation of a solid waste recycling and municipal solid waste ("MSW") composting facility. As a result of this RFP process, the Town become concerned about its dependance on a solid waste management technology, i.e., MSW composting, absent any proven track record. The potential realities that the product generated by MSW composting would be contaminated and unmarketable, only to be landfilled in the Town's valuable Cell No. 3, was a risk too grave to take in light of the costs that would be incurred in implementing such a resource recovery system. Compounded by the number of MSW composting facility failures throughout the United States, the Town began to reevaluate other available solid waste management options.

Based on its review, the Town concluded that selective organics composting will produce a high quality compost product readily demanded in the market place. In this regard, the Town has committed itself to expanding its mandatory recycling ordinance to include soiled paper, food wastes and other organic matter, and make the entire ordinance applicable to commercial and industrial establishments as well as individual residences. In addition, waste reduction and source separation efforts will be intensified. Importantly, the Town proposes to construct an integrated facility at the North Sea Landfill, capable of accommodating all Town source-separated recyclables, composting operations for all organic matter generated within the Town, pre-processing of the remaining MSW stream for additionally extractable organics and/or recyclable materials, the composting of residual pre-processed MSW during the off-peak season i.e., fall and winter months), along with residual landfilling. During the off-peak season, two separate and distinct compost products will be generated.

In granting the Town's 1990 Renewal Petition, landfill authority was restricted beyond January 1, 1993 in an attempt to assure progress by Southampton with implementation of its "resource recovery" program. Having refined its Original SWAMP and selected a modified approach to pure MSW composting, with heightened emphasis on generating a product that will not be destined for landfilling, the Town submitted a petition dated

June 30, 1992 for the authority to continue landfilling at Cell No. 3, as currently permitted, beyond January 1, 1993 (hereinafter referred to as the "1992 Renewal Petition"). The 1992 Renewal Petition sets forth the aforenoted SWAMP refinements, the Town's selection of a "resource recovery" technology, as well as a proposal for implementing the same.

The refinements to the Original SWAMP have rendered some of DEC's comments no longer relevant. Although the scope of the Town's refined plan does not differ significantly from that presented in the Original SWAMP, the Town has determined that such refinements should be incorporated into a Revised SWAMP ("Revised SWAMP"). Further, since some of the comments request specific information that will be included in the Revised SWAMP, such information has not been duplicated herein. Where indicated below, reference should be made to the Revised SWAMP, which as stated both above and in the 1992 Renewal Petition, the Town intends to submit to DEC by August 15, 1992. The following are the Town's responses to the NYSDEC's comment on the Orginal SWAMP.

NYSDEC General Comment 1

The plan defers final technology selector for several reasons including the outcome of negotiations/discussions with the Town of Brookhaven on a regional approach to solid waste management.

Response to General Comment 1

The NYSDEC Comment 1 is a factual statement, and does not require a response.

NYSDEC General Comment 2

According to the plan, "the request for proposals (RFP) process will review all technology options in terms of costs, risks, benefits and environmental considerations, and will emphasize the desirability of conforming to the State technology hierarchy as a priority."

While recognizing the complexity and uncertainty of the planning process for Southampton, particularly with the regional approach to solid waste management, it is disturbing that a final technology selection is not made in the plan, but is deferred until the RFP process. It is suggested that the plan itself, not the RFP process, is the proper place in which to evaluate "all technology options in terms of costs, risks, benefits and environmental considerations."

Response to General Comment 2

The Original SWAMP deferred to the RFP process for selection of a principal solid waste management technology for several reasons. First, as set forth in the materials provided by the Town to DEC in connection with the 1990 Renewal Petition, the Town had considerable reservations about the lack of a proven MSW composting track record. Second, in light of the Town's inability to receive the requisite performance guarantees, the Town became concerned with its ability to justify the necessary capital expenditures on such a facility. Third, the NYSDEC was encouraging the Town to consider the then-proposed resource recovery facility in Brookhaven as an alternative to an in-Town composting facility.

Although no longer relevant, as the Brookhaven facility has since been shelved, this was a very real consideration at the time the Town completed its SWAMP and Statement of Findings. In accordance with Part 360-15.9(h), the Revised SWAMP describes an integrated system which will result in the management of each of the waste types to be treated, stored, or disposed within the planning unit. As a result of the initial RFP process, recent composting industry developments, contact with NYSDEC and other planning units, further evaluation of the needs of the people of Southampton, the Town has made a final technology selection. Principally, aggressive waste reduction efforts, increased mandatory source separation for both residences and commercial establishments, selective composting of organic materials throughout the year, pre-processing of the remaining MSW stream for organics and other recyclables, composting of such pre-processed MSW during the off-peak season, and residual landfilling are the backbone of the Town's revised plan. Although set forth in general terms herein, the program has been detailed in the Town's most recent Renewal Petition and will be described in significantly greater detail in the Revised SWAMP.

NYSDEC General Comment 3

As per 360-1.9(o) a listing of the actual comments provided to the Town for the Draft GEIS should be attached to the plan.

Response to General Comment 3

The actual comments on the Draft GEIS, along with the respective responses, shall be provided as an Appendix to the Revised SWAMP.

NYSDEC General Comment 4

Who or what level of government in the Town will be responsible for monitoring and evaluation and/or operation of ongoing activities once the program is implemented; [360-15.9(k)].

Response to General Comment 4

As stated in Section 2.1 of the Original SWAMP, the Town of Southampton, acting through the Town Board, is and will continue to be responsible for solid waste management, and facility operation. However, at its election, the Town Board may designate an individual to oversee and monitor day-to-day activities and implementation of the Town's program.

NYSDEC General Comment 5

Although an analysis of the costs of implementing the integrated system was provided in the SWMP, what are the actual financing mechanisms planned and/or currently in place to implement the program according to the schedule outlined; [360-15.9(m)].

Response to General Comment 5

Solid waste projects in the Town have routinely been financed via the issuance of General Obligation Bonds and grants provided by the NYSDEC. Future funding will likely be provided through the same mechanisms, along with the Town's tipping fee and general tax

fund used to pay debt service and operation and maintenance expenses. Bonds will be issued after NYSDEC's approval of the Revised SWAMP and bids on the recommended plan, i.e., design and/or construction of the proposed integrated facility are received, and actual capital costs are known.

NYSDEC General Comment 6

A listing of any local laws, ordinances, regulations, etc. needed or in place that will enable the Town to implement their program should be attached; [360-15.9(1)].

Response to General Comment 6

Appendix E of the Revised SWAMP shall include the Town Code Chapter 37 (Garbage and Waste Facilities), along with all subsequent amendments regarding mandatory recycling and source separation. Additionally, as indicated in the Renewal Petition, the Town is committed to expanding the scope of its mandatory recycling program to include food wastes, soiled paper and other organic matter. Further, via separate ordinances, Southampton's mandatory recycling laws will be made applicable to commercial and business entities throughout the Town.

NYSDEC General Comment 7

A step-by-step description or schedule of events complete with dates of action items to be implemented should be included; [360-15.9(i)]. In addition, the July 1, 1992 petition to the NYSDEC regarding continued landfilling at Cell No. 3 outlined a proposed implementation schedule.

Response to General Comment 7

Section 11.0 of the Original SWAMP, presented a schedule by which the Town intended to implement its proposed program. That schedule was later modified in light of the Town's efforts in 1990 to renew its authority to continue landfilling operations. Reference is made to the earlier Renewal Documents. In accordance with that modified schedule, Southampton issued an RFP for the design, construction and operation of a solid waste recycling and MSW composting facility. Among other things, the RFP process revealed significant difficulties associated with selecting a solid waste management alternative solely dependant upon unproven technology. Since issuance of the RFP and evaluation of the response generated in connection therewith, in conjunction with the number of MSW composting industry failures, NYSDEC's efforts for developing regional approaches to solid waste management, and severe budgetary constraints facing the Town, the Town Board determined that Southampton's Original SWAMP should be revised to reflect current knowledge and changed circumstances. The scope of such revisions are discussed throughout this response document, as well as the recent Renewal Petition. Although a step-by-step description and the time table for implementing the Revised SWAMP was included in the Renewal Petition, a more detailed implementation will be provided in the Revised SWAMP.

NYSDEC Comment A

Mixed Waste Processing Systems:

The waste-to-energy portion of this Plan is deficient in several areas. There is no discussion of biogasification, and only a minimal discussion of rotary combustors and modular facilities, despite the fact that in the size range discussed for Southampton, modular incineration may be competitive. The discussion of advantages/disadvantages of incineration in general is weak, and the relative merits of the various technologies is also limited. The Plan provides a limited discussion of ash disposal, but this discussion does not include information on the quantity, quality and disposal requirements/options for incinerator ash. The Plan does not include a discussion of the heat value of the waste, both current, as well as changes which may occur due to changes in waste stream composition (as may be expected from recycling).

Response to Comment A

As described in Section 9.0 of the Original SWAMP, many factors were considered in selecting a technology most appropriate for the management of Southampton's solid waste. There were several reasons for not selecting a waste-to-energy system, including potential environmental impacts, project economics, highly fluctual seasonal waste quantities, and concern regarding public acceptance of waste-to-energy. In addition, the difficulties with siting and permitting an incineration facility within the Town, especially given the extended timetable necessary to implement such a project, could not be ignored. As a result, the distinction between rotary combustors, or between modular or field-erected facilities, is relatively minor. Further, in light of the Town's elimination of this alternative, an in depth discussion of: (i) the quality, quantity and disposal requirements for incinerator ash; or (ii) higher heating value of the waste, regardless of changes in waste stream composition, is not warranted.

NYSDEC Comment A.1

The capital cost for a waste-to-energy facility is reasonable. However, the capital cost for a compost facility is noted (in the text, page 9-14) to be $15-18 million or "...somewhat higher, depending on...odor control..." Why, then is $15.8 million used in Table 9-2?

Response to Comment A.1

The capital cost estimate of the mixed MSW composting facility of $15 - $18 million, as outlined in the Initial SWAMP, is no longer significant since the Revised SWAMP will include cost estimates for the modified program, along with updated costs for other types of facilities for comparison purposes.

NYSDEC General Comment A.2

Why is a ten percent interest rate used? Waste-to-energy is a reasonably proven process, and would be expected to receive a more favorable rate in the bond market.

Response to Comment A.2

An interest rate of 10 percent was used since that was a reasonable rate at the time the Original SWAMP was prepared. The Town intends to finance the facilities using General Obligation Bonds. Unlike Revenue Bonds, interest rates of General Obligation Bonds are largely based on the full faith and credit of the Town of Southampton and not the technology selected. The Revised SWAMP analyses will reflect an interest rate of approximately 7 percent.

NYSDEC Comment A.3

The text (page 9-15) indicates that a zero value has been assigned to compost for revenue. Table 9-2 assigns a revenue of $370,000 for the first year.

Response to Comment A.3

The Revised SWAMP will include refined revenues for high grade and low grade compost materials. These revenues will be included in the overall system cost analysis to be included in the Revised SWAMP.

NYSDEC Comment A.4

The residual disposal cost estimate ignores the fact that residue from a combustion facility is of much greater density than compost. Hence, since a ton of combustion residue will take only a fraction of the landfill value of an equal weight of compost residue, the disposal cost should be adjusted accordingly.

Response to Comment A.4

While it may be true that incinerator ash is more dense than compost and thus may impact on the life of a landfill over time, waste density is generally not a factor in the actual cost of disposal. In fact, many Long Island communities are actually paying more for the disposal of ash residue than for MSW compost or other compost products. Residual disposal costs are based more on the weight of a particular waste than its volume. In any event, since the Town has eliminated incineration and has chosen a program consisting of aggressive waste reduction efforts, intensive source separation recycling, selective organic composting with MSW composting during the off-peak season along with residual waste landfill, any cost variance attributable to incinerator ash is no longer relevant.

NYSDEC Comment A.5

The Summary of Table 9-2 presented on pages 9-15 and 9-16, does not agree with the Table.

Response to Comment A.5

Although not affecting any of the overall conclusions, the inconsistency is noted and will be corrected in the Revised SWAMP.

NYSDEC Comment A.6

The analysis for waste-to-energy is based on 500 kwh. While this is reasonable, as noted previously, no discussions of the heat value of the waste is presented.

Response to Comment A.6

If the Town were to have selected incinerator as its principal waste disposal technology, an engineering analysis of the Btu and Kwh values of the solid waste before and after recyclables recovery, for the proposed life of the project, would be required. As mentioned in the above response, the Town does not propose to construct an incinerator, and neither the Original SWAMP nor the Revised SWAMP constitute permit applications for the same. As a result, a discussion of the Btu value of the waste is not necessary at this point in the planning process. The information regarding Kwh was provided in the Original SWAMP because it was readily available.

NYSDEC Comment A.7

The economic analysis presents first year tipping fees only, and does not present a life cycle analysis.

Response to Comment A.7

The Revised SWAMP will include cost analyses over the planning period, which is approximately twenty (20) years -- equivalent to the life-cycle of the proposed integrated facility.

NYSDEC Comment A.8

Table 7-3: The Class II compost heavy metal criteria as stated are incorrect. The maximum concentration for cadmium is 25 ppm, lead is 1000 ppm and total PCBs is 10 ppm.

Response to Comment A.8

We acknowledge the typographical error in Table 7-3. Table 7-3 will be revised accordingly in the Revised SWAMP.

NYSDEC Comment B.1

Page 10-4: paragraph 360-1.14(c)(2) does not prohibit development of a solid waste management facility (SWMF) on a floodplain. It does allow a SWMF on a floodplain if the provisions in this paragraph are satisfied.

Response to Comment B.1

Although Part 360-1.14(c)(2) does not prohibit development of a solid waste management facility on a floodplain, it does require that certain provisions be made to prevent the encroachment of flood waters upon those facilities. These further requirements would result in significant additional costs to the Town in its facility development. The exclusion of floodplains enabled the Town to identify sites that did not have such inherent additional

construction costs. Moreover, construction on floodplains raises additional environmental concerns, such as interference with natural drainage patterns, which the Town likewise sought to avoid.

NYSDEC Comment B.2

Page 10-4: paragraph 360-1.14(c)(1) does not apply to composting facilities. Composting facilities can be sited on agricultural soils.

Response to Comment B.2

While Part 360-1.14(c)(1) does not apply to composting facilities as noted in the comment, the integrated facility selected by the Town includes source separation recycling as well as composting and thus would be prohibited on agricultural lands. In addition, the siting process was designed to maintain existing and future land use patterns to the maximum extent possible. In keeping with this directive, agricultural soils located within the Agricultural Overlay District were excluded from consideration.

NYSDEC Comment C

As a general comment, which is the basic concept and premise upon which the recyclables recovery program is to based is, the Town must seek to maximize, to the extent economically and technically practicable, waste reduction and recycling of all components of the waste stream within its service area. That maximization is the goal the Town should target and strive to attain and not the 40 to 42 percent recycling and eight to ten percent waste reduction by 1997 Statewide goals, used by the State as planning objectives. This maximization concept must be applied to the entire waste reduction and recycling program and reflected in this submittal.

Response to Comment C

As noted in NYSDEC's comment, municipalities should strive to maximize -- to the extent economically and technically practical -- waste reduction and recycling of all components of the waste stream. Although the New York State Legislature set planning objectives for municipalities in terms of percent reduction and recycling, satisfaction of such goals should not result in municipal complacency. In line with this comment, refinements to the Town's Original SWAMP will result in significantly greater reduction and recycling percentages. As related on Table 3R-7 to be included in the Revised SWAMP, a copy of which is attached hereto, such percentages will far exceed statewide goals in 1997. In fact, the 40% recycling goals will be reached by 1993, four years before statewide planning objectives. Further, by 2010, conservative estimates indicate that the Town will be recycling approximately 75 percent of its waste stream. In addition to already having met the New York State objectives pertaining to waste reduction.

NYSDEC Comment C.1

The analysis of the composition of the solid waste presently generated within the Town is incomplete. The information provided is sufficient for residential waste, construction and demolition (C&D) debris and sewage sludge; however, more detail and/or analysis is required in the general categories of institutional, commercial, and non-hazardous industrial wastes. In

addition, the submittal should be revised to provide the projections of future waste generation on a year-by-year basis. [3601.9-(f)(1)(i)]

Response to Comment C.1

The waste stream components outlined in the Original SWAMP reflect the scalehouse records database categories, coupled with published industry averages. The waste stream components incorporate the institutional, commercial, and non-hazardous industrial wastes. The Revised SWAMP will include all wastes -- by specific categories -- and will provide the year-by-year projections requested in the DEC comment.

Attached to these comments are Tables 3R-3, 3R-4, and 3R-5, which address the expanded materials and year-by-year projections for each component of the waste stream and will be included in the Revised SWAMP.

NYSDEC Comment C.2.a

The identification and evaluation of the types of solid waste contained in the overall waste stream that could be reused, recovered as recyclables or composted (whether or not feasible at this time) is incomplete as presented. The following are specific questions and concerns: [360-1.9(f)(1)(ii)]

The evaluations of the types of solid waste should be expanded to include all materials identified as potentially recyclable. The current presentation does not address all identified materials in detail.

Response to Comment C.2.a

The Original SWAMP identifies approximately 30 categories of materials in the Town's waste stream, most of which are reusable, recyclable, or compostable (see Original SWAMP, Table 3-13). The Revised SWAMP will provide further details regarding these potentially recyclable materials in the Town's waste stream.

NYSDEC Comment C.2.a(i)

The plastics discussion is not accurate at this time as a greater degree of plastics recycling is occurring than is indicated within this discussion. The discussion should include evaluations of at a minimum PET, HDPE, LDPE, PS, PVC and mixed plastics recycling.

Response to Comment C.2.a(i)

The Revised SWAMP will include additional information regarding current plastics recycling. Table 3R-7 (attached) provides information regarding the anticipated level of plastics recycling. Table 3R-7 will be included in the Revised SWAMP.

NYSDEC Comment C.2.a(ii)

The paper discussion should be expanded to include an evaluation of the "other paper" category. Recycling of this material is feasible in many instances either as a direct resource or as a potential compost feedstock.

Response to Comment C.2.a.(ii)

The Original SWAMP identified six types of paper for recycling, including, "other paper". The Initial SWAMP assumed that "other paper" would be composted. The Revised SWAMP will address the recycling of all paper deemed to be feasible for recycling. The balance of the paper that cannot be recycled, which is assumed to be largely contaminated paper, will likely be composted within the enclosed source separated organics system, as will be described in the Revised SWAMP.

NYSDEC Comment C.2.a(iii)

The evaluations should include materials that are potentially compostable, either on a category specific basis (e.g., yard waste, food waste) or on a mixed waste composting basis.

Response to Comment C.2.a(iii)

An evaluation of the composition of the Town's waste stream was included in the Original SWAMP. This evaluation identified 30 waste types including a number of organic materials many of which are potentially recyclable (see Original SWAMP, Table 3-13). The Revised SWAMP will further evaluate the potential for recycling material in the Town's waste stream, as well as the composition and projected quantities of potentially compostable materials such as leaf and yard waste, contaminated paper, food wastes, and other organic matter, including various types of agricultural wastes (see Tables 3R-4 and 3R-5 attached). Evaluation of these materials has been completed on category specific bases and will be included in the Revised SWAMP.

NYSDEC Comment C.2.b(i)

Clarifications or additional detail should be provided on Table 3-13.

In what component categories are the following three components? (white goods, household hazardous waste and batteries)

Response to Comment C.2.b(i)

Although white goods, batteries and household hazardous waste were not specifically identified on Table 3-13, they were discussed elsewhere in the Original SWAMP (see Original SWAMP, Sections 3.3.3, 3.3.3.1, and 3.3.7). The Revised SWAMP compositions for "white goods," as well as for "other inorganics," which include used oil, batteries, paint, and other household hazardous wastes (see Tables 3R-3 and 3R-4 attached).

NYSDEC Comment C.2(b)(ii)

Note 2 states "Other paper is not recyclable." This material is compostable and should be included in the potentially recyclable materials. All projections should reflect this concept.

Response to Comment C.2(b)(ii)

Reference is made to the response noted above to Comment C.2.a(ii). The Revised SWAMP will incorporate contaminated paper in its projections of potentially recyclable materials. Table 3R-7 (attached) includes these quantities in the recycling rates.

NYSDEC Comment C.2(c)

All estimates and projections of waste reduction and recycling should be for all potential recyclables, not just selected recyclables as indicated in Table 3-17 and 3-18. Compostable materials should be included as potentially recyclable materials. An evaluation of C&D and any commercial and non-hazardous industrial waste should be provided.

Response to Comment C.2(c)

The Original SWAMP, Tables 3-17 and 3-18, reflects potential recyclability through source separation efforts, as noted in NYSDEC's comment. Composting of mixed waste, as a mixed waste processing technology was addressed separately in the Original SWAMP (see discussion in Section 7.0). With refinements to and in light of the Town's plan, the Revised SWAMP will provide estimates and projections of waste reduction and recycling -- including all compostable materials. Further, to the extent feasible, projections of waste reduction and recycling will include construction and demolition ("C&D") debris. Table 3R-7 (attached) provides the expanded list of both municipally, residentially and commercially generated waste materials the Town has targeted for potential recycling and composting.

NYSDEC Comment C.2(d)

General capture rate estimates should not be used for projections. Instead, each component should be evaluated and recyclable specific capture rates developed, with the maximization concept noted in the general comment, at the heart of the projection. These individual capture rates are expected to increase over time reflecting increases in participation rates and separation efficiencies. This concept will be the basis for projections of waste reduction and recycling percentages as it is incorporated into the overall plan.

Response to Comment C.2(d)

The Revised SWAMP will include a material-by-material, year-by-year projection of the waste stream, including varying recovery rates. Table 3R-7 (attached) reflects the anticipated recovery rates.

NYSDEC Comment C.2.e

Mixed waste composting or MSW composting should fully evaluate and clearly reflect any recoveries of material through front-end processing and/or back-end processing as well as the residues projected to remain from the composting process.

Response to Comment C.2.e

The integrated recycling and composting program, which is described in the Renewal Petition, will be further detailed in the Revised SWAMP. Importantly, this program has a greater emphasis on source separation of recyclable materials. This will enable greater recovery of materials that have not been "contaminated" by the mixed waste stream. Also, leaf and yard waste, soiled papers, food wastes and other organics will be source separated. The rest of the waste stream will be subject to pre-processing for both mechanical and manual extraction of organic and recyclable materials. The details of such pre-processing will be provided in the Revised SWAMP. Since the material to be composted will be largely source separated organics, it is not envisioned that post-processing of the resulting compost will recover noticeable quantities of recyclables. During the peak season, subsequent to such processing, all residual material will be directed for landfill disposal. In contrast, during the off-peak season, utilizing excess capacity at the proposed facility, the Town will compost a portion of such residual municipal solid waste.

NYSDEC Comment C.3

The description of various strategies to achieve a reduction in the amount of solid waste destined for disposal should include a detailed discussion of potential industrial and commercial recyclables recovery efforts. [360-1.9(f)(1)(iii)]

Response to Comment C.3

Section 6.5 of the Original SWAMP discussed commercial and industrial waste recycling strategies for the future. This section presented two options for instituting recycling in the commercial sector: (1) the commercial sector developing its own recycling initiatives; or (2) for the Town becoming directly involved with the collection, processing and marketing of commercial recyclables. The Revised SWAMP will describe in detail the specific recycling strategies the Town plans on instituting for reducing commercial and industrial waste. These initiatives will include, for example, the imposition of mandatory source separation requirements on the commercial and industrial sectors, along with expansion of the list of recyclable materials.

NYSDEC Comment 4

An evaluation of existing municipal efforts to recover recyclables is presented, however, and evaluation of existing commercial, industrial and private efforts to recover recyclables is not provided with the exception of C&D. [360-1.9(f)(2)(i)]

Response to Comment C.4

Section 3.2.4 of the Original SWAMP presented an evaluation of existing commercial, industrial and private recycling efforts. As stated on page 3-10, quantities were not estimated due to the inconsistent nature of these recycling activities. Commercial carters have only recently been providing the Town with weight receipts for materials recycled by commercial and industrial establishments. Updated information on the existing commercial, industrial and private recycling efforts will be provided in the Revised SWAMP. In general, however, as the existing commercial and industrial recycling efforts are apparently

inadequate, the Town's integrated program will impose mandatory source separation on commercial and industrial establishments.

NYSDEC Comment C.5

An assessment of the impact of the proposed recyclables recovery effort on the existing municipal recyclables recovery program was provided, however, an assessment of the impact of the proposed effort on all existing recyclables recovery programs must be provided. This assessment should include existing commercial, industrial and private programs. [360-1.9(f)(2)(ii)]

Response to Comment C.5

The Town's recycling program including the development of its integrated facility, is intended to enhance the existing commercial recyclables recovery program by providing an outlet for marketing recyclables. In addition, recyclables that will be inadvertently mixed with the general waste stream will be extracted at the integrated facility. The Town is also providing technical assistance to commercial establishments for recycling via communication through waste haulers. The impacts of the proposed initiatives on all existing material recovery programs will be discussed further in the Revised SWAMP.

NYSDEC Comment C.6

The Department of Economic Development (DED) Office of Recycling Market Development should be contacted in regards to potential markets for recyclables. That Office should be listed as a resource in review of available information used to identify potential markets for recyclables. [360-1.9(f)(3)(i)]

NYSDEC Comment C.7

The market survey provided is a limited effort restricted only to Long Island markets. The market analysis should not be restricted to only Long Island. In addition, information such as quantity and quality requirements of the recyclables and contractual and transportation requirements should be included. This survey should be enhanced to provide this information if available [360-1.9(f)(3)(ii)]

NYSDEC Comment C.8

The identification of the types of processing necessary for separation and upgrading of recovered recyclables should be more closely related to assuring market acceptance. [360-1.9(f)(3)(iii)]

NYSDEC Comment C.9

The identification of market services available for assistance in preparation and transportation of recovered recyclables was not provided. [360-1.9(f)(3)(iv)]

Response to Comments C.6 through C.9

The market information provided in Section 6.8.1, Existing Market Survey, of the Original SWAMP has been modified. Such market survey information is attached hereto and will be provided in Section 6.OR of the Revised SWAMP. Specifically, the following modifications will be incorporated into Section 6.0R.

- The New York State Department of Economic Development, Office of Recycling Market Development (NYSDED, ORMD) has been contacted regarding potential markets for recyclables. An updated list of potential markets has been requested and will be included in the Revised SWAMP. Additionally, the NYSDED will be listed as a resource for identifying potential markets for recyclables in the Revised SWAMP.

- An expanded and enhanced market survey will be presented in Section 6.0R of the Revised SWAMP. The scope of the revised survey will not be restricted to Long Island only, but will be expanded to cover the greater New York metropolitan region. Where available, enhanced information regarding quantity and quality requirements for recyclables and contractual and transportation requirements will likewise be included.

- Section 6.0R of the Revised SWAMP will identify (where such information is available) the types of processing necessary for separation and upgrading of recovered recyclables in order to assure market acceptance. The Town will continue to market unprocessed, source separated recyclables because markets for these materials exist and the Town has strong historic ties to those markets.

- The types of market services available for assistance in the preparation and transportation of recovered recyclables will be provided in Section 6.0R of the Revised SWAMP.

NYSDEC Comment C.10

An identification of alternate source separation/recyclables recovery programs considered, the proposed program, and reasons for selection of the proposed program must be provided as part of this plan. An identification of alternate source separation programs was not provided. The identification should include an economic analysis of the different methods of source separation and collection. The program selected is briefly outlined, however, more specific information is required on the collection aspects. An economic comparison of the options available for processing the recyclables should be provided (i.e.: Southampton MRF, East End MRF and Brookhaven MRF). After or along with the description of the proposed program, the reasons for selecting that proposed program or alternative must be provided. [360-1.9(f)(4)]

Response to Comment C.10

Section 6.7.1 of the Original SWAMP evaluates alternative curbside/backyard recyclables collection strategies comparing separate collection with a range of commingle collection strategies. Based on this evaluation, commingle was considered advantageous because it improved collection efficiency while stimulating greater participation. Private haulers will

continue to collect materials, but will be subject to mandatory source separation requirements as described herein and set forth in greater detail in the Revised SWAMP.

The Revised SWAMP will also provide an economic comparison of the options available for handling recovered and recyclable materials. Section 9.0R of the Revised SWAMP will present five scenarios of solid waste management programs evaluated by the Town, including different in-Town and out-of-Town variations of source separation, materials recovery processing, organics composting, and remaining MSW processing. These evaluations will be based on 20-year life cycle analyses incorporating debt service fees, operating costs, material revenues, and landfill disposal costs. This analysis provides the basis for the Town's selection of integrated recycling and selective organic and MSW composting program, which will be detailed in the Revised SWAMP.

NYSDEC Comment C.11

A detailed description of the procedures for implementation of the selected program was not provided for all aspects of the program. Details of the implementation of the overall program and the specific components as to how and when it will affect the residents and businesses should be provided. This should also include specifics on what materials, when, and how residents are serviced for each material or general component. Specific deficiencies in addition to the lack of the overall plan and scope are:

a. Details of the collection arrangements for all recyclable components generated within the Town;

b. The processing and storage procedures, from initial separation by the generator to the final processing and transportation (ie: residential source separation to transportation to the MRF and processing at the MRF) should be outlined for each recyclable;

c. Current market arrangements along with back-up markets should be identified;

d. The staffing available for the overall program should be identified; and

e. The funding sources for the overall recyclable recovery program should be identified. Funding for the MSW composting aspect was provided, however, the entire program should be evaluated in regard to funding. [360-1.9(f)(5)(1)]

Response to Comment C.11

The Revised SWAMP will provide detailed descriptions of the major components of the Town's solid waste management program, including each of the aspects listed in the comment. These major components will include a vigorous mandatory source separation program for residences and commercial establishments, selective composting of the organic fraction of the Town's waste stream both separated at its source and derived from pre-processing of mixed MSW, composting of such pre-processed MSW during the off-peak season (thereby generating a separate and distinct compost product); the transfer of recovered recyclables for out-of-town processing, and residuals landfilling. The level of processing required for each type of material, funding, staffing, and specific marketing agreements will depend to a great extent on the vendor selected, and the specific agreement negotiated. This information, however, will be provided in greater detail in the Revised SWAMP.

NYSDEC Comment C.12

A schedule with specific dates for implementation of the selected program must be provided which includes dates to attain specified, progressively increasing percentages of the waste stream that will be recovered as recyclables. This schedule should clearly outline, in detail, the events and activities which will result in maximization of waste reduction and recycling. The schedule and associated narrative is to include an evaluation of all residential, commercial, institutional, non-hazardous industrial, C&D and sewage and water treatment plan sludge (if applicable). The schedule provided is vague and weak after 1991. The schedule of events should be integrally coordinated with the projected percentages of the waste stream which will be recovered as recyclables (e.g. facility construction and operation, additional recyclables added to program, duration of program and the associated affect on participation rates/separation efficiencies). The total percentages projected should be based on the total waste stream, that includes estimates and evaluation of all residential waste components including MSW composting and yard waste composting C&D, commercial, institutional and non-hazardous industrial waste. Special emphasis should be placed on institutional and non-hazardous industrial waste. Special emphasis should be placed on instituting a household hazardous waste program and a battery collection program due to the MSW composting aspect of the proposed program.

Vague statement in regards to program plans such as "the Town will probably initiate separate windrow and or static pile composting of leaves and yard waste at the landfill and consider this in the future at a transfer station at the west end of the Town," on page 9-8, should be revised to reflect a more direct and specific plan. This concept should be provided throughout the schedule. In regards to the Towns C&D management plan, it is stated on page 9-8, "...the Town should continue to leave C&D recycling activities to the private sector unless private enterprise fails to maintain a continuing C&D recycling posture." What is the Town planning if the private enterprise fails to maintain the C&D recycling posture? [360-1.9(f)(5)(iii)]

Response to Comment C.12

The Renewal Petition outlined a proposed implementation schedule -- major milestone by major milestone -- specific for the Town's revised solid waste management program. Specific initiatives to be implemented such as those described in the Response to Comment C.11 will be discussed in further detail in Section 11.0R of the Revised SWAMP. These program specific activities will provide the necessary information to expand on the Renewal Petition's general implementation schedule. Reference should also be made to the Response to General Comment 7 setforth above.

NYSDEC Comment C.13

The actions proposed to be taken to maximize, to the extent practicable, the development and enhancement of economic markets for recyclables recovered within the service area under local laws or ordinances adopted or to be adopted under Section 120-aa of the General Municipal Law should be outlined. [360-1.9(f)(5)(iii)]

Response to Comment C.13

Currently, the Town's recyclables are delivered to and/or picked up by a number of different transfer entities, as described in the Renewal Petition (see Renewal Petition at p. 5). Such entities were selected after exhaustive research with respect to other available

options. The Town intends to update such research on an annual basis to insure maximum enhancement. Further, as markets have developed, the Town has added additional components of the waste stream to its recycling program (i.e., junk mail). Also, in accordance with Part 360-1.9(f)(5)(iii), the Town proposes to do the following to maximize the enhancement of economic markets for recyclables:

- continue acting as recyclables marketing cooperative to market recyclables collected in all of the villages and unincorporated areas within Southampton;
- seek processing arrangements with other towns in the region; and
- pursue implementation and enforcement of a mandatory source separation law to increase recyclables supplies.

NYSDEC Comment C.14

An identification of the specific public relations and education programs to be undertaken for implementation of the recyclables recovery program must be provided. Examples of program components which can be use in a public relations and education programs was provided; however, specific programs, and the use of these identified components was not provided. A schedule for public relations and education activities should be provided which consistent with, and complimentary to, the overall program schedule noted in number 12, above. [360-1.9(f)(5)(iv)]

Response to Comment C.14

Section 6.6 of the Original SWAMP outlined a public education program proposed by the Town as part of implementing the initial plan. While this discussion provided a general review of initiatives that would be undertaken, Table 11-3 of the Original SWAMP outlined a specific schedule of activities, and how such activities would contribute to projected recycling goals. However, since the Town has refined its solid waste management program, a public education program including educational initiatives additional to that described in the Original SWAMP will be included in the Town's Revised SWAMP. Reference should be made to Section 6.0R and 11.0R of the Revised SWAMP.

NYSDEC Comment C.15

An identification of the laws, rules, regulations or ordinances which could cause potential constraints to the recyclables recovery program was not provided. If no such laws, rules, regulations or ordinances exist, that fact should be clearly stated. [360-1.9(f)(6)(i)]

Response to Comment C.15

Existing ordinances pertain to source separation of certain recyclable materials and disposal of materials at the Town's disposal facilities. In accordance with Part 360-1.9(f)(6)(i), no existing laws, rules or ordinances are expected to constrain the Town's recyclables recovery program and/or implementation of the Revised SWAMP.

NYSDEC Comment C.16

Any local laws or ordinances that must be adopted or amended to facilitate the implementation of the recyclables recovery program and the enhancement of economic markets for recyclables recovered within the Town should be described. In addition, a schedule of the adoption and implementation of such laws or ordinances must be provided which is consistent with, and complementary to, the overall program schedule noted in number 12 above. [360-1.9(f)(6)(ii)]

Response to Comment C.16

Table 11-3 of the Original SWAMP presented a summary of implementation activities including proposed modifications to existing legislation. Due to the refinements to the Original SWAMP, outlined both herein and in the Renewal Petition, also to be detailed in Southampton's Revised SWAMP, the implementation schedule has required modification accordingly. Mandatory source separation laws will be further amended to expand the list of materials subject to such source separation (i.e., soiled paper, food wastes and other organic matter). Further amendments will also subject commercial and business entities to the aforenoted source separation requirements.

NYSDEC Comment C.17

In regard to waste reduction alternatives and measures, the Town should be more specific as to what the Town is planning to do to encourage and increase waste reduction. Page 9-4 includes a discussion on waste reduction, however, it does not give specifics on a local level. Examples include: preferentials for materials made from recycled materials, DPW related (maintenance/construction) recycling efforts, printing and associated purchasing adjustments, refurbishing vs. new purchase programs, specific educational campaign and promotion of waste reduction to and through all Town and Village Governmental agencies. A program of future ideas and plans should be outlined. Planning specific waste reduction measures and programs is not beyond the scope of his plan, as indicated on Page 6-19, as it is first in the hierarchy of solid waste management as outlined in Chapter 70 Laws of 1988. [360-1.9(f)(1)]

Response to Comment C.17

Section 6.0R of the Revised SWAMP shall provide a discussion of specific waste reduction initiatives that the Town proposes to implement. These initiatives will also be described in the Revised SWAMP, Section 11.0R as part of the Town's revised implementation schedule. Importantly, however, the Town notes that significant developments have occurred with respect to waste reduction since preparation and issuance of the Original SWAMP. Such developments are outlined in the Renewal Petition and will be further described in the Revised SWAMP.

mr\015.RAT

TABLE 3R-1

TOWN OF SOUTHAMPTON
HISTORICAL SOLID WASTE QUANTITIES

MATERIAL TYPE	YEAR 1987 (Tons)	1988 (Tons)	1989 (Tons)	1990 (Tons)	1991 (Tons)
Waste Landfilled (Weighed) (1)	61,160	59,390	62,400	50,300	61,310
Waste Landfilled (Unweighed) (2)	7,330	8,620	6,000	6,000	5,000
Total Waste Landfilled	68,490	68,010	68,400	56,300	66,310
Recyclables Recovered (3)	1,170	2,300	4,240	4,450	5,060
Leaf/Yard Waste Recovered (4)	300	500	2,000	3,500	4,500
Total Materials Recovered	1,470	2,800	6,240	7,950	9,560
C&D Waste Processed (5)	No Data	20,000	20,000	20,000	20,000
Septage Waste Processed (6)	No Data	200	200	200	200
Total Waste Processed	No Data	20,200	20,200	20,200	20,200
Total Waste Generated (7)	69,960	91,010	94,840	84,450	96,070

Notes: (1) Based on North Sea Landfill scalehouse records. Includes all waste received and weighed at the North Sea Landfill.

(2) Based on estimates by North Sea Landfill personnel. Includes all estimated self-hauled waste devlivered to the North Sea Landfill but not weighed.

(3) Based on North Sea Landfill scalehouse records. Includes all recyclables recovered and marketed.

(4) Based on North Sea Landfill scalehouse records and estimates of incoming source separated leaf and yard waste quantities that were reused by Town residents and/or composted at the landfill. Leaf and yard waste composting did not begin until 1989. Additional yard waste beyond typical quantities generated were recovered in 1991 due to Hurricane Bob. These additional quantities are not included in the 1991 leaf and yard waste figure.

(5) Based on estimates of C&D waste processed at private processing and recycling facilities.

(6) Based on estimates and records of "dry" septage processed at the Riverhead Scavenger Waste Treatment Plant.

(7) Sum of Total Waste Landfilled, Total Materials Recovered, and Total Waste Processed.

TABLE 3R-2

TOWN OF SOUTHAMPTON
HISTORICAL QUANTITIES OF RECOVERED MATERIALS (1)

MATERIAL TYPE	YEAR 1987 (Tons)	1988 (Tons)	1989 (Tons)	1990 (Tons)	1991 (Tons)
Newspaper	280	910	1,280	1,730	1,725
Cardboard	160	380	1,420	545	890
Glass	NR	110	285	650	840
Cans	NR	10	40	185	250
Tires	160	130	110	145	140
White Goods	570	670	950	940	875
Other Scrap Metal	NR	20	15	30	NR
Plastics	NR	NR	70	110	205
Aluminum	NR	NR	NR	10	10
Waste Oil	NR	70	70	90	100
Car Batteries	NR	NR	NR	15	15
Office Paper	NR	NR	NR	NR	10
Leaf and Yard Waste	300	500	2,000	3,500	4,500
TOTAL MATERIALS RECOVERED	1,470	2,800	6,240	7,950	9,560

NOTES: (NR) Material was not recycled by the Town.

(1) Represents quantities of source separated recyclables received at the North Sea Landfill and the Hampton Bays and Westhampton transfer stations. Does not include private sector initiatives to source separate and directly market reyclables.

TABLE 3R-3

TOWN OF SOUTHAMPTON
EXISTING WASTE STREAM COMPOSITION DATA

COMPONENTS	COLUMN A (1) LANDFILL DATA (Percent)	COLUMN B (2) COMPOSITION STUDY DATA (Percent)	COLUMN C (3) COMBINED DATA (Percent)	COLUMN D (4) ADJUSTED DATA (Percent)
PAPER	1.2	38.2	34.3	42.0
OCC/Kraft	0.5	11.6	10.5	15.4
Newspaper	0.7			5.9
Office Paper (5)				5.1
Magazines				3.0
Mixed Paper (6)				4.2
Other Paper (7)				8.4
PLASTIC		8.6	7.5	6.2
Film				2.0
HDPE				0.7
PET				0.1
Polystyrene				0.1
Other Plastic (8)				3.3
YARD WASTE	7.7	11.8	17.9	14.9
WOOD	1.1	4.0	4.6	3.8
FOOD	0.3	10.9	9.8	8.2
TEXTILES		3.2	2.8	2.3
OTHER ORGANICS				4.3
METALS		9.1	7.9	6.5
Steel Cans				3.2
Bimetal Cans				0.7
Aluminum Cans				0.9
Other Aluminum				0.4
Other Metals				1.3
GLASS	0.1	14.0	12.1	8.6
Clear				3.8
Brown				0.8
Green				2.4
Other				1.6
SOIL	1.6		1.6	1.6
OTHER INORGANICS (9)		0.2	0.2	0.3
BULKY ITEMS	1.1		1.1	1.1
TIRES	0.2		0.2	0.2
MIXED WASTE	86.7			
TOTAL	100.0	100.0	100.0	100.0

NOTES:

(1) Column A is based on visually characterized incoming solid waste and recyclables. Source is Town Landfill scalehouse data.

(2) Column B is based on H2M waste composition study in 1986.

(3) Column C was calculated by multiplying each component composition in Column B by 87.6 percent and adding the resulting product to the respective component composition in Column A.

(4) Column D is an adjustment of Column C based on other waste composition studies and other municipal waste stream data (See Appendix B of the Original SWAMP).

(5) Office paper includes high grade recyclable paper such as office type stationary.

(6) Mixed paper includes low grade recyclable paper such as household papers, envelopes, and junk mail.

(7) Other paper includes low grade contaminated paper such as used tissues, paper towels and napkins.

(8) Other plastic includes LDPE, PVC, and other mixed plastic.

TABLE 3R-4

TOWN OF SOUTHAMPTON
TOTAL ADJUSTED WASTE STREAM COMPOSITION

MATERIALS	EXISTING WASTE STREAM COMPOSITION (1)	THEORETICAL WASTE GENERATED (3) (TONS)	TOTAL ADJUSTED WASTE STREAM COMPOSITION (4)
MRF MATERIALS			
Newspaper	5.9%	4,476	4.7%
Cardboard	15.0%	11,381	11.8%
Clear Glass	3.8%	2,883	3.0%
Brown Glass	0.8%	607	0.6%
Green Glass	2.4%	1,821	1.9%
Steel Cans	3.2%	2,428	2.5%
Bimetal Cans	0.7%	531	0.6%
Aluminum Cans	0.9%	683	0.7%
Office Paper	5.1%	3,869	4.0%
HDPE Plastic	0.7%	531	0.6%
PET Plastic	0.1%	76	0.1%
Subtotal	38.6%	29,286	30.5%
LEAF/YARD WASTE COMPOSTING			
Leaf/Yard Waste	14.9%	11,305	11.8%
INDOOR ORGANIC COMPOSTING			
Contaminated Paper (5)	8.4%	6,373	6.6%
Food	8.2%	6,221	6.5%
Other Organics	4.3%	3,262	3.4%
Subtotal	20.9%	15,857	16.5%
DIRECT TOWN MARKETING			
White Goods (6)	1.8%	1,366	1.4%
Tires	0.2%	152	0.2%
Subtotal	2.0%	1,517	1.6%
OTHER WASTE RECYCLING			
Textiles	2.3%	1,745	1.8%
Wood Waste	3.8%	2,883	3.0%
Soil	1.6%	1,214	1.3%
Other Paper (7)	7.6%	5,766	6.0%
Other Plastics	5.4%	4,097	4.3%
Other Glass	1.6%	1,214	1.3%
Other Metals	1.0%	759	0.8%
Other Inorganics	0.3%	228	0.2%
Subtotal	23.6%	17,905	18.6%
WASTE FOR PRIVATE PROCESSING			
C&D Waste	(2)	20,000	20.8%
Septage Waste	(2)	200	0.2%
Subtotal	0.0%	20,200	21.0%
TOTALS	100.0%	96,070	100.0%

NOTES:
(1) Based on composition data in Column D of Table 3R-3.
(2) Composition data in Column D of Table did not include this material.
(3) Based on actual and estimated 1991 waste composition and quantities from Tables 3R-1, 3R-2, and 3R-3.
(4) Composition from Original SWAMP is adjusted to account for C&D and septage waste.
(5) Includes similar material to "other paper" as listed on Table 3R-3.
(6) White goods composition derived from portion of "bulky items" and "other metals" listed in Table 3R-3.
(7) Includes similar material to "mixed paper" and "magazines" as listed on Table 3R-3.

TABLE 3R-5

TOWN OF SOUTHAMPTON
THEORETICAL WASTE GENERATION PROJECTIONS (1)

MATERIALS	TOTAL ADJUSTED WASTE STREAM COMPOSITION	1991 (TONS)	1992 (TONS)	1993 (TONS)	1994 (TONS)	1995 (TONS)	1996 (TONS)	1997 (TONS)	1998 (TONS)	1999 (TONS)
MRF MATERIALS										
Newspaper	4.7%	4,476	4,512	4,547	4,583	4,618	4,661	4,706	4,750	4,796
Cardboard	11.8%	11,381	11,471	11,561	11,652	11,739	11,851	11,963	12,077	12,192
Clear Glass	3.0%	2,883	2,906	2,929	2,952	2,974	3,002	3,031	3,060	3,089
Brown Glass	0.6%	607	612	617	621	626	632	638	644	650
Green Glass	1.9%	1,821	1,835	1,850	1,864	1,878	1,896	1,914	1,932	1,951
Steel Cans	2.5%	2,428	2,447	2,466	2,486	2,504	2,528	2,552	2,576	2,601
Bimetal Cans	0.6%	531	535	539	544	548	553	558	564	569
Aluminum Cans	0.7%	683	688	694	699	704	711	718	725	732
Office Paper	4.0%	3,869	3,900	3,931	3,962	3,991	4,029	4,068	4,106	4,145
HDPE Plastic	0.6%	531	535	539	544	548	553	558	564	569
PET Plastic	0.1%	76	76	77	78	78	79	80	81	81
Subtotal	30.5%	29,286	29,517	29,749	29,984	30,209	30,496	30,786	31,078	31,374
LEAF/YARD WASTE COMPOSTING										
Leaf/Yard Waste	11.8%	11,305	11,394	11,483	11,574	11,661	11,772	11,884	11,997	12,111
INDOOR ORGANIC COMPOSTING										
Contaminated Paper	6.6%	6,373	6,423	6,474	6,525	6,574	6,636	6,699	6,763	6,827
Food	6.5%	6,221	6,271	6,320	6,370	6,418	6,478	6,540	6,602	6,665
Other Organics	3.4%	3,262	3,288	3,314	3,340	3,365	3,397	3,429	3,462	3,495
Subtotal	16.5%	15,857	15,982	16,108	16,235	16,357	16,512	16,669	16,827	16,987
DIRECT TOWN MARKETING										
White Goods	1.4%	1,366	1,376	1,387	1,398	1,409	1,422	1,436	1,449	1,463
Tires	0.2%	152	153	154	155	157	158	160	161	163
Subtotal	1.6%	1,517	1,529	1,541	1,554	1,565	1,580	1,595	1,610	1,626
OTHER WASTE RECYCLING										
Textiles	1.8%	1,745	1,759	1,773	1,787	1,800	1,817	1,834	1,852	1,869
Wood Waste	3.0%	2,883	2,906	2,929	2,952	2,974	3,002	3,031	3,060	3,089
Soil	1.3%	1,214	1,224	1,233	1,243	1,252	1,264	1,276	1,288	1,300
Other Paper	6.0%	5,766	5,812	5,857	5,904	5,948	6,004	6,061	6,119	6,177
Other Plastics	4.5%	4,087	4,129	4,162	4,195	4,226	4,266	4,307	4,348	4,389
Other Glass	1.3%	1,214	1,224	1,233	1,243	1,252	1,264	1,276	1,288	1,300
Other Metals	0.8%	759	765	771	777	783	790	798	805	813
Other Inorganics	0.2%	228	229	231	233	235	237	239	242	244
Subtotal	18.6%	17,905	18,047	18,189	18,332	18,470	18,645	18,822	19,001	19,182
WASTE FOR PRIVATE PROCESSING										
C&D Waste	20.8%	20,000	20,158	20,316	20,477	20,631	20,826	21,024	21,224	21,426
Septage Waste	0.2%	200	202	203	205	206	208	210	212	214
Subtotal	21.0%	20,200	20,360	20,520	20,682	20,837	21,035	21,234	21,436	21,640
TOTALS	100.0%	96,070	96,830	97,590	98,360	99,100	100,040	100,990	101,950	102,920

NOTES: (1) Projected waste quantities are based on similar rates of increase as described in the Original IRWAMP.

TABLE 3R-5

TOWN OF SOUTHAMPTON
THEORETICAL WASTE GENERATION PROJECTIONS (1)

MATERIALS	2000 (TONS)	2001 (TONS)	2002 (TONS)	2003 (TONS)	2004 (TONS)	2005 (TONS)	2006 (TONS)	2007 (TONS)	2008 (TONS)	2009 (TONS)	2010 (TONS)
MRF MATERIALS											
Newspaper	4,841	4,900	4,959	5,019	5,080	5,139	5,196	5,253	5,311	5,369	5,428
Cardboard	12,308	12,457	12,608	12,761	12,915	13,066	13,210	13,355	13,502	13,650	13,801
Clear Glass	3,118	3,156	3,194	3,233	3,272	3,310	3,346	3,383	3,421	3,458	3,496
Brown Glass	656	664	672	681	689	697	705	712	720	728	736
Green Glass	1,969	1,995	2,017	2,042	2,066	2,091	2,114	2,137	2,160	2,184	2,208
Steel Cans	2,626	2,658	2,690	2,722	2,755	2,787	2,818	2,849	2,880	2,912	2,944
Bimetal Cans	574	581	588	595	603	610	616	623	630	637	644
Aluminum Cans	738	747	756	766	775	784	793	801	810	819	828
Office Paper	4,185	4,235	4,287	4,339	4,391	4,443	4,491	4,541	4,591	4,641	4,692
HDPE Plastic	574	581	588	595	603	610	616	623	630	637	644
PET Plastic	82	83	84	85	86	87	88	89	90	91	92
Subtotal	31,673	32,057	32,444	32,837	33,233	33,624	33,995	34,367	34,745	35,127	35,514
LEAF/YARD WASTE COMPOSTING											
Leaf/Yard Waste	12,226	12,374	12,524	12,675	12,828	12,979	13,121	13,266	13,412	13,559	13,709
INDOOR ORGANIC COMPOSTING											
Contaminated Paper	6,893	6,976	7,060	7,146	7,232	7,317	7,397	7,479	7,561	7,644	7,728
Food	6,728	6,810	6,892	6,976	7,060	7,143	7,221	7,301	7,381	7,462	7,544
Other Organics	3,528	3,571	3,614	3,658	3,702	3,746	3,787	3,829	3,871	3,913	3,956
Subtotal	17,149	17,357	17,567	17,780	17,994	18,206	18,405	18,608	18,813	19,019	19,229
DIRECT TOWN MARKETING											
White Goods	1,477	1,495	1,513	1,531	1,550	1,568	1,585	1,603	1,620	1,638	1,656
Tires	164	166	168	170	172	174	176	178	180	182	184
Subtotal	1,641	1,661	1,681	1,701	1,722	1,742	1,761	1,781	1,800	1,820	1,840
OTHER WASTE RECYCLING											
Textiles	1,887	1,910	1,933	1,957	1,980	2,003	2,025	2,048	2,070	2,093	2,116
Wood Waste	3,118	3,156	3,194	3,233	3,272	3,310	3,346	3,383	3,421	3,458	3,496
Soil	1,313	1,329	1,345	1,361	1,378	1,394	1,409	1,425	1,440	1,456	1,472
Other Paper	6,236	6,312	6,388	6,465	6,543	6,620	6,693	6,767	6,841	6,916	6,992
Other Plastics	4,431	4,485	4,539	4,594	4,649	4,704	4,755	4,808	4,861	4,914	4,968
Other Glass	1,313	1,329	1,345	1,361	1,378	1,394	1,409	1,425	1,440	1,456	1,472
Other Metals	821	830	841	851	861	871	881	890	900	910	920
Other Inorganics	246	249	252	255	258	261	264	267	270	273	276
Subtotal	19,365	19,599	19,836	20,077	20,319	20,557	20,783	21,012	21,243	21,476	21,713
WASTE FOR PRIVATE PROCESSING											
C&D Waste	21,630	21,892	22,157	22,425	22,696	22,962	23,214	23,470	23,729	23,989	24,253
Septage Waste	216	219	222	224	227	230	232	235	237	240	243
Subtotal	21,846	22,111	22,378	22,650	22,923	23,192	23,446	23,705	23,966	24,229	24,496
TOTALS	103,900	105,160	106,430	107,720	109,020	110,300	111,510	112,740	113,980	115,230	116,500

NOTES: (1) Projected waste quantities are based on similar rates of increase as described in the Original SWAMP.

TABLE 3R-6
TOWN OF SOUTHAMPTON
ESTIMATED WASTE GENERATION AFTER WASTE REDUCTION (1)

MATERIALS	1991 (TONS)	1992 (TONS)	1993 (TONS)	1994 (TONS)	1995 (TONS)	1996 (TONS)	1997 (TONS)	1998 (TONS)	1999 (TONS)	2000 (TONS)
THEORETICAL WASTE GENERATED	96,070	96,830	97,590	98,360	99,100	100,040	100,990	101,950	102,920	103,900
PLANNED WASTE REDUCTION	NA	5%	6%	7%	8%	9%	10%	10%	10%	10%
MRF MATERIALS										
Newspaper	4,476	4,286	4,274	4,262	4,247	4,241	4,234	4,274	4,315	4,356
Cardboard	11,381	10,896	10,865	10,834	10,798	10,782	10,765	10,867	10,970	11,075
Clear Glass	2,883	2,760	2,753	2,745	2,736	2,731	2,727	2,753	2,779	2,806
Brown Glass	607	581	579	578	576	575	574	580	585	591
Green Glass	1,821	1,743	1,738	1,734	1,728	1,725	1,722	1,739	1,755	1,772
Steel Cans	2,428	2,324	2,318	2,311	2,304	2,300	2,296	2,318	2,340	2,363
Bimetal Cans	531	508	507	506	504	503	502	507	512	517
Aluminum Cans	683	654	652	650	648	647	646	652	658	664
Office Paper	3,869	3,705	3,694	3,684	3,671	3,666	3,660	3,695	3,730	3,765
HDPE Plastic	551	508	507	506	504	503	502	507	512	517
PET Plastic	76	73	72	72	72	72	72	72	73	74
Subtotal	29,286	28,039	27,961	27,881	27,788	27,746	27,701	27,964	28,230	28,499
LEAF/YARD WASTE COMPOSTING										
Leaf/Yard Waste	11,305	10,825	10,793	10,762	10,726	10,710	10,693	10,794	10,897	11,001
INDOOR ORGANIC COMPOSTING										
Contaminated Paper	6,373	6,102	6,085	6,067	6,047	6,038	6,028	6,085	6,143	6,202
Food	6,221	5,956	5,940	5,923	5,903	5,894	5,885	5,941	5,997	6,054
Other Organics	3,262	3,123	3,115	3,106	3,096	3,091	3,086	3,115	3,145	3,175
Subtotal	15,857	15,181	15,139	15,096	15,046	15,023	14,999	15,141	15,285	15,431
DIRECT TOWN MARKETING										
White Goods	1,366	1,307	1,304	1,300	1,296	1,294	1,292	1,304	1,316	1,329
Tires	152	145	145	144	144	144	144	145	146	148
Subtotal	1,517	1,453	1,449	1,445	1,440	1,438	1,435	1,449	1,463	1,477
OTHER WASTE RECYCLING										
Textiles	1,745	1,671	1,666	1,661	1,656	1,653	1,651	1,666	1,682	1,698
Wood Waste	2,883	2,760	2,753	2,745	2,736	2,731	2,727	2,753	2,779	2,806
Soil	1,214	1,162	1,159	1,156	1,152	1,150	1,148	1,159	1,170	1,181
Other Paper	5,766	5,521	5,505	5,489	5,471	5,463	5,454	5,506	5,558	5,611
Other Plastics	4,097	3,922	3,912	3,900	3,887	3,882	3,875	3,912	3,949	3,987
Other Glass	1,214	1,162	1,159	1,156	1,152	1,150	1,148	1,159	1,170	1,181
Other Metals	759	726	724	722	720	719	718	724	731	738
Other Inorganics	228	218	217	217	216	216	215	217	219	221
Subtotal	17,905	17,143	17,095	17,046	16,989	16,964	16,936	17,097	17,260	17,424
WASTE FOR PRIVATE PROCESSING										
C&D Waste	20,000	19,148	19,095	19,040	18,977	18,948	18,917	19,097	19,279	19,463
Septage Waste	200	202	203	205	206	208	210	212	214	216
Subtotal	20,200	19,350	19,298	19,245	19,183	19,156	19,128	19,310	19,493	19,679
REMAINING WASTE	96,070	91,989	91,735	91,475	91,172	91,036	90,891	91,715	92,628	93,510
NET WASTE REDUCTION	NA	4,841	5,855	6,885	7,928	9,004	10,099	10,195	10,292	10,390

NOTE: (1) Waste stream reduction is based on State goals of 10 percent waste reduction by 1997. No reduction in septage occurs.

TABLE 3R-6

TOWN OF SOUTHAMPTON

ESTIMATED WASTE GENERATION AFTER WASTE REDUCTION (1)

MATERIALS	2001 (TONS)	2002 (TONS)	2003 (TONS)	2004 (TONS)	2005 (TONS)	2006 (TONS)	2007 (TONS)	2008 (TONS)	2009 (TONS)	2010 (TONS)
THEORETICAL WASTE GENERATED	105,160	106,430	107,720	109,020	110,300	111,510	112,740	113,980	115,230	116,500
PLANNED WASTE REDUCTION	10%	10%	10%	10%	10%	10%	10%	10%	10%	10%
MRF MATERIALS										
Newspaper	4,409	4,462	4,516	4,571	4,624	4,675	4,727	4,779	4,831	4,884
Cardboard	11,209	11,344	11,482	11,620	11,757	11,886	12,017	12,149	12,282	12,418
Clear Glass	2,840	2,874	2,909	2,944	2,978	3,011	3,044	3,078	3,112	3,146
Brown Glass	598	605	612	620	627	634	641	648	655	662
Green Glass	1,793	1,815	1,837	1,859	1,881	1,902	1,923	1,944	1,965	1,987
Steel Cans	2,391	2,420	2,449	2,479	2,508	2,536	2,564	2,592	2,620	2,649
Bimetal Cans	523	529	536	542	549	555	561	567	573	579
Aluminum Cans	673	681	689	697	705	713	721	729	737	745
Office Paper	3,811	3,857	3,904	3,951	3,997	4,041	4,086	4,131	4,176	4,222
HDPE Plastic	523	529	536	542	549	555	561	567	573	579
PET Plastic	75	76	77	77	78	79	80	81	82	83
Subtotal	28,844	29,195	29,547	29,903	30,254	30,586	30,924	31,264	31,607	31,955
LEAF/YARD WASTE COMPOSTING										
Leaf/Yard Waste	11,134	11,269	11,405	11,543	11,678	11,807	11,937	12,068	12,200	12,335
INDOOR ORGANIC COMPOSTING										
Contaminated Paper	6,277	6,353	6,430	6,507	6,584	6,656	6,729	6,803	6,878	6,954
Food	6,128	6,202	6,277	6,352	6,427	6,498	6,569	6,642	6,714	6,788
Other Organics	3,213	3,252	3,291	3,331	3,370	3,407	3,445	3,483	3,521	3,560
Subtotal	15,618	15,806	15,998	16,190	16,381	16,561	16,744	16,928	17,113	17,302
DIRECT TOWN MARKETING										
White Goods	1,345	1,361	1,378	1,394	1,411	1,426	1,442	1,458	1,474	1,490
Tires	149	151	153	155	157	158	160	162	164	166
Subtotal	1,495	1,513	1,531	1,549	1,568	1,585	1,602	1,620	1,638	1,656
OTHER WASTE RECYCLING										
Textiles	1,719	1,739	1,761	1,782	1,803	1,822	1,843	1,863	1,883	1,904
Wood Waste	2,840	2,874	2,909	2,944	2,978	3,011	3,044	3,078	3,112	3,146
Soil	1,196	1,210	1,225	1,240	1,254	1,268	1,282	1,296	1,310	1,325
Other Paper	5,679	5,748	5,817	5,888	5,957	6,022	6,089	6,156	6,223	6,292
Other Plastics	4,055	4,084	4,133	4,183	4,232	4,279	4,326	4,374	4,422	4,470
Other Glass	1,196	1,210	1,225	1,240	1,254	1,268	1,282	1,296	1,310	1,325
Other Metals	747	756	765	775	784	792	801	810	819	828
Other Inorganics	224	227	230	232	235	238	240	243	246	248
Subtotal	17,633	17,848	18,065	18,283	18,497	18,700	18,907	19,115	19,324	19,537
WASTE FOR PRIVATE PROCESSING										
C&D Waste	19,699	19,936	20,178	20,422	20,661	20,888	21,118	21,351	21,585	21,823
Septage Waste	219	222	224	227	230	232	235	237	240	243
Subtotal	19,918	20,158	20,402	20,649	20,891	21,120	21,353	21,588	21,825	22,065
REMAINING WASTE	94,644	95,787	96,948	98,118	99,270	100,359	101,466	102,582	103,707	104,850
NET WASTE REDUCTION	10,516	10,643	10,772	10,902	11,030	11,151	11,274	11,398	11,523	11,650

NOTE: (1) Waste stream reduction is based on State goals of 10 percent waste reduction by 1997. No reduction in septage occurs.

TABLE 3R-7
TOWN OF SOUTHAMPTON
ESTIMATED MATERIAL RECOVERY PROJECTIONS (1)

MATERIALS	1991 WASTE GENERATED (TONS)	1991 PERCENT RECOVERY	1991 MATERIALS RECOVERED (TONS)	1992 WASTE GENERATED (TONS)	1992 PERCENT RECOVERY	1992 MATERIALS RECOVERED (TONS)
MRF MATERIALS						
Newspaper	4,476	38.5%	1,725	4,286	46.2%	1,982
Cardboard	11,381	7.8%	890	10,896	15.6%	1,704
Clear Glass	2,883	16.0%	460	2,780	32.0%	883
Brown Glass	607	14.8%	90	581	29.6%	172
Green Glass	1,821	15.9%	290	1,743	31.8%	554
Steel Cans	2,428	6.8%	165	2,324	17.0%	395
Bimetal Cans	531	7.5%	40	508	18.8%	95
Aluminum Cans	683	6.6%	45	654	16.5%	108
Office Paper	3,869	0.3%	10	3,705	12.9%	479
HDPE Plastic	531	33.9%	180	508	37.3%	190
PET Plastic	76	33.0%	25	73	36.3%	26
Subtotal	29,286		3,920	28,039		6,589
LEAF/YARD WASTE COMPOSTING						
Leaf/Yard Waste	11,305	39.8%	4,500	10,823	51.7%	5,601
INDOOR ORGANIC COMPOSTING						
Contaminated Paper	6,373	0.0%	0	6,102	0.0%	0
Food	6,221	0.0%	0	5,956	0.0%	0
Other Organics	3,262	0.0%	0	3,123	0.0%	0
Subtotal	15,857		0	15,181		0
DIRECT TOWN MARKETING						
White Goods	1,366	64.1%	875	1,307	70.3%	922
Tires	152	92.3%	140	145	92.7%	135
Subtotal	1,517		1,015	1,453		1,056
OTHER WASTE RECYCLING						
Textiles	1,745	0.0%	0	1,671	5.0%	84
Wood Waste	2,885	0.0%	0	2,760	10.0%	276
Soil	1,214	0.0%	0	1,162	5.0%	58
Other Paper	5,766	0.0%	0	5,521	15.0%	828
Other Plastics	4,097	0.0%	0	3,922	10.0%	392
Other Glass	1,214	0.0%	0	1,162	10.0%	116
Other Metals	759	1.3%	10	726	20.0%	145
Other Inorganics	228	50.5%	115	218	55.6%	121
Subtotal	17,905		125	17,143		2,021
WASTE FOR PRIVATE PROCESSING						
C&D Waste	20,000	75.0%	15,000	19,148	75.0%	14,361
Septage Waste	200	0.0%	0	202	0.0%	0
Subtotal	20,200		15,000	19,350		14,361
SUBTOTAL	96,070	25.6%	24,560	91,989	32.2%	29,628
MIXED WASTE COMPOSTING						
Mixed Waste Available (2)	66,310			57,372		
Quantity Composted (3)			0			0
Percent Recovery (4)		0.0%			0.0%	
Quantity of Residue (5)			0			0
WASTE STREAM SUMMARY						
Total Waste Landfilled (6)			66,310			57,372
Total Recycling Rate		25.6%			32.2%	
Waste Reduction Rate		NA			5.0%	
Total Reduction/Recycling Rate		25.6%			37.2%	

NOTES:(1) Waste Generated is based on remaining waste after waste reduction initiatives (Table 3R-6) and Percent Recovery is based on estimates of recovery for each material.

(2) Quantity of mixed waste remaining (excluding C&D and septage waste) after recovery of materials indicated for each year.

(3) Quantity of mixed waste composted indoors at the proposed integrated waste management facility during periods when the facility has excess capacity.

(4) Percent of total mixed waste generated that is composted.

(5) Assumes 75 percent of mixed waste that is composted will be residue

TABLE 3R-7
TOWN OF SOUTHAMPTON
ESTIMATED MATERIAL RECOVERY PROJECTIONS (1)

MATERIALS	1993 WASTE GENERATED (TONS)	1993 PERCENT RECOVERY	1993 MATERIALS RECOVERED (TONS)	1994 WASTE GENERATED (TONS)	1994 PERCENT RECOVERY	1994 MATERIALS RECOVERED (TONS)
MRF MATERIALS						
Newspaper	4,274	60.1%	2,569	4,262	72.1%	3,074
Cardboard	10,865	31.3%	3,399	10,834	46.9%	5,084
Clear Glass	2,753	48.0%	1,321	2,745	52.8%	1,449
Brown Glass	579	44.4%	257	578	48.8%	282
Green Glass	1,738	47.7%	829	1,734	52.5%	910
Steel Cans	2,318	34.0%	788	2,311	37.4%	864
Bimetal Cans	507	37.5%	190	506	41.3%	209
Aluminum Cans	652	33.0%	215	650	36.3%	236
Office Paper	3,694	32.3%	1,193	3,684	48.5%	1,785
HDPE Plastic	507	41.0%	208	506	43.1%	218
PET Plastic	72	39.9%	29	72	41.9%	30
Subtotal	27,961		11,000	27,881		14,141
LEAF/YARD WASTE COMPOSTING						
Leaf/Yard Waste	10,793	67.3%	7,261	10,762	74.0%	7,964
INDOOR ORGANIC COMPOSTING						
Contaminated Paper	6,085	0.0%	0	6,067	0.0%	0
Food	5,940	0.0%	0	5,923	0.0%	0
Other Organics	3,115	0.0%	0	3,106	0.0%	0
Subtotal	15,139		0	15,096		0
DIRECT TOWN MARKETING						
White Goods	1,304	77.5%	1,011	1,300	81.4%	1,058
Tires	145	93.2%	135	144	93.7%	135
Subtotal	1,449		1,146	1,445		1,194
OTHER WASTE RECYCLING						
Textiles	1,666	15.0%	250	1,661	30.0%	498
Wood Waste	2,753	20.0%	551	2,745	30.0%	823
Soil	1,159	12.5%	145	1,156	25.0%	289
Other Paper	5,505	36.0%	1,982	5,489	54.0%	2,964
Other Plastics	3,912	25.0%	978	3,900	40.0%	1,560
Other Glass	1,159	25.0%	290	1,156	37.5%	433
Other Metals	724	44.6%	323	722	66.9%	483
Other Inorganics	217	61.1%	133	217	67.2%	146
Subtotal	17,095		4,651	17,046		7,198
WASTE FOR PRIVATE PROCESSING						
C&D Waste	19,095	75.0%	14,321	19,040	75.0%	14,280
Septage Waste	203	0.0%	0	205	0.0%	0
Subtotal	19,298		14,321	19,245		14,280
SUBTOTAL	91,735	41.8%	38,378	91,475	48.9%	44,777
MIXED WASTE COMPOSTING						
Mixed Waste Available (2)	48,380			41,733		
Quantity Composted (3)			0			0
Percent Recovery (4)		0.0%			0.0%	
Quantity of Residue (5)			0			0
WASTE STREAM SUMMARY						
Total Waste Landfilled (6)			48,380			41,733
Total Recycling Rate		41.8%			48.9%	
Waste Reduction Rate		6.0%			7.0%	
Total Reduction/Recycling Rate		47.8%			55.9%	

TABLE 3R-7
TOWN OF SOUTHAMPTON
ESTIMATED MATERIAL RECOVERY PROJECTIONS (1)

MATERIALS	1995 WASTE GENERATED (TONS)	1995 PERCENT RECOVERY	1995 MATERIALS RECOVERED (TONS)	1996 WASTE GENERATED (TONS)	1996 PERCENT RECOVERY	1996 MATERIALS RECOVERED (TONS)
MRF MATERIALS						
Newspaper	4,247	75.7%	3,217	4,241	76.5%	3,244
Cardboard	10,798	51.6%	5,574	10,782	54.2%	5,843
Clear Glass	2,736	55.4%	1,517	2,731	58.2%	1,590
Brown Glass	576	51.3%	295	575	53.8%	310
Green Glass	1,728	55.1%	952	1,725	57.8%	998
Steel Cans	2,304	41.1%	948	2,300	43.2%	994
Bimetal Cans	504	45.4%	229	503	47.6%	240
Aluminum Cans	648	39.9%	259	647	41.9%	271
Office Paper	3,671	58.1%	2,135	3,666	61.1%	2,238
HDPE Plastic	504	45.2%	228	503	45.7%	230
PET Plastic	72	44.0%	32	72	44.5%	32
Subtotal	27,788		15,384	27,746		15,990
LEAF/YARD WASTE COMPOSTING						
Leaf/Yard Waste	10,726	77.7%	8,334	10,710	78.5%	8,405
INDOOR ORGANIC COMPOSTING						
Contaminated Paper	6,047	25.0%	1,512	6,038	37.5%	2,264
Food	5,903	20.0%	1,181	5,894	32.0%	1,886
Other Organics	3,096	30.0%	929	3,091	45.0%	1,391
Subtotal	15,046		3,621	15,023		5,541
DIRECT TOWN MARKETING						
White Goods	1,296	82.2%	1,065	1,294	83.0%	1,074
Tires	144	93.7%	135	144	93.8%	135
Subtotal	1,440		1,200	1,438		1,209
OTHER WASTE RECYCLING						
Textiles	1,656	45.0%	745	1,653	49.5%	818
Wood Waste	2,736	48.0%	1,313	2,731	52.8%	1,442
Soil	1,152	40.0%	461	1,150	44.0%	506
Other Paper	5,471	64.8%	3,545	5,463	71.3%	3,894
Other Plastics	3,887	44.8%	1,742	3,882	47.0%	1,826
Other Glass	1,152	41.3%	475	1,150	43.3%	498
Other Metals	720	70.2%	506	719	70.9%	510
Other Inorganics	216	70.6%	152	216	71.3%	154
Subtotal	16,989		8,939	16,964		9,648
WASTE FOR PRIVATE PROCESSING						
C&D Waste	18,977	75.0%	14,233	18,948	75.0%	14,211
Septage Waste	206	0.0%	0	208	0.0%	0
Subtotal	19,183		14,233	19,156		14,211
SUBTOTAL	91,172	56.7%	51,712	91,036	60.4%	55,005
MIXED WASTE COMPOSTING						
Mixed Waste Available (2)	34,510			31,086		
Quantity Composted (3)			10,979			9,059
Percent Recovery (4)		12.0%			10.0%	
Quantity of Residue (5)			8,254			6,794
WASTE STREAM SUMMARY						
Total Waste Landfilled (6)			31,765			28,821
Total Recycling Rate		68.8%			70.4%	
Waste Reduction Rate		8.0%			9.0%	
Total Reduction/Recycling Rate		76.8%			79.4%	

TABLE 3R-7
TOWN OF SOUTHAMPTON
ESTIMATED MATERIAL RECOVERY PROJECTIONS (1)

MATERIALS	1997 WASTE GENERATED (TONS)	1997 PERCENT RECOVERY	1997 MATERIALS RECOVERED (TONS)	1998 WASTE GENERATED (TONS)	1998 PERCENT RECOVERY	1998 MATERIALS RECOVERED (TONS)
MRF MATERIALS						
Newspaper	4,234	77.3%	3,272	4,274	78.0%	3,336
Cardboard	10,765	56.9%	6,126	10,867	57.5%	6,246
Clear Glass	2,727	61.1%	1,667	2,753	64.2%	1,767
Brown Glass	574	56.5%	325	580	59.4%	344
Green Glass	1,722	60.7%	1,046	1,739	63.8%	1,109
Steel Cans	2,296	45.4%	1,042	2,318	45.8%	1,062
Bimetal Cans	502	48.1%	242	507	48.6%	246
Aluminum Cans	646	44.0%	284	652	44.5%	290
Office Paper	3,660	64.1%	2,346	3,695	64.8%	2,392
HDPE Plastic	502	46.1%	232	507	46.6%	236
PET Plastic	72	44.9%	32	72	45.4%	33
Subtotal	27,701		16,613	27,964		17,061
LEAF/YARD WASTE COMPOSTING						
Leaf/Yard Waste	10,693	79.3%	8,475	10,794	80.1%	8,641
INDOOR ORGANIC COMPOSTING						
Contaminated Paper	6,028	45.0%	2,713	6,085	49.5%	3,012
Food	5,885	48.0%	2,825	5,941	52.8%	3,137
Other Organics	3,086	63.0%	1,944	3,115	69.3%	2,159
Subtotal	14,999		7,481	15,141		8,308
DIRECT TOWN MARKETING						
White Goods	1,292	83.9%	1,083	1,304	84.7%	1,105
Tires	144	93.9%	135	145	94.0%	136
Subtotal	1,435		1,218	1,449		1,241
OTHER WASTE RECYCLING						
Textiles	1,651	52.0%	858	1,666	54.6%	909
Wood Waste	2,727	55.4%	1,512	2,753	55.7%	1,534
Soil	1,148	46.2%	530	1,159	46.7%	541
Other Paper	5,454	74.8%	4,082	5,506	75.6%	4,162
Other Plastics	3,875	47.5%	1,841	3,912	48.0%	1,877
Other Glass	1,148	43.7%	502	1,159	44.2%	512
Other Metals	718	71.3%	512	724	71.7%	519
Other Inorganics	215	72.0%	155	217	72.4%	157
Subtotal	16,936		9,992	17,097		10,212
WASTE FOR PRIVATE PROCESSING						
C&D Waste	18,917	75.0%	14,188	19,097	75.0%	14,323
Septage Waste	210	0.0%	0	212	0.0%	0
Subtotal	19,128		14,188	19,310		14,323
SUBTOTAL	90,891	63.8%	57,968	91,755	65.2%	59,786
MIXED WASTE COMPOSTING						
Mixed Waste Available (2)	27,983			26,983		
Quantity Composted (3)			7,119			6,292
Percent Recovery (4)		7.8%			6.9%	
Quantity of Residue (5)			5,339			4,719
WASTE STREAM SUMMARY						
Total Waste Landfilled (6)			26,204			25,410
Total Recycling Rate		71.6%			72.0%	
Waste Reduction Rate		10.0%			10.0%	
Total Reduction/Recycling Rate		81.6%			82.0%	

TABLE 3R-7
TOWN OF SOUTHAMPTON
ESTIMATED MATERIAL RECOVERY PROJECTIONS (1)

MATERIALS	1999 WASTE GENERATED (TONS)	1999 PERCENT RECOVERY	1999 MATERIALS RECOVERED (TONS)	2000 WASTE GENERATED (TONS)	2000 PERCENT RECOVERY	2000 MATERIALS RECOVERED (TONS)
MRF MATERIALS						
Newspaper	4,315	78.8%	3,401	4,356	79.6%	3,468
Cardboard	10,970	58.0%	6,368	11,075	58.6%	6,493
Clear Glass	2,779	64.8%	1,801	2,806	65.5%	1,837
Brown Glass	585	62.3%	365	591	63.0%	372
Green Glass	1,755	64.4%	1,131	1,772	65.1%	1,153
Steel Cans	2,340	46.3%	1,083	2,363	46.7%	1,104
Bimetal Cans	512	49.1%	251	517	49.6%	256
Aluminum Cans	658	44.9%	296	664	45.4%	301
Office Paper	3,730	65.4%	2,439	3,765	66.1%	2,487
HDPE Plastic	512	47.1%	241	517	47.3%	244
PET Plastic	73	45.8%	34	74	46.0%	34
Subtotal	28,230		17,409	28,499		17,750
LEAF/YARD WASTE COMPOSTING						
Leaf/Yard Waste	10,897	80.9%	8,811	11,001	81.7%	8,984
INDOOR ORGANIC COMPOSTING						
Contaminated Paper	6,143	52.0%	3,193	6,202	54.6%	3,385
Food	5,997	55.4%	3,325	6,054	58.2%	3,524
Other Organics	3,145	72.8%	2,288	3,175	76.4%	2,426
Subtotal	15,285		8,806	15,431		9,334
DIRECT TOWN MARKETING						
White Goods	1,316	85.6%	1,126	1,329	86.4%	1,148
Tires	146	94.1%	138	148	94.2%	139
Subtotal	1,463		1,264	1,477		1,287
OTHER WASTE RECYCLING						
Textiles	1,682	55.1%	927	1,698	55.7%	945
Wood Waste	2,779	56.0%	1,556	2,806	56.3%	1,579
Soil	1,170	47.1%	551	1,181	47.4%	560
Other Paper	5,558	76.3%	4,244	5,611	77.1%	4,327
Other Plastics	3,949	48.2%	1,905	3,987	48.5%	1,932
Other Glass	1,170	44.4%	520	1,181	44.6%	527
Other Metals	731	72.0%	527	738	72.4%	534
Other Inorganics	219	72.8%	160	221	73.1%	162
Subtotal	17,260		10,389	17,424		10,566
WASTE FOR PRIVATE PROCESSING						
C&D Waste	19,279	75.0%	14,459	19,463	75.0%	14,597
Septage Waste	214	0.0%	0	216	0.0%	0
Subtotal	19,493		14,459	19,679		14,597
SUBTOTAL	92,628	66.0%	61,139	93,510	66.9%	62,519
MIXED WASTE COMPOSTING						
Mixed Waste Available (2)	26,456			25,910		
Quantity Composted (3)			5,794			5,266
Percent Recovery (4)		6.3%			5.6%	
Quantity of Residue (5)			4,345			3,949
WASTE STREAM SUMMARY						
Total Waste Landfilled (6)			25,007			24,593
Total Recycling Rate		72.3%			72.5%	
Waste Reduction Rate		10.0%			10.0%	
Total Reduction/Recycling Rate		82.3%			82.5%	

TABLE 3R-7
TOWN OF SOUTHAMPTON
ESTIMATED MATERIAL RECOVERY PROJECTIONS (1)

MATERIALS	2001 WASTE GENERATED (TONS)	2001 PERCENT RECOVERY	2001 MATERIALS RECOVERED (TONS)	2002 WASTE GENERATED (TONS)	2002 PERCENT RECOVERY	2002 MATERIALS RECOVERED (TONS)
MRF MATERIALS						
Newspaper	4,409	80.4%	3,545	4,462	81.2%	3,624
Cardboard	11,209	59.2%	6,637	11,344	59.8%	6,785
Clear Glass	2,840	66.1%	1,878	2,874	66.8%	1,919
Brown Glass	598	63.6%	380	605	64.2%	389
Green Glass	1,793	65.7%	1,178	1,815	66.4%	1,205
Steel Cans	2,391	47.2%	1,129	2,420	47.7%	1,154
Bimetal Cans	523	50.1%	262	529	50.6%	268
Aluminum Cans	673	45.8%	308	681	46.3%	315
Office Paper	3,811	66.7%	2,542	3,857	67.4%	2,599
HDPE Plastic	523	47.5%	249	529	47.8%	253
PET Plastic	75	46.3%	35	76	46.5%	35
Subtotal	28,844		18,143	29,193		18,544
LEAF/YARD WASTE COMPOSTING						
Leaf/Yard Waste	11,134	82.5%	9,184	11,269	83.3%	9,387
INDOOR ORGANIC COMPOSTING						
Contaminated Paper	6,277	55.1%	3,460	6,353	55.7%	3,537
Food	6,128	58.8%	3,605	6,202	59.4%	3,683
Other Organics	3,213	80.2%	2,578	3,252	84.2%	2,739
Subtotal	15,618		9,640	15,806		9,959
DIRECT TOWN MARKETING						
White Goods	1,345	87.3%	1,174	1,361	88.1%	1,200
Tires	149	94.3%	141	151	94.4%	143
Subtotal	1,495		1,315	1,513		1,343
OTHER WASTE RECYCLING						
Textiles	1,719	56.2%	966	1,739	56.8%	988
Wood Waste	2,840	56.6%	1,606	2,874	56.8%	1,634
Soil	1,196	47.6%	569	1,210	47.8%	579
Other Paper	5,679	77.9%	4,423	5,748	78.7%	4,521
Other Plastics	4,035	48.7%	1,966	4,084	49.0%	1,999
Other Glass	1,196	44.8%	536	1,210	45.1%	545
Other Metals	747	72.7%	544	756	73.1%	553
Other Inorganics	224	73.5%	165	227	73.8%	168
Subtotal	17,635		10,775	17,848		10,987
WASTE FOR PRIVATE PROCESSING						
C&D Waste	19,699	75.0%	14,774	19,936	75.0%	14,952
Septage Waste	219	0.0%	0	222	0.0%	0
Subtotal	19,918		14,774	20,158		14,952
SUBTOTAL	94,644	67.4%	63,830	95,787	68.0%	65,172
MIXED WASTE COMPOSTING						
Mixed Waste Available (2)	25,670			25,409		
Quantity Composted (3)			4,960			4,641
Percent Recovery (4)		5.2%			4.8%	
Quantity of Residue (5)			3,720			3,481
WASTE STREAM SUMMARY						
Total Waste Landfilled (6)			24,430			24,249
Total Recycling Rate		72.7%			72.9%	
Waste Reduction Rate		10.0%			10.0%	
Total Reduction/Recycling Rate		82.7%			82.9%	

TABLE 3R-7
TOWN OF SOUTHAMPTON
ESTIMATED MATERIAL RECOVERY PROJECTIONS (1)

MATERIALS	2003 WASTE GENERATED (TONS)	2003 PERCENT RECOVERY	2003 MATERIALS RECOVERED (TONS)	2004 WASTE GENERATED (TONS)	2004 PERCENT RECOVERY	2004 MATERIALS RECOVERED (TONS)
MRF MATERIALS						
Newspaper	4,516	82.0%	3,704	4,571	82.8%	3,786
Cardboard	11,482	60.4%	6,936	11,620	61.0%	7,090
Clear Glass	2,909	67.5%	1,962	2,944	67.8%	1,996
Brown Glass	612	64.9%	397	620	65.5%	406
Green Glass	1,837	67.0%	1,231	1,859	67.7%	1,259
Steel Cans	2,449	48.1%	1,179	2,479	48.6%	1,206
Bimetal Cans	536	51.1%	274	542	51.6%	280
Aluminum Cans	689	46.7%	322	697	47.2%	329
Office Paper	3,904	68.1%	2,657	3,951	68.7%	2,716
HDPE Plastic	536	48.0%	257	542	48.2%	262
PET Plastic	77	46.7%	36	77	47.0%	36
Subtotal	29,547		18,955	29,903		19,365
LEAF/YARD WASTE COMPOSTING						
Leaf/Yard Waste	11,405	84.1%	9,596	11,543	85.0%	9,809
INDOOR ORGANIC COMPOSTING						
Contaminated Paper	6,430	55.9%	3,597	6,507	56.2%	3,659
Food	6,277	59.7%	3,746	6,352	60.0%	3,810
Other Organics	3,291	85.1%	2,800	3,331	85.9%	2,862
Subtotal	15,998		10,144	16,191		10,332
DIRECT TOWN MARKETING						
White Goods	1,378	89.0%	1,227	1,394	89.9%	1,254
Tires	153	94.5%	145	155	94.6%	147
Subtotal	1,531		1,371	1,549		1,400
OTHER WASTE RECYCLING						
Textiles	1,761	57.4%	1,010	1,782	57.9%	1,032
Wood Waste	2,909	57.1%	1,662	2,944	57.4%	1,690
Soil	1,225	48.1%	589	1,240	48.3%	599
Other Paper	5,817	79.4%	4,622	5,888	80.2%	4,724
Other Plastics	4,133	49.2%	2,034	4,183	49.4%	2,068
Other Glass	1,225	45.3%	555	1,240	45.5%	564
Other Metals	765	73.5%	562	775	73.8%	572
Other Inorganics	230	74.2%	170	232	74.6%	173
Subtotal	18,065		11,203	18,283		11,424
WASTE FOR PRIVATE PROCESSING						
C&D Waste	20,178	75.0%	15,134	20,422	75.0%	15,316
Septage Waste	224	0.0%	0	227	0.0%	0
Subtotal	20,402		15,134	20,649		15,316
SUBTOTAL	96,948	68.5%	66,403	98,118	68.9%	67,646
MIXED WASTE COMPOSTING						
Mixed Waste Available (2)	25,276			25,140		
Quantity Composted (3)			4,456			4,268
Percent Recovery (4)		4.6%			4.4%	
Quantity of Residue (5)			3,342			3,201
WASTE STREAM SUMMARY						
Total Waste Landfilled (6)			24,162			24,073
Total Recycling Rate		73.1%			73.3%	
Waste Reduction Rate		10.0%			10.0%	
Total Reduction/Recycling Rate		83.1%			83.3%	

TABLE 3R-7
TOWN OF SOUTHAMPTON
ESTIMATED MATERIAL RECOVERY PROJECTIONS (1)

MATERIALS	2005 WASTE GENERATED (TONS)	2005 PERCENT RECOVERY	2005 MATERIALS RECOVERED (TONS)	2006 WASTE GENERATED (TONS)	2006 PERCENT RECOVERY	2006 MATERIALS RECOVERED (TONS)
MRF MATERIALS						
Newspaper	4,624	83.7%	3,869	4,675	84.5%	3,951
Cardboard	11,757	61.6%	7,245	11,886	62.2%	7,397
Clear Glass	2,978	68.1%	2,029	3,011	68.5%	2,062
Brown Glass	627	66.2%	415	634	66.8%	434
Green Glass	1,881	68.4%	1,286	1,902	69.1%	1,313
Steel Cans	2,508	49.1%	1,232	2,536	49.6%	1,258
Bimetal Cans	549	52.1%	286	555	52.6%	292
Aluminum Cans	705	47.7%	336	713	48.1%	343
Office Paper	3,997	69.4%	2,775	4,041	70.1%	2,833
HDPE Plastic	549	48.5%	266	555	48.7%	270
PET Plastic	78	47.2%	37	79	47.4%	38
Subtotal	30,254		19,776	30,586		20,181
LEAF/YARD WASTE COMPOSTING						
Leaf/Yard Waste	11,678	85.8%	10,024	11,807	86.7%	10,235
INDOOR ORGANIC COMPOSTING						
Contaminated Paper	6,584	56.5%	3,721	6,656	56.8%	3,780
Food	6,427	60.3%	3,874	6,498	60.6%	3,936
Other Organics	3,370	86.8%	2,925	3,407	87.7%	2,987
Subtotal	16,381		10,520	16,561		10,703
DIRECT TOWN MARKETING						
White Goods	1,411	90.8%	1,281	1,426	91.7%	1,308
Tires	157	94.7%	148	158	94.8%	150
Subtotal	1,568		1,430	1,585		1,459
OTHER WASTE RECYCLING						
Textiles	1,803	58.2%	1,050	1,822	58.5%	1,066
Wood Waste	2,978	57.7%	1,718	3,011	58.0%	1,746
Soil	1,254	48.6%	609	1,268	48.8%	619
Other Paper	5,957	80.6%	4,804	6,022	81.0%	4,881
Other Plastics	4,232	49.7%	2,103	4,279	49.9%	2,137
Other Glass	1,254	45.8%	574	1,268	46.0%	583
Other Metals	784	74.2%	582	792	74.6%	591
Other Inorganics	235	75.0%	176	238	75.3%	179
Subtotal	18,497		11,616	18,700		11,802
WASTE FOR PRIVATE PROCESSING						
C&D Waste	20,661	75.0%	15,496	20,888	75.0%	15,666
Septage Waste	230	0.0%	0	232	0.0%	0
Subtotal	20,891		15,496	21,120		15,666
SUBTOTAL	99,270	69.4%	68,861	100,359	69.8%	70,045
MIXED WASTE COMPOSTING						
Mixed Waste Available (2)	25,014			24,859		
Quantity Composted (3)			4,080			3,897
Percent Recovery (4)		4.1%			3.9%	
Quantity of Residue (5)			3,060			2,923
WASTE STREAM SUMMARY						
Total Waste Landfilled (6)			23,994			23,885
Total Recycling Rate		75.5%			73.7%	
Waste Reduction Rate		10.0%			10.0%	
Total Reduction/Recycling Rate		85.5%			83.7%	

TABLE 3R-7
TOWN OF SOUTHAMPTON
ESTIMATED MATERIAL RECOVERY PROJECTIONS (1)

MATERIALS	2007 WASTE GENERATED (TONS)	2007 PERCENT RECOVERY	2007 MATERIALS RECOVERED (TONS)	2008 WASTE GENERATED (TONS)	2008 PERCENT RECOVERY	2008 MATERIALS RECOVERED (TONS)
MRF MATERIALS						
Newspaper	4,727	85.4%	4,034	4,779	86.2%	4,120
Cardboard	12,017	62.9%	7,554	12,149	63.5%	7,713
Clear Glass	3,044	68.8%	2,095	3,078	69.2%	2,128
Brown Glass	641	67.5%	433	648	68.2%	442
Green Glass	1,923	69.4%	1,335	1,944	69.8%	1,356
Steel Cans	2,564	50.1%	1,284	2,592	50.6%	1,312
Bimetal Cans	561	53.2%	298	567	53.7%	304
Aluminum Cans	721	48.6%	351	729	49.1%	358
Office Paper	4,086	70.8%	2,893	4,131	71.5%	2,954
HDPE Plastic	561	49.0%	275	567	49.2%	279
PET Plastic	80	47.7%	38	81	47.9%	39
Subtotal	30,924		20,589	31,264		21,005
LEAF/YARD WASTE COMPOSTING						
Leaf/Yard Waste	11,937	87.6%	10,451	12,068	88.4%	10,672
INDOOR ORGANIC COMPOSTING						
Contaminated Paper	6,729	57.1%	3,841	6,803	57.4%	3,903
Food	6,569	60.9%	3,999	6,642	61.2%	4,064
Other Organics	3,445	88.5%	3,050	3,483	89.4%	3,114
Subtotal	16,744		10,890	16,928		11,080
DIRECT TOWN MARKETING						
White Goods	1,442	92.6%	1,336	1,458	93.6%	1,364
Tires	160	94.9%	152	162	95.0%	154
Subtotal	1,602		1,488	1,620		1,518
OTHER WASTE RECYCLING						
Textiles	1,843	58.8%	1,084	1,863	59.1%	1,101
Wood Waste	3,044	58.3%	1,774	3,078	58.6%	1,803
Soil	1,282	49.0%	629	1,296	49.3%	639
Other Paper	6,089	81.5%	4,959	6,156	81.9%	5,039
Other Plastics	4,326	50.2%	2,171	4,374	50.4%	2,206
Other Glass	1,282	46.2%	592	1,296	46.4%	602
Other Metals	801	74.9%	600	810	75.3%	610
Other Inorganics	240	75.7%	182	243	76.1%	185
Subtotal	18,907		11,992	19,115		12,184
WASTE FOR PRIVATE PROCESSING						
C&D Waste	21,118	75.0%	15,839	21,351	75.0%	16,013
Septage Waste	235	0.0%	0	237	0.0%	0
Subtotal	21,353		15,839	21,588		16,013
SUBTOTAL	101,466	70.2%	71,249	102,582	70.6%	72,472
MIXED WASTE COMPOSTING						
Mixed Waste Available (2)	24,703			24,535		
Quantity Composted (3)			3,710			3,520
Percent Recovery (4)		3.7%			3.4%	
Quantity of Residue (5)			2,782			2,640
WASTE STREAM SUMMARY						
Total Waste Landfilled (6)			23,775			23,655
Total Recycling Rate		73.9%			74.1%	
Waste Reduction Rate		10.0%			10.0%	
Total Reduction/Recycling Rate		83.9%			84.1%	

TABLE 3R-7
TOWN OF SOUTHAMPTON
ESTIMATED MATERIAL RECOVERY PROJECTIONS (1)

MATERIALS	2009 WASTE GENERATED (TONS)	2009 PERCENT RECOVERY	2009 MATERIALS RECOVERED (TONS)	2010 WASTE GENERATED (TONS)	2010 PERCENT RECOVERY	2010 MATERIALS RECOVERED (TONS)
MRF MATERIALS						
Newspaper	4,831	87.1%	4,206	4,884	87.9%	4,295
Cardboard	12,282	64.1%	7,876	12,418	64.8%	8,042
Clear Glass	3,112	69.5%	2,163	3,146	69.8%	2,197
Brown Glass	655	68.9%	451	662	69.5%	461
Green Glass	1,965	70.1%	1,378	1,987	70.5%	1,400
Steel Cans	2,620	51.1%	1,339	2,649	51.6%	1,367
Bimetal Cans	573	54.2%	311	579	54.8%	317
Aluminum Cans	737	49.6%	366	745	50.1%	373
Office Paper	4,176	72.2%	3,017	4,222	73.0%	3,080
HDPE Plastic	573	49.5%	284	579	49.7%	288
PET Plastic	82	48.2%	39	83	48.4%	40
Subtotal	31,607		21,429	31,955		21,862
LEAF/YARD WASTE COMPOSTING						
Leaf/Yard Waste	12,200	89.3%	10,897	12,335	90.2%	11,127
INDOOR ORGANIC COMPOSTING						
Contaminated Paper	6,878	57.6%	3,965	6,954	57.9%	4,029
Food	6,714	61.5%	4,129	6,788	61.8%	4,195
Other Organics	3,521	90.3%	3,180	3,560	91.2%	3,247
Subtotal	17,113		11,274	17,302		11,471
DIRECT TOWN MARKETING						
White Goods	1,474	94.5%	1,393	1,490	95.5%	1,422
Tires	164	95.1%	156	166	95.2%	158
Subtotal	1,638		1,549	1,656		1,580
OTHER WASTE RECYCLING						
Textiles	1,883	59.4%	1,119	1,904	59.7%	1,137
Wood Waste	3,112	58.9%	1,831	3,146	59.2%	1,861
Soil	1,310	49.5%	649	1,325	49.8%	659
Other Paper	6,223	82.3%	5,120	6,292	82.7%	5,202
Other Plastics	4,422	50.7%	2,241	4,470	50.9%	2,277
Other Glass	1,310	46.7%	611	1,325	46.9%	621
Other Metals	819	75.7%	620	828	76.1%	630
Other Inorganics	246	76.5%	188	248	76.9%	191
Subtotal	19,324		12,379	19,537		12,578
WASTE FOR PRIVATE PROCESSING						
C&D Waste	21,585	75.0%	16,189	21,823	75.0%	16,367
Septage Waste	240	0.0%	0	243	0.0%	0
Subtotal	21,825		16,189	22,065		16,367
SUBTOTAL	103,707	71.1%	73,716	104,850	71.5%	74,985
MIXED WASTE COMPOSTING						
Mixed Waste Available (2)	24,355			24,167		
Quantity Composted (3)			3,326			3,129
Percent Recovery (4)		3.2%			3.0%	
Quantity of Residue (5)			2,495			2,347
WASTE STREAM SUMMARY						
Total Waste Landfilled (6)			23,524			23,384
Total Recycling Rate		74.3%			74.5%	
Waste Reduction Rate		10.0%			10.0%	
Total Reduction/Recycling Rate		84.3%			84.5%	

MATERIALS MARKET SURVEY FOR OIL

NAME	MATERIAL QUALITY REQUIREMENTS	PRICE($)	TRANSPORTATION	CONTRACT PREFERENCE	OTHER
AB Oil Service Smithtown, NY	Waste oil, transmission fluid; no thinner or non-automotive oils Anti-freeze	Charge $0.10 per gallon during summer otherwise no charge; $40.00 per drum	Pumper truck	long-term	Level of contamination affects recyclability Minimum delivery of 250 gallons May supply drums if needed
Certified Waste Oil Garden City, NY	Engine oil, transmission fluid, hydraulic oil, gear oil	No charge for high quality deliveries; free pick-up of 500 gallons; $25.00-$50.00 for smaller pick-ups	Pumper truck	short-term	Effort should be made to keep waste oil as clean as possible Minimum delivery of 500 gallons May provide pick-up
Sid Waste Oil Jamaica, NY	Waste oil, transmission fluid, hydraulic oil, lubricating oil	No charge	Pumper truck	long-term	May install tanks and provide pumping and hauling No antifreeze
General Waste Oil Wyandanch, NY	Waste oil	Charge $15.00 per drum or $0.10 per gallon if pumped	Pumper truck, load drums onto flatbed	long-term	May provide tanks and pick-up Prefer at least a pick-up of 275 gallons
Akba Waste Oil Bethpage, NY	Waste motor oil	Charge $0.10 per gallon	Pumper truck		Delivers to refinery/processor Prefer a pick-up of at least two 275 gallon tanks No cleaners or paint thinner
RD Waste Oil Long Island City, NY	Waste oil Anti-freeze	Charge $35.00-$50.00 per 550 gallon tank; no municipal charges; $50.00 per 55 gallon drum	Pumper truck	long-term	No charge for municipal deliveries over 550 gallons and for pick-ups of greater than 275 gallons
Buckner Waste Oil New Windsor, NY	Waste oil	Charge $0.20 per gallon	Pumper truck		Requires a pick-up of at least 2000 gallons

Source: Malcolm Pirnie Inc. Market Survey .

MATERIALS MARKET SURVEY FOR WOOD

NAME	MATERIAL QUALITY REQUIREMENTS	PRICE($/CY)	TRANSPORTATION	CONTRACT PREFERENCE	OTHER
Delisa Pallet Corp. Newark, NJ	Broken pallets, clean wood	variable	Truck	short-term	May provide flatbed trailers and pick-up 150 cy minimum
Dauman Pallet Corp. Linden, NJ	Stumps, yard wood (baled or loose)	(6.00)	Truck	short-term	Approved NJDEP facility Make mulch with chipped wood May provide trailers and dumpsters and pick-up for 30 or 40 yard full containers
Star Recycling Woodside, NY	Clean (loose or packed), no yard waste	variable	N/A	long-term	May provide storage containers and transportation
Hubbard Sand and Gravel Bayshore, NY	No trees	(7.00)	Truck	short-term	Minimum charge of $25.00
BQE Services Brooklyn, NY	Clean, no yard waste	(7.50)	Truck and barge	long-term	May provide storage containers and pick-up

Source: Malcolm Pirnie Inc. Market Survey.

MATERIALS MARKET SURVEY FOR METALS

NAME	MATERIAL QUALITY REQUIREMENTS	PRICE($/TON)	TRANSPORTATION	CONTRACT PREFERENCE	OTHER
DIMATTEO SALVAGE CO. WEST BABYLON, NY	ALUMINUM CANS, LOOSE	400.00	TRUCK	LONG-TERM	MAY PROVIDE TRANSPORTATION, EQUIPMENT AND STORAGE CONTAINERS AT A NEGOITABLE PRICE
	BRASS	VARIES			
	COPPER	VARIES			
	OTHER NON-FERROUS METALS	VARIES			
SCHIOPPO CORP. STATEN ISLAND, NY	ALUMINUM, LOOSE	640.00	TRUCK	SHORT-TERM	MAY PROVIDE ROLL-OFF CONTAINERS AND PICK-UP FOR A NEGOITABLE PRICE
	BRASS-CLEAN	900.00-1100.00			
	COPPER-CLEAN	1300.00-1500.00			
	MIXED STEEL	40.00-60.00			
	GALVANIZED(LIGHT IRON)	0.00			
COLETTA RECYCLING CORP.	STEEL, LOOSE (PICKED-UP)	VARIES	TRUCK	LONG-TERM	MAY PROVIDE TRANSPORTATION, AND STORAGE CONTAINERS AT A NEGOITABLE PRICE
	STEEL, #1 PREPARED (PICKED-UP)	60.00			
	STEEL, #2 PREPARED (PICKED-UP)	80.00			
	CAST IRON (PICKED-UP)	78.00			
	ALUMINUM SIDING ALONE	810.00			
	ALUMINUM CANS, BALED	760.00			
	ALUMINUM CANS, LOOSE	700.00			
	BRASS	SPOT MARKET			
	COPPER	SPOT MARKET			
NEW YORK CITY MRF NEW YORK, NY	ALUMINUM FOIL, BALED	200.00-400.00	N/A	NEGOITABLE	PREFER UNCONTAMINATED, CLEAN CANS MAY PROVIDE TRANSPORTATION AT A NEGOITABLE PRICE
	ALUMINUM CANS, BALED	900.00			
	TIN CANS	62.00			
BOULDER RESOURCES NEW YORK, NY	ALUMINUM CANS, LOOSE	600.00-700.00	TRUCK	NEGOITABLE	MAY PROVIDE TRANSPORTATION, EQUIPMENT AND STORAGE AT A NEGOITABLE PRICE
	ALUMINUM CANS, BALED	900.00-1000.00			
	TIN CANS, LOOSE	20.00			
	TIN CANS, 5' BALE	62.00			
	WHITE GOODS, LOOSE, NO CAPACITORS	30.00			

SOURCE : MALCOLM PIRNIE INC. MARKET SURVEY .

Material Market Survey For Textiles

NAME	MATERIAL QUALITY REQUIREMENTS	PRICE ($/Ton)	TRANSPORTATION	CONTRACT PREFERENCE	OTHER
Mill Sanitary Wiping Cloth Bronx, NY	Prefer baled; loose bags or bundled	60 - 100	Truck	short-term	Deliveries should be between 5000 and 6000 lbs.; no oil or greased cloth May provide transportation
Scott Cynaman Textiles Inc. Brooklyn, NY	Baled, loose, little contamination	40 - 60	Truck	long-term	10000 lb. minimum May provide containers in exchange for a volume guarantee
Atlantic Wool Waste Co. Brooklyn, NY	All natural fiber cut-offs, no post consumer	800	N/A	long-term	1000 lb. minimum
North Atlantic Int.,Bronx, NY	Baled second hand clothing,no stockings, handbags,shoes,belts,plastic jackets, paired socks	140 - 170	Truck	N/A	
Philadelphia Rag Co. Philadelphia, Pa.	Baled second hand clothing,no stockings, handbags,shoes,belts,plastic jackets, no statues or paintings,paired socks	160	Truck	N/A	

Source: Malcolm Pirnie Inc. Market Survey .

MATERIALS MARKET SURVEY FOR NEWSPAPER

NAME	MATERIAL QUALITY REQUIREMENTS	PRICE($/TON)	TRANSPORTATION	CONTRACT PREFERENCE	OTHER
DIMATTEO SALVAGE COMPANY,W.BABYLON, NY	BALED OR LOOSE	AS PER FIBRE MARKET NEWS	TRUCK	LONG TERM	MAY PROVIDE EQUIPMENT, TRANSPORT-ATION AND CONTAINERS FOR A COST
HARMON ASSOCIATION CORPORATION WESTBURY, NY	BALED	DEPENDS ON CONAMINANT LEVEL	TRUCK	LONG TERM	MAY PROVIDE EQUIPMENT AND TRANSPORTATION FOR A COST
FILBERTO & SONS INC.,MASPETH,NY	BALED OR LOOSE	WILL COST TO HAVE REMOVED	TRUCK	SHORT TERM	MAY PROVIDE EQUIPMENT, TRANSPORT-ATION AND CONTAINERS FOR A COST
BENEDETTO INC. NEW YORK, NY	BALED, CLEAN, 48000 lb. PER CONTAINER LOOSE, CLEAN	15 - 16 0	TRUCK, MAYBE RAIL	SHORT TERM	FEELS MARKET WILL IMPROVE
RECYCLING INDUSTRIES MAMARONECK, NY	BALED ,EXPORT DENSITY(53,000 lb PER TRAILER),GRADE 7 NEWS	22(PICKED-UP)	TRUCK	LONG TERM/ SPOT MKT.	MAY PROVIDE CONTAINERS
RECYCLING SPECIALISTS JERSEY CITY, NY	PREFERS BALED, MINIMAL CONTAMINATION	15	TRUCK	LONG TERM	MAY PROVIDE TRANSPORTATION,AND CONTAINERS FOR A COST,MAY HELP WITH EDUCATION PROGRAM
V. PONTE & SONS NEW YORK, NY	BALED ,LOW GRADES ARE LESS REVENUE	VARIES	TRUCK, RAIL	LONG TERM	WILL PROVIDE TRANSPORTATION
JET PAPER STOCK CENTRAL ISLIP,NY	LOOSE, CLEAN,GRADE 6 NEWS	5	TRUCK	LONG TERM	MAY PROVIDE TRANSPORTATION,AND CONTAINERS FOR A COST
IPF RECYCLING CORP GARDEN CITY PARK,NY	BALED ,LOW GRADE NEWS BALED ,CLEAN NEWS	5 - 10 20	TRUCK	LONG TERM	MAY PROVIDE CONTAINERS

SOURCE : MALCOLM PIRNIE INC. MARKET SURVEY.

MATERIALS MARKET SURVEY FOR PLASTICS

NAME	MATERIAL QUALITY REQUIREMENTS	PRICE ($/TON)	TRANSPORTATION	CONTRACT PREFERENCE	OTHER
UNION CARBIDE BOUND BROOK, NJ	CLEAR PET GREEN PET MIXED COLOR PET HDPE (MILK CONTAINERS) MIXED COLOR HDPE PET/HDPE MIXED	120.00-200.00 0.00-140.00 80.00-160.00 160.00-220.00 100.00-160.00 50.00-110.00	TRUCK	LONG OR SHORT-TERM	PRICE DEPENDS UPON CONTRACT, MAY PROVIDE TRANSPORTATION AT NO CHARGE, PREFER BALED
DEBCO PLASTICS FREEPORT, NY	INDUSTRIAL WASTE ONLY NO POST CONSUMER	N/A	N/A	NEGOITABLE	MAY PROVIDE TRANSPORTATION AT ADDITIONAL CHARGE
NEW YORK CITY MRF NEW YORK, NY	PET HDPE	200.00 160.00	TRUCK	NEGOITABLE	PREFER BALED, MAY PROVIDE PICK-UP AT A NEGOITABLE PRICE
AAA POLYMER INC. BROOKLYN,NY	HDPE-SEPARATED LDPE-SEPARATED NO POST CONSUMER	CHANGES DAILY	TRUCK	N/A	MAY PROVIDE TRANSPORTATION AND CONTAINERS AT NO CHARGE
E.G. PLASTIC BROOKLYN,NY	PVC-CLEAN PET-CLEAN	20.00-300.00 20.00-300.00	TRUCK, RAIL	NEGOITABLE	MAY PROVIDE TRANSPORTATION AT AN ADDITIONAL CHARGE
IBERIA PLAST. RECYC. EAST FARMINGDALE, NY	PVC POLY-STYRENE NO POST CONSUMER	40.00-60.00 600.00	TRUCK	NEGOITABLE	MAY PROVIDE GAYLORD BOXES AND PICK-UP

SOURCE : MALCOLM PIRNIE INC. MARKET SURVEY .

MATERIALS MARKET SURVEY FOR PLASTICS

NAME	MATERIAL QUALITY REQUIREMENTS	PRICE ($/TON)	TRANSPORTATION	CONTRACT PREFERENCE	OTHER
NICON PLASTICS,INC. LONG ISLAND CITY, NY	POST-CONSUMER SODA BOTTLES, CLEAN AND BALED	160.00	TRUCK	LONG-TERM	MAY PROVIDE EQUIPMENT FOR BALING AND TRANSPORTATION AT A NEGOITABLE PRICE
PET POLYMERS ROOSEVELT, NY	ANY MATERIAL THAT IS CLEAN AND SEPARATED BY RESIN	VARIES	TRUCK	LONG-TERM	WILLING TO OPERATE PROCESSING FACILITY FOR A NEGOITABLE PRICE
R2B2 BRONX, NY	PET-NO CAPS HDPE PVC	100.00-200.00 120.00-200.00 40.00-100.00	TRUCK	N/A	NO SERVICES PROVIDED
PLASTIC RECYCLERS, INC. WYANDANCH, NY	ANY TYPE-SEPARATED AND BALED	VARIES	TRUCK	N/A	CURRENTLY NOT ACCEPTING MATERIALS DUE TO REDUCTION IN PLASTICS LUMBER MARKET
BROWNING-FERRIS WESTBURY, NY	ANY TYPE-BALED	VARIES	N/A	N/A	WORKED FOR NORTH HEMPSTEAD FOR PAST THREE YEARS
BOULDER RESOURCES NEW YORK, NY	HDPE PET LDPE PVC MIXED PLASTIC (for further separation)	0.00-220.00 0.00-220.00 0.00-220.00 0.00-220.00 N/A	TRUCK	NEGOITABLE	MAY PROVIDE EQUIPMENT, TRANSPORTATION AND STORAGE AT A NEGOITABLE PRICE

SOURCE : MALCOLM PIRNIE INC. MARKET SURVEY .

MATERIALS MARKET SURVEY FOR GLASS

NAME	MATERIAL QUALITY REQUIREMENTS	PRICE ($/TON)	TRANSPORTATION	CONTRACT PREFERENCE	OTHER
RECYCLING INDUSTRIES MAMARONECK, NY	CLEAR- NO RINGS,CAPS OR CERAMICS COLORED- NO RINGS,CAPS OR CERAMICS	SPOT MARKET	TRUCK	LONG-TERM	MAY PROVIDE TRANSPORTATION AND CONTAINERS AT NO EXTRA CHARGE
OMNI TECH. SERVICES UNIONDALE, NY	MIXED GLASS W/ PLASTICS AND METALS COLOR SEPARATED,MINIMAL PROCESSING, PARTIALLY BROKEN	(26.00) VARIES	TRUCK	LONG-TERM	MAY PROVIDE TRANSPORTATION, CHARGE WILL VARY
EWG GLASS RECYCLING JAMAICA, NY	FLINT AMBER GREEN MIXED	25.00 20.00 10.00 (20.00)	TRUCK	LONG-TERM	MAY PROVIDE TRANSPORTATION AT $5/TON MAY PROVIDE CONTAINERS AT $100/PER MONTH
NEW YORK CITY MRF NEW YORK, NY	AMBER, PROCESSED TO FURNACE READY CULLET GREEN, PROCESSED TO FURNACE READY CULLET FLINT, PROCESSED TO FURNACE READY CULLET	20.00-40.00 20.00-40.00 55.00	TRUCK	LONG OR SHORT-TERM	MAY PROVIDE PICK-UP AT A NEGOITABLE PRICE
BOULDER RESOURCES NEW YORK, NY	MIXED GLASS GREEN BROWN CLEAR	VARIES 10.00 20.00 30.00	TRUCK	NEGOITABLE	MAY PROVIDE EQUIPMENT, TRANSPORTATION, AND STORAGE AT A NEGOITABLE PRICE

SOURCE : MALCOLM PIRNIE INC. MARKET SURVEY .

MATERIALS MARKET SURVEY FOR VARIOUS PAPER GRADES

NAME	MATERIAL QUALITY REQUIREMENTS	PRICE($/TON)	TRANSPORTATION	CONTRACT PREFERENCE	OTHER
ILBERTO & SONS , NC., MASPETH ,NY	BALED OR LOOSE VARIOUS GRADES	1 - 60	TRUCK	SHORT TERM	MAY PROVIDE EQUIPMENT, TRANSPORT-ATION AND CONTAINERS FOR A COST
IAPID RECYCLING PAPER CORP.,BROOKLYN, NY	BOX BOARD, HAMPERS, CARTS OFFICE WASTE	(50) VARIES	TRUCK	LONG TERM	
ENEDETTO INC. EW YORK ,NY	BALED, MIXED OFFICE PAPER LOOSE, CLEAN	15 - 20 20	TRUCK, MAYBE RAIL	SHORT TERM	FEELS MARKET WILL IMPROVE
ECYCLING INDUSTRIES AMARONECK ,NY	OFFICE PAPER, LOOSE, VARIOUS GRADES	10 - 30(PICKED-UP)	TRUCK	LONG TERM/ SPOT MRKT.	
ECYCLING SPECIALISTS ERSEY CITY , NY	OFFICE PAPER,BALED, MINIMAL CONTAMINATION, VARIOUS GRADES	20 - 30	TRUCK	LONG TERM	MAY PROVIDE TRANSPORTATION,AND CONTAINERS FOR A COST,MAY HELP WITH AN EDUCATION PROGRAM
TLAS PAPER EW YORK , NY	OFFICE PAPER, VARIOUS HIGH QUALITY GRADES	95 - 230	TRUCK	LONG TERM	MAY PROVIDE EQUIPMENT AND TRANSPORTATION FOR A COST
/. PONTE & SONS EW YORK , NY	BALED ,LOW QUALITY IS LESS REVENUE	VARIES	TRUCK, RAIL	LONG TERM	MAY PROVIDE TRANSPORTATION
PEX WASTE PAPER EW YORK , NY	OFFICE PAPER, VARIOUS GRADES, BALED OR LOOSE COMPUTER PAPER	70 - 120 100(APPROX.)	TRUCK	ANY TYPE	MAY PROVIDE BINS AND STORAGE CONTAINERS FREE IF MORE THAN ONE TON/WEEK

MATERIALS MARKET SURVEY FOR VARIOUS PAPER GRADES

NAME	MATERIAL QUALITY REQUIREMENTS	PRICE($/TON)	TRANSPORTATION	CONTRACT PREFERENCE	OTHER
GAGLIANO RECYCLING CO. NEW YORK , NY	OFFICE PAPER, VARIOUS GRADES, BALED OR LOOSE	10 - 30	TRUCK	SPOT MRKT.	
PETROCO INC. NEW YORK , NY	BALED, WHITE PAPER ONLY	200(PICKED-UP)	TRUCK	ANY TYPE	MAY PROVIDE 40 ft. STORAGE CONTAINERS,MIN. OF 20 TONS
SECURITY PAPER RECYCLING JAMAICA , NY	MIXED OFFICE PAPER, LOOSE OR BALED	30 - 35	TRUCK	LONG TERM	MAY PROVIDE TRANSPORTATION AND CONTAINERS
BROOKHAVEN RECYCLING & WASTE INC. PATCHOGUE , NY	OFFICE PAPER, VARIOUS GRADES, BALED OR BUNDLED	10 - 30	TRUCK	LONG TERM	
WESTBURY PAPER CO. WESTBURY, NY	HIGH GRADES OFFICE PAPER, LOOSE OR BALED	VARIES	TRUCK	N/A	REPORTS THAT SEVERAL MIXED PAPER MILLS ARE BEING PLANNED. SUGGESTS NOT RECYCLING MIXED PAPER AT THIS TIME.
	MIXED POST-CONSUMER PAPER, LOOSE	(50)			
	CHIP BOARD ONLY(PAPER BOARD),LOOS	(40)			

SOURCE : MALCOLM PIRNIE INC. MARKET SURVEY .

MATERIALS MARKET SURVEY FOR BATTERIES

NAME	MATERIAL QUALITY REQUIREMENTS	PRICE($)	TRANSPORTATION	CONTRACT PREFERENCE	OTHER
MERCURY REFINING ALBANY, NY	MIXED HOUSEHOLD BATTERIES	VARIABLE	TRUCK	SHORT-TERM	REVENUE DEPENDS ON PERCENT OF MIX THAT IS RECOVERABLE
R.B. SCRAP IRON	AUTO BATTERIES ONLY ON A SKID, 3 HIGH WITH CARDBOARD IN BETWEEN EACH BATTERY. BOUND.	.04-.05/LB	TRUCK	NEGOITABLE	MAY PROVIDE CONTAINERS AND TRANSPORTATION
RSR CORPORATION DALLAS, TX	AUTO BATTERIES ONLY, LOOSE OR ON A SKID, 3 HIGH W/CARDBOARD IN BETWEEN EACH BATTERY. BOUND.	.08-.085/LB (FULL TRAILER)	TRUCK	NEGOITABLE	MAY PROVIDE TRANSPORTATION
BROOKFIELD METAL CO.	AUTO BATTERIES ONLY, LOOSE OR ON PALLETS	1.25-1.50 (PER BATTERY)	TRUCK	NEGOITABLE	MAY PROVIDE TRANSPORTATION
PASCAP CO.	AUTO BATTERIES ONLY ON A SKID, 3 HIGH WITH CARDBOARD IN BETWEEN EACH BATTERY. BOUND. AUTO BATTERIES ONLY, LOOSE	.08/LB (FULL TRAILER) .06/LB (FULL TRAILER)	TRUCK	NEGOITABLE	MAY PROVIDE TRANSPORTATION
A. SCRAP DEALERS INC.	AUTO BATTERIES ONLY ON A SKID, 3 HIGH WITH CARDBOARD IN BETWEEN EACH BATTERY. BOUND. AUTO BATTERIES ONLY, LOOSE	2.50 (PER BATTERY) OR .07/LB 2.00 (PER BATTERY)	TRUCK	NEGOITABLE	MAY PROVIDE TRANSPORTATION
SCHIOPPO CORP. STATEN ISLAND, NY	AUTO BATTERIES ONLY ON A SKID, 3 HIGH WITH CARDBOARD IN BETWEEN EACH BATTERY. BOUND.	1.15 EACH OR 3.25/LB (FULL TRAILER)	TRUCK	SHORT-TERM	MAY PROVIDE TRANSPORTATION AND ROLL-OFF CONTAINERS

SOURCE : MALCOLM PIRNIE INC. MARKET SURVEY .

MATERIALS MARKET SURVEY FOR C & D DEBRIS
AND BULKY ITEMS

NAME	MATERIAL QUALITY REQUIREMENTS	PRICE ($)	TRANSPORTATION	CONTRACT PREFERENCE	OTHER
VIGLIOTTI RECYCLING	MIXED C&D WASTE	-30 / TON	TRUCK	N/A	INTERESTED IN SERVING TOWN
STAR RECYCLING	MIXED C&D WASTE	-15 TO -30 PER CY	TRUCK	MAYBE	MAY PROVIDE CONTAINERS AND TRANSPORTATION
COUSINS METAL INDUSTRY	MIXED C&D WASTE (NO RUBBLE)	VARIABLE	TRUCK	N/A	
	WHITE GOODS	N/A			
	FURNITURE, RUGS ETC.	N/A			

SOURCE : MALCOLM PIRNIE INC. MARKET SURVEY .

MATERIALS MARKET SURVEY FOR OCC

NAME	MATERIAL QUALITY REQUIREMENTS	PRICE($/TON)	TRANSPORTATION	CONTRACT PREFERENCE	OTHER
IMATTEO SALVAGE OMPANY, W.BABYLON,NY	BALED OR LOOSE	AS PER FIBRE MARKET NEWS	TRUCK	LONG TERM	MAY PROVIDE EQUIPMENT, TRANSPORT-ATION AND CONTAINERS FOR A COST
ARMON ASSOCIATION ORPORATION /ESTBURY , NY	BALED	DEPENDS ON CONAMINANT LEVEL	TRUCK	LONG TERM	MAY PROVIDE EQUIPMENT AND TRANSPORTATION FOR A COST
.B. FIBERS INC.	BALED, NO WAX PAPER OR GARBAGE	35(PICKED-UP)	TRUCK	LONG/SHORT TERM	MAY PROVIDE EQUIPMENT, AND CON--TAINERS FOR A COST
ILBERTO & SONS IC.,MASPETH, NY	BALED OR LOOSE	N/A	TRUCK	SHORT TERM	MAY PROVIDE EQUIPMENT, TRANSPORT-ATION AND CONTAINERS FOR A COST
ENEDETTO INC. EW YORK , NY	BALED, CLEAN, 48000 lb. PER CONTAINER LOOSE, CLEAN	40 20	TRUCK, MAYBE RAIL	SHORT TERM	FEELS MARKET WILL IMPROVE
ECYCLING INDUSTRIES IAMARONECK , NY	BALED ,EXPORT DENSITY(53,000 lb - PER TRAILER),GRADE 7 NEWS	38(PICKED-UP)	TRUCK	LONG TERM/ SPOT MKT.	
ECYCLING SPECIALISTS ERSEY CITY , NY	PREFERS BALED, MINIMAL CONTAMINATION	0	TRUCK	LONG TERM	MAY PROVIDE TRANSPORTATION,AND CONTAINERS FOR A COST,MAY HELP WITH AN EDUCATION PROGRAM
TLAS PAPER IEW YORK , NY	N/A	N/A	TRUCK	LONG TERM	MAY PROVIDE EQUIPMENT AND TRANSPORTATION FOR A COST
. PONTE & SONS IEW YORK , NY	BALED ,LOW QUALITY IS LESS REVENUE	VARIES	TRUCK, RAIL	LONG TERM	MAY PROVIDE TRANSPORTATION
ET PAPER STOCK ENTRAL ISLIP, NY	LOOSE, CLEAN	10	TRUCK	LONG TERM	MAY PROVIDE TRANSPORTATION,AND CONTAINERS FOR A COST,WILL TAKE BALED OCC ALSO
F RECYCLING CORP ARDEN CITY PARK, NY	LOOSE	20	TRUCK	LONG TERM	MAY PROVIDE CONTAINERS, WILL TAKE BALED OCC ALSO

OURCE : MALCOLM PIRNIE INC. MARKET SURVEYS .

MATERIAL MARKET SURVEY FOR TIRES

NAME	MATERIAL QUALITY REQUIREMENTS	PRICE ($)	TRANSPORTATION	CONTRACT PREFERENCE	OTHER
The Tire Pond North Haven, CT	Whole tires (w/rims),tubes, truck tire flaps, other rubber tires	17.50 per cy 80.00 per ton	truck	short-term	Adding shredding system to produce granulated rubber; Provide containers at no charge
Pol-X Inc. Hopelawn, NJ	Passenger tires only, good inner casings, no punctures, rejects up to 90 % of tires	varies	truck	N/A	Grind off old rubber to remold new tires Very high standards
Metropilitan Rubber Products New York, NY	Passenger tires (w\ or w\out rim), truck tires (w\out rims)	1.10 per tire	truck	short-term	Reprocessed into rubber products; Grind rubber into half-inch product; Provide containers at a nominal cost
New York Tire Recycling Kings Park, NY	Passenger tires (w\ or w\out rim), inner tubes, truck tires	10.00 per cy 95.00 per ton	truck or rail	short-term	Chip material to a one-inch product
Coletta Recycling Corp. Far Rockaway, NY	Passenger tires only (no rims)	76.00 per ton	truck	long-term	Tires are processed upon delivery; Reports that facility is exempt from DEC permit Can provide containers if needed Less than 500 tires at one time and only by appointment

Source: Malcolm Pirnie Inc. Market Survey .

APPENDIX R-J

TOWN CODE

Chapter 205

LANDFILLS, TRANSFER STATIONS AND SCAVENGER WASTE

ARTICLE I
Sanitary Landfill Stations and Garbage Transfer Stations

§ 205-1. Applicability.

§ 205-2. Definitions.

§ 205-3. Regulations.

§ 205-4. Permits for garbage vehicles; permit fees.

§ 205-5. Usage fees.

§ 205-6. Removal of surplus fill.

§ 205-7. Penalties for offenses.

ARTICLE II
Scavenger Waste

§ 205-8. Definitions.

§ 205-9. On-site sewage disposal systems.

§ 205-10. Transportation permit required; fee; rules and regulations.

§ 205-11. Construction or alteration permit for on-site sewage disposal system; fee.

§ 205-12. Construction standards for on-site sewage disposal systems.

§ 205-13. Inspections.

§ 205-14. Fees for scavenger waste.

§ 205-15. Penalties for offenses.

[HISTORY: Adopted by the Town Board of the Town of Southampton 7-9-85 as L.L. No. 4-1985. Section 205-2 added and §§ 205-3Q, 205-4B(1), 205-7, 205-10B and 205-15A amended at time of adoption of Code; see Ch. 1, General Provisions, Art. I. Other amendments noted where applicable.]

GENERAL REFERENCES

Junkyards and junk dealers — See Ch. 199.
Littering and handbills — See Ch. 211.
Protection of natural resources — See Ch. 229.

ARTICLE I
Sanitary Landfill Stations and Garbage Transfer Stations
[Amended 2-11-86 by L.L. No. 3-1986; 4-22-86 by L.L. No. 6-1986; 5-12-87 by L.L. No. 3-1987]

§ 205-1. Applicability.

The rules and regulations of this chapter shall apply to all town disposal areas, including sanitary landfill stations and garbage transfer stations.

§ 205-2. Definitions. [Added 4-25-89 by L.L. No. 10-1989]

As used in this Article, the following terms shall have the meanings indicated:

CANS — Containers comprised of aluminum, tin, steel or a combination thereof which contain or formerly contained only food and/or beverage substances. [Added 12-12-1989 by L.L. No. 24-1989]

CARDBOARD — All corrugated cardboard normally used for packing, mailing, shipping or containerizing goods, merchandise or other material, but shall not mean wax-coated or soiled cardboard. [Added 12-12-1989 by L.L. No. 24-1989]

COMMERCIAL GARBAGE HAULER — A vehicle utilized in the business of collecting and transporting solid waste of any kind. **[Added 7-10-1990 by L.L. No. 19-1990; amended 6-11-1991 by L.L. No. 9-1991]**

GLASS — All clear (flint), green and brown (amber) colored glass containers. "Glass" shall not mean wired glass, crystal, ceramics and plate, window, laminated or mirrored glass. **[Added 12-12-1989 by L.L. No. 24-1989]**

HAZARDOUS WASTE **[Added 7-10-1990 by L.L. No. 19-1990]**:

A. A solid waste or a combination of solid wastes which, because of its quantity, concentration or physical, chemical or infectious characteristics, may:

   (1) Cause or significantly contribute to an increase in mortality or an increase in serious irreversible or incapacitating reversible illness; or

   (2) Pose a substantial present or potential hazard to human health or the environment when improperly treated, stored, transported or disposed of or otherwise managed.

B. Includes but is not limited to explosives, hazardous radioactive materials, toxic substances and those substances which the administrator of the Federal Environmental Protection Agency has caused to be included in the listing of hazardous waste promulgated by said Agency pursuant to 42 U.S.C.A. § 6921(b).

METAL — Any of the various opaque, fusible, ductile and typically lustrous substances that are good conductors of electricity and heat, form cations by loss of electrons and yield basic oxides and hydroxides, including any alloys or combinations thereof. **[Added 12-12-1989 by L.L. No. 24-1989]**

NEWSPAPER — Includes newsprint and all newspaper and newspaper advertisements, supplements, comics and enclosures.

NONRESIDENTIAL SELF-HAULER — A vehicle utilized in the transporting of solid waste originating from a building or parcel of land with four (4) or more dwelling units or any single business or single industrial use. **[Added 6-11-1991 by L.L. No. 9-1991]**

PAPER — All high-grade office paper, fine paper, bond paper, office paper, xerographic paper, mimeo paper, duplication paper, magazines, paperback books, school paper, catalogs, computer paper and similar cellulosic material, but shall not mean newspapers, wax paper, plastic- or foil-coated paper, styrofoam, wax-coated food and beverage containers, carbon paper, blueprint paper, food-contaminated paper, soiled paper and cardboard. **[Added 12-12-1989 by L.L. No. 24-1989]**

PLASTICS — Containers composed of high-density polyethylenes, polyethylene terephthalate or other specific plastics as the Town Board may designate. **[Added 12-21-1990 by L.L. No. 30-1990]**

RESIDENTIAL SELF-HAULER — A vehicle utilized in the transporting of solid waste originating from a building or parcel of land having three (3) or fewer dwelling units. **[Added 6-11-1991 by L.L. No. 9-1991]**

RUBBISH — Nonputrescible solid waste consisting of both combustible and noncombustible wastes, including but not limited to nonrecyclable paper, wrappings, cigarettes, wood, wires, glass, bedding, furniture and similar materials which are not designated recyclable materials.

SOLID WASTE — All putrescible and nonputrescible materials or substances discarded or rejected as having served their original intended use or as being spent, useless, worthless or in excess to the owner at the time of such discard or rejection, including garbage, refuse, litter and rubbish, but not including designated recyclable materials or materials to be separated.

VEGETATIVE YARD WASTE — Organic yard and garden waste, leaves, grass clippings and brush.

WHITE GOODS — Discarded household appliances such as stoves, refrigerators, washing machines and other old metal items.

§ 205-3. Regulations.

A. Disposal areas shall be open during such hours as may be designated by resolution of the Town Board adopted from time to time.

B. The personnel in charge of each disposal area shall have full power and authority to direct the manner of deposit of material at different locations within the disposal area that are designated for the deposit of specific types of materials, and anyone using said disposal area shall obey the instructions of said personnel and shall deposit the various types of material only in the areas or containers designated for such types of materials.

C. The disposal area personnel shall designate the unloading area at disposal areas by appropriate signs at both ends of said area. No person may deposit materials other than those designated by these signs. No person other than the authorized personnel of the disposal area may go beyond the signs and enter the area reserved for the deposit of this material.

D. The personnel in charge of each disposal area shall be responsible for the directing of movements of traffic within said disposal area, and anyone operating a vehicle within said disposal area shall obey the instructions of said personnel in this regard. No person shall park a vehicle between the signs designating an unloading zone except for the purpose and time required to unload.

E. The town disposal areas are maintained by the taxpayers of the Town of Southampton and are provided for the use of the residents of the Town of Southampton only. No material of any sort that is collected or transported from outside the limits of the Town of Southampton shall be deposited in said disposal areas. **[Amended 6-11-1991 by L.L. No. 9-1991]**

F. It shall be unlawful for any person to deposit any waste, garbage or rubbish of any kind on land of the Town of Southampton outside the areas designated for the deposit of those materials.

G. No person shall dump, throw or place in any manner any rubbish, refuse, dirt or any material whatsoever in or upon such disposal area nor at a time except that indicated by such sign or signs or directions.

H. Any oral directions given by any person in charge of any disposal area shall take precedence over any sign or displayed directions.

I. It shall be unlawful for any person to deposit any waste, garbage or rubbish outside the gates of any disposal area at any time unless containers for that purpose have been provided and designated.

J. It shall be unlawful for any person other than the disposal area personnel to set fire to any material within the disposal area.

K. It shall be unlawful for any person to remove any materials from the disposal area.

L. No person shall deposit any animal carcass in or upon any transfer station, except that an animal carcass may be buried if immediately interred by the person bringing such carcass to a sanitary landfill in a ditch at least two (2) feet in depth and provided that the same is immediately covered to the level of the surrounding area with earth.

M. No person shall remove, destroy, alter, deface or otherwise injure any sign or signs placed or erected within any public disposal area except upon and by the direction of the Sanitation Supervisor. **[Amended 6-11-1991 by L.L. No. 9-1991]**

N. All material transported to a disposal area shall be covered and secured so as not to disperse material during transportation of such material.

O. All vehicles requiring permits under § 205-4B shall meet the regulations of the Suffolk County Department of Health.

P. No tires may be deposited at a disposal area. However, tires may be accepted for recycling at the discretion of the town upon payment of a fee of seventy dollars ($70.) per ton. Said fee shall be prorated for any fraction or part of a ton. **[Amended 6-14-88 by L.L. No. 9-1988]**

Q. No hazardous wastes shall be disposed of at a disposal area. **[Amended 7-10-1990 by L.L. No. 19-1990]**

R. It shall be unlawful for any person engaged in the business of collecting garbage and waste within the Town of Southampton to make such collection before 6:00 a.m. or after 10:00 p.m. of any day.

S. All appliances shall have their doors removed before disposal at a disposal area.

T. Any material which is incompatible with use of the compactor at a transfer station shall be prohibited at such station and shall be disposed of at a sanitary landfill.

U. All vehicles required to pay a usage fee under § 205-5A and entering the sanitary landfill site must utilize the scale installed at said site and obey the instructions of the personnel in charge. A weight ticket shall be retrieved from the scale house before entering the landfill site.

V. The disposal of land-clearing debris, construction debris or demolition debris shall be prohibited at any town disposal area.

W. The Town Board hereby delegates to the Sanitation Supervisor the authority to adopt rules to prohibit the disposal of any waste materials, in addition to those materials expressly prohibited by this chapter, where the Sanitation Supervisor finds that waste materials would be harmful to the public welfare or would adversely impact the remaining capacity of the sanitary landfill station. Said rules shall be published in the official newspaper of the town and posted on the Town

Clerk's signboard. Said rules shall be effective upon such posting and publishing. **[Amended 6-11-1991 by L.L. No. 9-1991]**

X. No newspaper as defined herein shall be deposited at any Town of Southampton disposal area or town transfer station unless such newspaper is separated from any and all solid waste, trash, rubbish or vegetative yard waste. Such newspaper is to be deposited only at designated areas within such town disposal area or transfer station. When such newspaper is prepared for disposal by anyone other than the ultimate disposer, such as a carter, it should be securely bundled and tied in packages not exceeding fifty (50) pounds with a rope or cord sufficient in strength to facilitate handling. **[Added 4-25-89 by L.L. No. 10-1989]**

Y. No vegetative yard waste as defined herein shall be deposited at any Town of Southampton disposal area or town transfer station unless such vegetative yard waste is separated from any and all solid waste, trash or rubbish. Such vegetative yard waste is to be deposited only at designated areas within such town disposal area or transfer station. **[Added 4-25-89 by L.L. No. 10-1989]**

Z. No white goods as defined herein shall be deposited at any Town of Southampton disposal area or town transfer station unless such white goods are separated from any and all solid waste, trash, rubbish or vegetative yard waste. Such white goods are to be deposited only at designated areas within such town disposal area or transfer station. **[Added 4-25-89 by L.L. No. 10-1989]**

AA. No cans as defined herein shall be deposited at any Town of Southampton disposal area or town transfer station unless such cans are separated from any and all solid waste, trash, rubbish, vegetative yard waste, cardboard, glass, metal or paper. Such cans are to be deposited only at designated areas within such town disposal area or transfer station. **[Added 12-12-1989 by L.L. No. 24-1989]**

BB. No cardboard as defined herein shall be deposited at any Town of Southampton disposal area or town transfer station unless such cardboard is separated from any and all solid waste, trash, rubbish, vegetative yard waste, cans, glass, metal or paper. Such cardboard is to be deposited only at designated areas within such town disposal area or transfer station. **[Added 12-12-1989 by L.L. No. 24-1989]**

CC. No glass as defined herein shall be deposited at any Town of Southampton disposal area or town transfer station unless such glass is separated from any and all solid waste, trash, rubbish, vegetative yard waste, cans, cardboard, metal or paper. Such glass is to be deposited only at designated areas within such town disposal area or transfer station. **[Added 12-12-1989 by L.L. No. 24-1989]**

DD. No metal as defined herein shall be deposited at any Town of Southampton disposal area or town transfer station unless such metal is separated from any and all solid waste, trash, rubbish, vegetative yard waste, cans, cardboard, glass or paper. Such metal is to be deposited only at designated areas within such town disposal area or transfer station. **[Added 12-12-1989 by L.L. No. 24-1989]**

EE. No paper as defined herein shall be deposited at any Town of Southampton disposal area or town transfer station unless such paper is separated from any and all solid waste, trash, rubbish, vegetative yard waste, cans, cardboard, glass or metal. Such paper is to be deposited only at designated area within such town disposal area or transfer station. **[Added 12-12-1989 by L.L. No. 24-1989]**

FF. No plastics as defined herein shall be deposited at any Town of Southampton disposal area or town transfer station unless such plastics are separated from any and all solid waste, trash, rubbish, vegetative yard waste, cardboard, glass, metal or paper. Such plastics are to be deposited at designated areas within such town disposal area or transfer station. **[Added 12-21-1990 by L.L. No. 30-1990]**

§ 205-4. Permits for garbage vehicles; permit fees.

A. All vehicles required to pay a usage fee under § 205-5A shall display a vehicle permit as herein required, which shall be affixed to the left side of the front bumper. **[Amended 6-11-1991 by L.L. No. 9-1991]**

B. **[Amended 7-10-1990 by L.L. No. 19-1990; 6-11-1991 by L.L. No. 9-1991]** Permits will be issued by the Sanitation Supervisor after payment of the following fees for each vehicle:

(1) Nonresidential self-haulers, commercial garbage haulers and all other vehicles required to pay a usage fee under § 205-5A: two hundred fifty dollars ($250.) for the first vehicle and one hundred dollars ($100.) for each additional vehicle.

(2) Roll-off containers:

(a) Zero (0) to twenty (20) cubic yards: fifty dollars ($50.).

(b) More than twenty (20) yards to forty (40) yards: one hundred dollars ($100.).

(c) More than forty (40) yards: two hundred fifty dollars ($250.).

C. All permit fees are annual for the calendar year with no proration.

D. It shall be unlawful to utilize a vehicle in the business of collecting and transporting solid waste without the proper vehicle permit, and each vehicle shall have its own separate permit which shall be issued to the registration number of the vehicle where applicable.

E. **[Amended 6-11-1991 by L.L. No. 9-1991]** All persons applying for vehicle permits under Subsection B of this section shall be required to file an application form with the Sanitation Supervisor for approval.

(1) Prior to the issuance of a permit for any vehicle pursuant to Subsection B of this section, the Sanitation Supervisor shall first approve the application for such permit and the vehicle shall be inspected.

(2) Each applicant for such permit shall provide the following information:

(a) The name and address of the applicant and of all persons having a financial interest in the business.

(b) A brief description of the vehicle, including the manufacturer, factory number, type of body (for example, tank, enclosed pickup, packer, van and so forth), weight of the vehicle unladen, maximum load to be carried and New York State registration number. All trucks must have lettering on the sides of the vehicle indicating their company name, at least six (6) inches high.

(c) All commercial garbage haulers shall provide the town with a list of all residential and nonresidential sites of collection, indicating the street address of such sites and the days of pickup at those sites.

(d) The location where the vehicle is stored or garaged when not in use.

(e) The place or places where the applicant shall dispose of the garbage, refuse, rubbish or trash collected and the manner of disposal.

(f) Whether the applicant or any of the persons having a financial interest in the business has ever been convicted of a felony or misdemeanor or has ever had an operator's license revoked or suspended in this or any other state.

(g) Proof of financial responsibility in the event of injury to persons or property by reason of the negligent operation of any vehicle used in the business.

(h) The type of permit applied for.

(i) All nonresidential self-haulers and commercial garbage haulers must deposit with the town the sum of five hundred dollars ($500.) to be held by the town as a security deposit for faithful performance of the

terms and conditions of this chapter. All deposits so made shall be placed by the town in interest-bearing accounts. The interest so earned shall be paid to each permittee on an annual basis. Upon cancellation or revocation of a permit issued pursuant to this chapter, the security deposit will be returned to the permittee with accumulated interest after deducting any outstanding usage fees.

(3) The Sanitation Supervisor may require any additional information he may deem necessary from an individual applicant in order to administer the regulations enumerated in § 205-3 of this chapter.

F. Said permits shall be issued with an individual identification number which shall be assigned to each vehicle and shall not be transferable. Said permit shall be kept available within the vehicle for inspection upon demand.

G. Any permit issued hereunder may be suspended or revoked by the Town Board after notice to the applicant and a hearing, where one (1) or more of the following grounds exist:

(1) The applicant has not been found to be fit, willing and able to properly perform the service proposed and the applicant is unable to provide sufficient and suitable equipment to meet the requirements of the business.

(2) Issuance of the permit is deemed not to be in the best interests of the town or its residents.

(3) The applicant has failed and refused, without reasonable cause, to collect and dispose of material except in a situation where a contract between the applicant and his customer has been lawfully terminated.

(4) The applicant has failed to account for or pay, without reasonable cause, any fees or bills due to the town.

(5) The applicant has failed to reasonably fulfill his obligations to a customer as commercial refuse collector.

(6) The applicant is insolvent or has made a general assignment for the benefit of creditors or has been

adjudged bankrupt or a money judgment has been secured against him, upon which an execution has been returned wholly or partly unsatisfied.

(7) The applicant or permittee has failed to keep and maintain any records required by the town or has refused to allow the inspection thereof.

(8) The applicant has violated any of the provisions of this Article or has failed to comply with any of the requirements stipulated herein.

(9) The applicant ceased to operate as a commercial collector, for which a permit was previously issued.

(10) The applicant has made a false statement in his permit application.

(11) The applicant has been found to have collected material from outside the town and to have disposed of the same in a public disposal facility within the town. The suspension or revocation will be in addition to penalties provided by § 205-7. **[Amended 6-11-1991 by L.L. No. 9-1991]**

(12) The circumstances of the applicant have been altered to the extent that the applicant would not be qualified to obtain a permit if the circumstances, as altered, existed at the time the applicant had applied for the permit. Failure of the applicant to notify the town, in writing, of such an alteration in circumstances shall likewise constitute grounds for revocation or refusal to recommend.

(13) The applicant has illegally disposed of hazardous or contaminated waste at a disposal area or at any location within the town. The suspension or revocation will be in addition to penalties provided by § 205-7. **[Amended 6-11-1991 by L.L. No. 9-1991]**

(14) The applicant has been found to have violated any of the posted rules pertaning to safe operation of the town-owned and/or maintained public disposal facilities.

§ 205-5. Usage fees.

A. **[Amended 12-12-1989 by L.L. No. 25-1989; 11-13-1990 by L.L. No. 29-1990; 6-11-1991 by L.L. No. 9-1991]** All vehicles utilizing a town disposal area shall be responsible for fees pursuant to a fee schedule adopted by resolution of the Town Board after notice and a public hearing.

B. (Reserved)[1]

C. The method and procedure for collection of the fees prescribed by this section shall be established by the Town Board by resolution.

D. The usage fees prescribed in Subsection A above shall be waived to the extent that the material brought in consists of clean white paper, newspaper or clean flattened cardboard. This exemption shall apply only when all such material is separated from nonqualifying material. **[Added 7-12-88 by L.L. No. 16-1988]**

E. All residential self-haulers may accumulate usage receipts from the landfill attendant within a calendar year in an amount equal to the cost of a yearly permit and may apply this amount towards the purchase of a yearly pass. **[Added 2-27-1990 by L.L. No. 4-1990; amended 6-11-1991 by L.L. No. 9-1991]**

§ 205-6. **Removal of surplus fill.**

A. When available, surplus fill from the grounds of the sanitary landfill areas may be removed by municipal governing bodies under the following conditions:

(1) Said fill shall consist of either sand or marl, as determined by the loading machine operator.

(2) Said material shall be dug and loaded only by the town-owned loading machines, operated by disposal area personnel.

[1] **Editor's Note: Former Subsection B, which dealt with yearly passes exempting certain vehicles from usage fees, as amended, was repealed 6-11-1991 by L.L. No. 9-1991.**

(3) Persons desiring said fill shall present to disposal area personnel a valid permit issued by the Town Board stipulating the amount of fill permitted to be removed.

(4) Said loading machine operator, upon acceptance of the permit, shall load the appropriate vehicle or vehicles provided by the permittee, unless said loading equipment is temporarily inoperative, absent or employed in need elsewhere in the disposal area; there is no guaranty of a specific loading equipment operator.

(5) Said vehicle provided by the permittee shall be loaded at the owner's risk, and the Town of Southampton shall not be responsible for any damage to said vehicle resulting from the act of loading fill into the vehicle.

B. Municipal governing bodies, such as incorporated villages, fire districts and school districts located within the Town of Southampton, may make application for specific amounts of fill without fee. Said application shall be submitted to the Town Board for approval by resolution.

§ 205-7. Penalties for offenses. [Amended 7-10-1990 by L.L. No. 19-1990]

A violation of any of the provisions of this Article shall be deemed a violation and, upon conviction, shall be punishable by a fine of not more than one thousand dollars ($1,000.) or by imprisonment for not more than fifteen (15) days, or both such fine and imprisonment.

(Cont'd on page 20513)

ARTICLE II
Scavenger Waste

§ 205-8. Definitions.

As used in this Article, the following terms shall have the meanings indicated:

ALTERATION — The repair, modification or replacement of any component of an on-site sewage disposal system.

EXCLUDED WASTE — The following forms of waste are considered "excluded waste":

A. Industrial waste.

B. Automobile oil and other noncooking oil.

C. Drainage from basement floors, footings or roofs.

D. Toxic or hazardous substances and chemicals, including but not limited to presticides, acids, paints, paint thinner, herbicides, solvents, photographic chemicals and water-softening agents.

E. Cesspool-cleaning and drain-opening products which are prohibited by Article 39 of the New York Environmental Conservation Law or Suffolk County Local Law No. 12-1980.

ON-SITE SEWAGE DISPOSAL SYSTEM — A system for the disposal of untreated scavenger waste, such as a septic tank, cesspool, sewage holding tank, marine pump-out holding tank or other similar device, on or near the site of the building or buildings being served.

OWNER — A natural person, corporation, the State of New York or any authority or subdivision of the state, the United States of America or any department or agency thereof who owns, rents or leases real property.

PERSON — An individual, association, firm, syndicate, corporation, department, bureau or agency or any entity recognized by law as the subject of rights and duties.

SCAVENGER WASTE — Sanitary sewage and domestic sewage wastes which are normally disposed of in an on-site sewage disposal system. "Scavenger waste" shall not include excluded wastes as defined herein.

SCAVENGER WASTE PLANT — The joint Riverhead/Southampton Scavenger Waste Treatment Plant situate on Riverside Drive, Riverhead.

TOWN — The Town of Southampton, including incorporated villages.

§ 205-9. On-site sewage disposal systems.

A. Only scavenger waste shall be discharged into on-site sewage disposal systems in the town.

B. The discharge of excluded waste into an on-site sewage disposal system shall be prohibited in the town.

§ 205-10. Transportation permit required; fee; rules and regulations.

A. No person shall engage in the removal of scavenger waste from any on-site septic system in the town without a valid permit issued by the Town Clerk and the Suffolk County Department of Health Services.

B.[6] Any applicant for a permit as required by Subsection A of this section shall file a sworn application with the Town Clerk. Said application shall be on a form provided by the Town Clerk and shall contain the name and address of the applicant and the type, model, capacity (in gallons) and registration number of all vehicles to be used. Additionally, such form shall state:

"I, _____, being duly sworn, state and depose that I am familiar with the provisions of Chapter 205, Article II, Scavenger Waste, of the Town Code of the Town of Southampton. I will report the address and exact location of all on-site sewage disposal systems pumped by me

[6] Editor's Note: Amended at time of adoption of Code; see Ch. 1, General Provisions, Art. I.

or my business within the Town of Southampton as required by Chapter 205, Article II. I will comply with all other provisions of Chapter 205, Article II. I am aware that failure to comply will result in the assessment of a penalty of two hundred fifty dollars ($250.) and/or fifteen (15) days' imprisonment for each violation."

C. The permit fee for the permit required by Subsection A of this section shall be two hundred fifty dollars ($250.) per vehicle. This fee shall be collected by the Town Clerk before the permit is issued. A permit shall be issued for each vehicle to be utilized by the applicant.

D. Each person with a permit under the provisions of this section shall file on the last Friday of each month, on a form to be provided by the Town Clerk, a report for each vehicle with the Town Clerk, stating the address, Suffolk County Tax Map number and exact location of each on-site sewage disposal system pumped during the month and shall certify that no excluded waste was disposed of at the joint scavenger waste facility.

E. All scavenger waste generated within the town shall be disposed of at the scavenger waste plant.

F. No excluded waste shall be disposed of at the scavenger waste plant.

G. The rules for disposal of scavenger waste at the scavenger waste plant shall be promulgated by the Town of Riverhead. The personnel in charge of said facility shall have full authority to implement said rules. Any violation of said rules by a person licensed by the Town of Southampton shall be deemed a violation of this chapter.

§ 205-11. Construction or alteration permit for on-site sewage disposal system; fee.

A. No person shall construct a new on-site sewage disposal system or alter any existing on-site disposal system in the town without first obtaining a permit from the Town Clerk. Such permit shall state the exact location of the on-site sewage

disposal system and the address and Tax Map number of the property where the work is performed in the manner and form specified by the Town Clerk.

B. The fee charged for such construction permit shall be in an amount prescribed by resolution of the Town Board.

§ 205-12. Construction standards for on-site sewage disposal systems.

A. All new construction of on-site sewage disposal systems in the town shall conform to Standards for Sewage and Waste Disposal Systems as then established by the Suffolk County Department of Health Services.

B. All new construction shall be located as prescribed by the Suffolk County Department of Health Services and at a location where pumping can occur without trespassing on lands of another owner an express easement for that purpose over another owner's premises exists.

C. All on-site sewage disposal systems shall be covered in a manner that permits inspection as provided for herein.

§ 205-13. Inspections.

A. Every five (5) years, or sooner if conditions require, on-site sewage disposal systems shall be inspected by qualified inspectors employed by the town. A copy of this inspection report shall be provided to the owner. This requirement shall not apply to on site sewage disposal systems in use on the effective date of this chapter until said systems are altered or pumped. However, nothing herein shall prevent a lawful inspection of an existing on-site sewage disposal system where an inspector has reason to believe that an existing system may be causing actual or potential pollution of groundwater or surface water, contamination of the drinking water supply, nuisance problems or other public health hazards.

B. The conduct of inspections shall be subject to all applicable laws. Five (5) days' written notice is to be given to the owner that an inspection will be made.

C. No civil claim shall lie against the town for any damages resulting from any inspection as authorized herein.

D. An inspector may order whatever remedial action is necessary to abate actual or potential pollution of groundwater or surface water, contamination of the drinking water supply, nuisance problems or other public health hazards. The time for compliance shall be specified. Failure to comply with an inspector's order shall be a violation of this Article.

§ 205-14. Fees for scavenger waste.

The Town Board shall, by resolution, set the fee for the disposing of scavenger waste at the scavenger waste plant at an amount of not less than one and five-tenths cents ($0.015) per gallon. The fee to be paid shall be calculated on full-tank capacity.[7]

§ 205-15. Penalties for offenses.

A. Any violation of this Article shall be punishable by a fine of not more than one thousand dollars ($1,000.) or by imprisonment for a term not to exceed fifteen (15) days, or both.[8]

B. In addition to any other remedy available at law, the town may seek whatever equitable remedies are available to it to enforce this Article.

[7] Editor's Note: Current fees are available at the town offices.
[8] Editor's Note: Amended at time of adoption of Code; see Ch. 1, General Provisions, Art. I.

Local Law Filing

NEW YORK STATE DEPARTMENT OF STATE
162 WASHINGTON AVENUE, ALBANY, NY 12231

(Use this form to file a local law with the Secretary of State.)

Text of law should be given as amended. Do not include matter being eliminated and do not use italics or underlining to indicate new matter.

County / City / Town / Village of SOUTHAMPTON

Local Law No. 27 of the year 19 92

A local law DELETING FROM THE CODE OF THE TOWN CODE OF THE TOWN OF
(Insert Title)
SOUTHAMPTON SUBSECTION K OF SECTION 205-3.

Be it enacted by the TOWN BOARD of the
(Name of Legislative Body)

County / City / Town / Village of SOUTHAMPTON as follows:

SEE ATTACHED

(If additional space is needed, attach pages the same size as this sheet, and number each.)

DOS-239 (Rev. 7/90)

LOCAL LAW NO. 27 OF 1992

A LOCAL LAW deleting from the Town Code of the Town of Southampton subsection K of section 205-3, which prohibited anyone from removing any material from a disposal area at the landfill or transfer stations.

BE IT ENACTED by the Town Board of the Town of Southampton as follows:

SECTION 1:

Section 205-3 K of the Town Code of the Town of Southampton is deleted.

SECTION 2. Severability

If any section or subsection, paragraph, clause, phrase or provision of this law shall be adjudged invalid or held unconstitutional by any court of competent jurisdiction, any judgment made thereby shall not affect the validity of this law as a whole or any part thereof other than the part or provision so adjudged to be invalid or unconstitutional.

SECTION 3. Effective Date.

This local law shall take effect upon the filing of this local law with the Secretary of State pursuant to the Municipal Home Rule Law.

/92

Councilwoman Seaman, seconded by Councilman Penny and duly adopted with the following recorded vote: All in favor:

RESOLVED, that the Town Clerk is hereby authorized to publish the following notice of adoption:

NOTICE OF ADOPTION

TAKE NOTICE, that a public hearing was held on April 14, 1992 at 1:00 p.m. at the Town Hall, 116 Hampton Road, Southampton, New York, the Town Board at the meeting of April 14, 1992 hereby adopted Local Law No. 7 of 1992 as follows: "A LOCAL LAW amending certain sections of Chapter 205, Article I (Sanitary Landfill Stations and Garbage Transfer Stations), to revise certain fees applicable to commercial haulers at the landfill and transfer stations."

Copies of the local law are on file in the Town Clerk's Office, Monday through Friday from 8:30 A.M. to 4:00 P.M.

BY ORDER OF THE TOWN BOARD
TOWN OF SOUTHAMPTON, NEW YORK
KENNETH H. THOMMEN, TOWN CLERK

LOCAL LAW NO. 7 OF 1992

A LOCAL LAW amending certain sections of Chapter 205, Article I (Sanitary Landfill Stations and Garbage Transfer Stations), to revise certain fees applicable to commercial haulers at the landfill and transfer stations.

/92

BE IT ENACTED by the Town Board of the Town of Southampton that certain sections of Chapter 205, Article I, are amended as follows:

SECTION I.

Section 205-3P of the Town Code of the Town of Southampton is amended as follows:

P. No tires may be deposited at a disposal area. However, tires may be accepted for recycling at the discretion of the town upon payment of a fee of one hundred dollars ($100.) per ton. Said fee shall be prorated for any fraction or part of a ton.

SECTION II.

Section 205-4B of the Town Code of the Town of Southampton is amended as follows:

B. Permits will be issued by the Town Clerk's office after payment of the following fees for each vehicle:

(1) Garbage haulers and all other vehicles required to pay a usage fee under Section 205-5A (3): three hundred dollars ($300.) for the first vehicle and one hundred twenty-five dollars ($125.) for each additional vehicle.

(2) Roll-off containers:

(a) Zero (0) to twenty (20) cubic yards: seventy-five dollars ($75.).

(b) More than twenty (20) yards to forty (40) yards: one hundred fifty dollars ($150.).

(c) More than forty (40) yards: three hundred dollars ($300.).

SECTION III.

Section 205-5A (3) of the Town Code of the Town of Southampton is amended as follows:

(3) Garbage haulers, roll offs and all other vehicles:

(a) Solid waste, as defined in Section 205-2: Fifty ($50.) dollars per ton, including any part of a ton.

(a) As of January 1, 1993, solid waste, as defined in Section 205-2: Sixty ($60.) dollars per ton, including any part of a ton.

(b) Comingled recyclables: Forty ($40.) per ton, including any part of a ton.

(c) Source-separated recyclables: No charge.

SECTION IV. Severability.

If any section or subsection, paragraph, clause, phrase or provision of this law shall be adjudged invalid or

held unconstitutional by any court of competent jurisdiction, any judgment made thereby shall not affect the validity of this law as a whole or any part thereof other than the part or provision so adjudged to be invalid or unconstitutional.

SECTION V. Effective Date.

This Local Law shall take effect upon the filing of this Local Law with the Secretary of State pursuant to the Municipal Home Rule Law.

359. The following resolution was introduced by Councilman Penny, seconded by Councilwoman Seaman and duly adopted with the following recorded vote: All in favor:

BE IT ENACTED by the Town Board of the Town of Southampton that Section 330-121 H is amended as follows:

A LOCAL LAW amending Section 330-121 H of the Code of the Town of Southampton to raise the application fee for special exception use applications.

SECTION I.

Section 330-121 H of the Town Code of the Town of Southampton is amended as follows:

3/24/92

RESOLVED, that the Town Clerk be and hereby is authorized to publish the following Notice of Adoption:

NOTICE OF ADOPTION

TAKE NOTICE, that after a public hearing was held on March 10, 1992, at 1:00 p.m. at the Town Hall, 116 Hampton Road, Southampton, New York, the Town Board on March 24, 1991 hereby adopted this amendment as Local Law No. 5 of 1992 as follows: "A LOCAL LAW amending Chapter 205 (Landfills, Transfer Stations and Scavenger Waste) of the Town Code of the Town of Southampton to provide for an alternate minimum security deposit for non-residential self-haulers and commercial garbage haulers."

Copies of this local law are on file in the Town Clerk's Office, Monday through Friday from 8:30 a.m. to 4:00 p.m.

BY ORDER OF THE TOWN BOARD
TOWN OF SOUTHAMPTON, NEW YORK
KENNETH H. THOMMEN, TOWN CLERK

LOCAL LAW NO. 5 OF 1992

A LOCAL LAW amending Chapter 205, Section 205-4E (Landfills, Transfer Stations and Scavenger Waste), of the Town Code of the Town of Southampton to provide for an alternate minimum security deposit for non-haulers and commercial garbage haulers.

BE IT ENACTED by the Town Board of the Town of Southampton as follows:

SECTION 1.

Section 205 - 4 E (i) is amended to provide:

All non-residential self-haulers and commercial garbage haulers must deposit with the Town the sum of the lesser of five hundred dollars ($500), or an amount equal to the largest monthly bill paid by the hauler within the preceding twelve-month period for usage fees, to be held by the Town as a security deposit for faithful performance of the terms and conditions of this chapter. All deposit so made shall be placed by the Town in interest bearing accounts. The interest so earned shall be paid to each permitee on an annual basis. Upon cancellation or revocation of a permit issued pursuant to this Chapter the security deposit will be returned to the permitee with accumulated interest after deducting any outstanding usage fees.

SECTION 2. Severability

If any section or subsection, paragraph, clause, phrase or provision of this law shall be adjudged invalid or held unconstitutional by any court of competent jurisdiction, any judgment made thereby shall not affect the validity of this law as a whole or any part thereof other

than the part or provision so adjudged to be invalid or unconstitutional.

SECTION 3. Effective Date

This local law shall take effect upon filing with the Secretary of State pursuant to the Municipal Home Rule Law.

279. The following resolution was introduced by Councilwoman Seaman, seconded by Councilman Heaney and duly adopted with the following recorded vote: All in favor:

RESOLVED, that the following persons are hereby appointed to the Home Improvement Licensing Review Board for 1992 - 12/31/93:

Anthony D'Italia
Henry Steube
John Falkowski
Gerson Helfant
Charles B. Barnett

and be it further

RESOLVED, that Anthony D'Italia is appointed Chairman for 1992 - 12/31/93.

APPENDIX R-K

MATERIALS MARKET SURVEY

MATERIALS MARKET SURVEY FOR OIL

NAME	MATERIAL QUALITY REQUIREMENTS	PRICE($)	TRANSPORTATION	CONTRACT PREFERENCE	OTHER
AB Oil Service Smithtown, NY	Waste oil, transmission fluid; no thinner or non-automotive oils Anti-freeze	Charge $0.10 per gallon during summer otherwise no charge; $40.00 per drum	Pumper truck	long-term	Level of contamination affects recyclability Minimum delivery of 250 gallons May supply drums if needed
Certified Waste Oil Garden City, NY	Engine oil, transmission fluid, hydraulic oil, gear oil	No charge for high quality deliveries; free pick-up of 500 gallons; $25.00-$50.00 for smaller pick-ups	Pumper truck	short-term	Effort should be made to keep waste oil as clean as possible Minimum delivery of 500 gallons May provide pick-up
Sid Waste Oil Jamaica, NY	Waste oil, transmission fluid, hydraulic oil, lubricating oil	No charge	Pumper truck	long-term	May install tanks and provide pumping and hauling No antifreeze
General Waste Oil Wyandanch, NY	Waste oil	Charge $15.00 per drum or $0.10 per gallon if pumped	Pumper truck, load drums onto flatbed	long-term	May provide tanks and pick-up Prefer at least a pick-up of 275 gallons
Akba Waste Oil Bethpage, NY	Waste motor oil	Charge $0.10 per gallon	Pumper truck		Delivers to refinery/processor Prefer a pick-up of at least two 275 gallon tanks No cleaners or paint thinner
RD Waste Oil Long Island City, NY	Waste oil Anti-freeze	Charge $35.00-$50.00 per 550 gallon tank; no municipal charges; $50.00 per 55 gallon drum	Pumper truck	long-term	No charge for municipal deliveries over 550 gallons and for pick-ups of greater than 275 gallons
Buckner Waste Oil New Windsor, NY	Waste oil	Charge $0.20 per gallon	Pumper truck		Requires a pick-up of at least 2000 gallons

Source: Malcolm Pirnie Inc. Market Survey.

MATERIALS MARKET SURVEY FOR WOOD

NAME	MATERIAL QUALITY REQUIREMENTS	PRICE($/CY)	TRANSPORTATION	CONTRACT PREFERENCE	OTHER
Delisa Pallet Corp. Newark, NJ	Broken pallets, clean wood	variable	Truck	short-term	May provide flatbed trailers and pick-up 150 cy minimum
Dauman Pallet Corp. Linden, NJ	Stumps, yard wood (baled or loose)	(6.00)	Truck	short-term	Approved NJDEP facility Make mulch with chipped wood May provide trailers and dumpsters and pick-up for 30 or 40 yard full containers
Star Recycling Woodside, NY	Clean (loose or packed), no yard waste	variable	N/A	long-term	May provide storage containers and transportation
Hubbard Sand and Gravel Bayshore, NY	No trees	(7.00)	Truck	short-term	Minimum charge of $25.00
BOE Services Brooklyn, NY	Clean, no yard waste	(7.50)	Truck and barge	long-term	May provide storage containers and pick-up

Source: Malcolm Pirnie Inc. Market Survey.

MATERIALS MARKET SURVEY FOR METALS

NAME	MATERIAL QUALITY REQUIREMENTS	PRICE($/TON)	TRANSPORTATION	CONTRACT PREFERENCE	OTHER
DIMATTEO SALVAGE CO. WEST BABYLON, NY	ALUMINUM CANS, LOOSE	400.00	TRUCK	LONG-TERM	MAY PROVIDE TRANSPORTATION, EQUIPMENT AND STORAGE CONTAINERS AT A NEGOITABLE PRICE
	BRASS	VARIES			
	COPPER	VARIES			
	OTHER NON-FERROUS METALS	VARIES			
SCHIOPPO CORP. STATEN ISLAND, NY	ALUMINUM, LOOSE	640.00	TRUCK	SHORT-TERM	MAY PROVIDE ROLL-OFF CONTAINERS AND PICK-UP FOR A NEGOITABLE PRICE
	BRASS-CLEAN	900.00-1100.00			
	COPPER-CLEAN	1300.00-1500.00			
	MIXED STEEL	40.00-60.00			
	GALVANIZED(LIGHT IRON)	0.00			
COLETTA RECYCLING CORP.	STEEL, LOOSE (PICKED-UP)	VARIES	TRUCK	LONG-TERM	MAY PROVIDE TRANSPORTATION, AND STORAGE CONTAINERS AT A NEGOITABLE PRICE
	STEEL, #1 PREPARED (PICKED-UP)	60.00			
	STEEL, #2 PREPARED (PICKED-UP)	80.00			
	CAST IRON (PICKED-UP)	78.00			
	ALUMINUM SIDING ALONE	810.00			
	ALUMINUM CANS, BALED	760.00			
	ALUMINUM CANS, LOOSE	700.00			
	BRASS	SPOT MARKET			
	COPPER	SPOT MARKET			
NEW YORK CITY MRF NEW YORK, NY	ALUMINUM FOIL, BALED	200.00-400.00	N/A	NEGOITABLE	PREFER UNCONTAMINATED, CLEAN CANS MAY PROVIDE TRANSPORTATION AT A NEGOITABLE PRICE
	ALUMINUM CANS, BALED	900.00			
	TIN CANS	62.00			
BOULDER RESOURCES NEW YORK, NY	ALUMINUM CANS, LOOSE	600.00-700.00	TRUCK	NEGOITABLE	MAY PROVIDE TRANSPORTATION, EQUIPMENT AND STORAGE AT A NEGOITABLE PRICE
	ALUMINUM CANS, BALED	900.00-1000.00			
	TIN CANS, LOOSE	20.00			
	TIN CANS, 5' BALE	62.00			
	WHITE GOODS, LOOSE, NO CAPACITORS	30.00			

SOURCE : MALCOLM PIRNIE INC. MARKET SURVEY .

Material Market Survey For Textiles

NAME	MATERIAL QUALITY REQUIREMENTS	PRICE ($/Ton)	TRANSPORTATION	CONTRACT PREFERENCE	OTHER
Mill Sanitary Wiping Cloth Bronx, NY	Prefer baled; loose bags or bundled	60 - 100	Truck	short-term	Deliveries should be between 5000 and 6000 lbs.; no oil or greased cloth May provide transportation
Scott Cynaman Textiles Inc. Brooklyn, NY	Baled, loose, little contamination	40 - 60	Truck	long-term	10000 lb. minimum May provide containers in exchange for a volume guarantee
Atlantic Wool Waste Co. Brooklyn, NY	All natural fiber cut-offs, no post consumer	800	N/A	long-term	1000 lb. minimum
North Atlantic Int.,Bronx, NY	Baled second hand clothing,no stockings, handbags,shoes,belts,plastic jackets, paired socks	140 - 170	Truck	N/A	
Philadelphia Rag Co. Philadelphia, Pa.	Baled second hand clothing,no stockings, handbags,shoes,belts,plastic jackets, no statues or paintings,paired socks	160	Truck	N/A	

Source: Malcolm Pirnie Inc. Market Survey .

MATERIALS MARKET SURVEY FOR NEWSPAPER

NAME	MATERIAL QUALITY REQUIREMENTS	PRICE($/TON)	TRANSPORTATION	CONTRACT PREFERENCE	OTHER
.TTEO SALVAGE PANY,W.BABYLON, NY	BALED OR LOOSE	AS PER FIBRE MARKET NEWS	TRUCK	LONG TERM	MAY PROVIDE EQUIPMENT, TRANSPORT-ATION AND CONTAINERS FOR A COST
ION ASSOCIATION PORATION TBURY, NY	BALED	DEPENDS ON CONAMINANT LEVEL	TRUCK	LONG TERM	MAY PROVIDE EQUIPMENT AND TRANSPORTATION FOR A COST
ERTO & S INC.,MASPETH,NY	BALED OR LOOSE	WILL COST TO HAVE REMOVED	TRUCK	SHORT TERM	MAY PROVIDE EQUIPMENT, TRANSPORT-ATION AND CONTAINERS FOR A COST
EDETTO INC. YORK, NY	BALED, CLEAN, 46000 lb. PER CONTAINER LOOSE, CLEAN	15 - 16 0	TRUCK, MAYBE RAIL	SHORT TERM	FEELS MARKET WILL IMPROVE
YCLING INDUSTRIES ARONECK, NY	BALED ,EXPORT DENSITY(53,000 lb PER TRAILER),GRADE 7 NEWS	22(PICKED-UP)	TRUCK	LONG TERM/ SPOT MKT.	MAY PROVIDE CONTAINERS
YCLING SPECIALISTS SEY CITY, NY	PREFERS BALED, MINIMAL CONTAMINATION	15	TRUCK	LONG TERM	MAY PROVIDE TRANSPORTATION,AND CONTAINERS FOR A COST,MAY HELP WITH EDUCATION PROGRAM
INTE & SONS YORK, NY	BALED ,LOW GRADES ARE LESS REVENUE	VARIES	TRUCK, RAIL	LONG TERM	WILL PROVIDE TRANSPORTATION
PAPER STOCK TRAL ISLIP,NY	LOOSE, CLEAN,GRADE 6 NEWS	5	TRUCK	LONG TERM	MAY PROVIDE TRANSPORTATION,AND CONTAINERS FOR A COST
RECYCLING CORP DEN CITY PARK,NY	BALED ,LOW GRADE NEWS BALED ,CLEAN NEWS	5 - 10 20	TRUCK	LONG TERM	MAY PROVIDE CONTAINERS

IRCE : MALCOLM PIRNIE INC. MARKET SURVEY.

MATERIALS MARKET SURVEY FOR PLASTICS

NAME	MATERIAL QUALITY REQUIREMENTS	PRICE ($/TON)	TRANSPORTATION	CONTRACT PREFERENCE	OTHER
UNION CARBIDE BOUND BROOK, NJ	CLEAR PET GREEN PET MIXED COLOR PET HDPE (MILK CONTAINERS) MIXED COLOR HDPE PET/HDPE MIXED	120.00-200.00 0.00-140.00 80.00-160.00 160.00-220.00 100.00-160.00 50.00-110.00	TRUCK	LONG OR SHORT-TERM	PRICE DEPENDS UPON CONTRACT, MAY PROVIDE TRANSPORTATION AT NO CHARGE, PREFER BALED
DEBCO PLASTICS FREEPORT, NY	INDUSTRIAL WASTE ONLY NO POST CONSUMER	N/A	N/A	NEGOITABLE	MAY PROVIDE TRANSPORTATION AT ADDITIONAL CHARGE
NEW YORK CITY MRF NEW YORK, NY	PET HDPE	200.00 160.00	TRUCK	NEGOITABLE	PREFER BALED, MAY PROVIDE PICK-UP AT A NEGOITABLE PRICE
AAA POLYMER INC. BROOKLYN,NY	HDPE-SEPARATED LDPE-SEPARATED NO POST CONSUMER	CHANGES DAILY	TRUCK	N/A	MAY PROVIDE TRANSPORTATION AND CONTAINERS AT NO CHARGE
E.G. PLASTIC BROOKLYN,NY	PVC-CLEAN PET-CLEAN	20.00-300.00 20.00-300.00	TRUCK, RAIL	NEGOITABLE	MAY PROVIDE TRANSPORTATION AT AN ADDITIONAL CHARGE
IBERIA PLAST. RECYC. EAST FARMINGDALE, NY	PVC POLY-STYRENE NO POST CONSUMER	40.00-60.00 600.00	TRUCK	NEGOITABLE	MAY PROVIDE GAYLORD BOXES AND PICK-UP

SOURCE : MALCOLM PIRNIE INC. MARKET SURVEY .

MATERIALS MARKET SURVEY FOR PLASTICS

NAME	MATERIAL QUALITY REQUIREMENTS	PRICE ($/TON)	TRANSPORTATION	CONTRACT PREFERENCE	OTHER
NICON PLASTICS,INC. LONG ISLAND CITY, NY	POST-CONSUMER SODA BOTTLES, CLEAN AND BALED	160.00	TRUCK	LONG-TERM	MAY PROVIDE EQUIPMENT FOR BALING AND TRANSPORTATION AT A NEGOITABLE PRICE
PET POLYMERS ROOSEVELT, NY	ANY MATERIAL THAT IS CLEAN AND SEPARATED BY RESIN	VARIES	TRUCK	LONG-TERM	WILLING TO OPERATE PROCESSING FACILITY FOR A NEGOITABLE PRICE
R2B2 BRONX, NY	PET-NO CAPS HDPE PVC	100.00-200.00 120.00-200.00 40.00-100.00	TRUCK	N/A	NO SERVICES PROVIDED
PLASTIC RECYCLERS, INC. WYANDANCH, NY	ANY TYPE-SEPARATED AND BALED	VARIES	TRUCK	N/A	CURRENTLY NOT ACCEPTING MATERIALS DUE TO REDUCTION IN PLASTICS LUMBER MARKET
BROWNING-FERRIS WESTBURY, NY	ANY TYPE-BALED	VARIES	N/A	N/A	WORKED FOR NORTH HEMPSTEAD FOR PAST THREE YEARS
BOULDER RESOURCES NEW YORK, NY	HDPE PET LDPE PVC MIXED PLASTIC (for further separation)	0.00-220.00 0.00-220.00 0.00-220.00 0.00-220.00 N/A	TRUCK	NEGOITABLE	MAY PROVIDE EQUIPMENT, TRANSPORTATION AND STORAGE AT A NEGOITABLE PRICE

SOURCE : MALCOLM PIRNIE INC. MARKET SURVEY .

MATERIALS MARKET SURVEY FOR GLASS

NAME	MATERIAL QUALITY REQUIREMENTS	PRICE ($/TON)	TRANSPORTATION	CONTRACT PREFERENCE	OTHER
RECYCLING INDUSTRIES MAMARONECK, NY	CLEAR- NO RINGS,CAPS OR CERAMICS COLORED- NO RINGS,CAPS OR CERAMICS	SPOT MARKET	TRUCK	LONG-TERM	MAY PROVIDE TRANSPORTATION AND CONTAINERS AT NO EXTRA CHARGE
OMNI TECH. SERVICES UNIONDALE, NY	MIXED GLASS W/ PLASTICS AND METALS COLOR SEPARATED,MINIMAL PROCESSING, PARTIALLY BROKEN	(26.00) VARIES	TRUCK	LONG-TERM	MAY PROVIDE TRANSPORTATION, CHARGE WILL VARY
EWG GLASS RECYCLING JAMAICA, NY	FLINT AMBER GREEN MIXED	25.00 20.00 10.00 (20.00)	TRUCK	LONG-TERM	MAY PROVIDE TRANSPORTATION AT $5/TON MAY PROVIDE CONTAINERS AT $100/PER MONTH
NEW YORK CITY MRF NEW YORK, NY	AMBER, PROCESSED TO FURNACE READY CULLET GREEN, PROCESSED TO FURNACE READY CULLET FLINT, PROCESSED TO FURNACE READY CULLET	20.00-40.00 20.00-40.00 55.00	TRUCK	LONG OR SHORT-TERM	MAY PROVIDE PICK-UP AT A NEGOITABLE PRICE
BOULDER RESOURCES NEW YORK, NY	MIXED GLASS GREEN BROWN CLEAR	VARIES 10.00 20.00 30.00	TRUCK	NEGOITABLE	MAY PROVIDE EQUIPMENT, TRANSPORTATION, AND STORAGE AT A NEGOITABLE PRICE

SOURCE : MALCOLM PIRNIE INC. MARKET SURVEY .

MATERIALS MARKET SURVEY FOR VARIOUS PAPER GRADES

NAME	MATERIAL QUALITY REQUIREMENTS	PRICE($/TON)	TRANSPORTATION	CONTRACT PREFERENCE	OTHER
ERTO & SONS , , MASPETH ,NY	BALED OR LOOSE VARIOUS GRADES	1 - 60	TRUCK	SHORT TERM	MAY PROVIDE EQUIPMENT, TRANSPORT-ATION AND CONTAINERS FOR A COST
ID RECYCLING PAPER P.,BROOKLYN, NY	BOX BOARD, HAMPERS, CARTS OFFICE WASTE	(50) VARIES	TRUCK	LONG TERM	
EDETTO INC. V YORK ,NY	BALED, MIXED OFFICE PAPER LOOSE, CLEAN	15 - 20 20	TRUCK, MAYBE RAIL	SHORT TERM	FEELS MARKET WILL IMPROVE
CYCLING INDUSTRIES ARONECK ,NY	OFFICE PAPER, LOOSE, VARIOUS GRADES	10 - 30(PICKED-UP)	TRUCK	LONG TERM/ SPOT MRKT.	
CYCLING SPECIALISTS SEY CITY , NY	OFFICE PAPER,BALED, MINIMAL CONTAMINATION, VARIOUS GRADES	20 - 30	TRUCK	LONG TERM	MAY PROVIDE TRANSPORTATION,AND CONTAINERS FOR A COST,MAY HELP WITH AN EDUCATION PROGRAM
AS PAPER W YORK , NY	OFFICE PAPER, VARIOUS HIGH QUALITY GRADES	95 - 230	TRUCK	LONG TERM	MAY PROVIDE EQUIPMENT AND TRANSPORTATION FOR A COST
ONTE & SONS W YORK , NY	BALED ,LOW QUALITY IS LESS REVENUE	VARIES	TRUCK, RAIL	LONG TERM	MAY PROVIDE TRANSPORTATION
EX WASTE PAPER W YORK , NY	OFFICE PAPER, VARIOUS GRADES, BALED OR LOOSE COMPUTER PAPER	70 - 120 100(APPROX.)	TRUCK	ANY TYPE	MAY PROVIDE BINS AND STORAGE CONTAINERS FREE IF MORE THAN ONE TON/WEEK

MATERIALS MARKET SURVEY FOR VARIOUS PAPER GRADES

NAME	MATERIAL QUALITY REQUIREMENTS	PRICE($/TON)	TRANSPORTATION	CONTRACT PREFERENCE	OTHER
LIANO RECYCLING CO. / YORK , NY	OFFICE PAPER, VARIOUS GRADES, BALED OR LOOSE	10 - 30	TRUCK	SPOT MRKT.	
ROCO INC. / YORK , NY	BALED, WHITE PAPER ONLY	200(PICKED-UP)	TRUCK	ANY TYPE	MAY PROVIDE 40 ft. STORAGE CONTAINERS,MIN. OF 20 TONS
URITY PAPER YCLING AICA , NY	MIXED OFFICE PAPER, LOOSE OR BALED	30 - 35	TRUCK	LONG TERM	MAY PROVIDE TRANSPORTATION AND CONTAINERS
IOKHAVEN RECYCLING ASTE INC. CHOGUE , NY	OFFICE PAPER, VARIOUS GRADES, BALED OR BUNDLED	10 - 30	TRUCK	LONG TERM	
STBURY PAPER CO. STBURY, NY	HIGH GRADES OFFICE PAPER, LOOSE OR BALED	VARIES	TRUCK	N/A	REPORTS THAT SEVERAL MIXED PAPER MILLS ARE BEING PLANNED. SUGGESTS NOT RECYCLING MIXED PAPER AT THIS TIME.
	MIXED POST-CONSUMER PAPER, LOOSE	(50)			
	CHIP BOARD ONLY(PAPER BOARD),LOOS	(40)			

JRCE : MALCOLM PIRNIE INC. MARKET SURVEY .

MATERIALS MARKET SURVEY FOR BATTERIES

NAME	MATERIAL QUALITY REQUIREMENTS	PRICE($)	TRANSPORTATION	CONTRACT PREFERENCE	OTHER
MERCURY REFINING ALBANY, NY	MIXED HOUSEHOLD BATTERIES	VARIABLE	TRUCK	SHORT-TERM	REVENUE DEPENDS ON PERCENT OF MIX THAT IS RECOVERABLE
R.B. SCRAP IRON	AUTO BATTERIES ONLY ON A SKID, 3 HIGH WITH CARDBOARD IN BETWEEN EACH BATTERY. BOUND.	.04-.05/LB	TRUCK	NEGOITABLE	MAY PROVIDE CONTAINERS AND TRANSPORTATION
RSR CORPORATION DALLAS, TX	AUTO BATTERIES ONLY, LOOSE OR ON A SKID, 3 HIGH W/CARDBOARD IN BETWEEN EACH BATTERY. BOUND.	.08-.085/LB (FULL TRAILER)	TRUCK	NEGOITABLE	MAY PROVIDE TRANSPORTATION
BROOKFIELD METAL CO.	AUTO BATTERIES ONLY, LOOSE OR ON PALLETS	1.25-1.50 (PER BATTERY)	TRUCK	NEGOITABLE	MAY PROVIDE TRANSPORTATION
PASCAP CO.	AUTO BATTERIES ONLY ON A SKID, 3 HIGH WITH CARDBOARD IN BETWEEN EACH BATTERY. BOUND. AUTO BATTERIES ONLY, LOOSE	.08/LB (FULL TRAILER) .06/LB (FULL TRAILER)	TRUCK	NEGOITABLE	MAY PROVIDE TRANSPORTATION
A. SCRAP DEALERS INC.	AUTO BATTERIES ONLY ON A SKID, 3 HIGH WITH CARDBOARD IN BETWEEN EACH BATTERY. BOUND. AUTO BATTERIES ONLY, LOOSE	2.50 (PER BATTERY) OR .07/LB 2.00 (PER BATTERY)	TRUCK	NEGOITABLE	MAY PROVIDE TRANSPORTATION
SCHIOPPO CORP. STATEN ISLAND, NY	AUTO BATTERIES ONLY ON A SKID, 3 HIGH WITH CARDBOARD IN BETWEEN EACH BATTERY. BOUND.	1.15 EACH OR 3.25/LB (FULL TRAILER)	TRUCK	SHORT-TERM	MAY PROVIDE TRANSPORTATION AND ROLL-OFF CONTAINERS

SOURCE : MALCOLM PIRNIE INC. MARKET SURVEY .

MATERIALS MARKET SURVEY FOR C & D DEBRIS
AND BULKY ITEMS

NAME	MATERIAL QUALITY REQUIREMENTS	PRICE ($)	TRANSPORTATION	CONTRACT PREFERENCE	OTHER
VIGLIOTTI RECYCLING	MIXED C&D WASTE	-30 / TON	TRUCK	N/A	INTERESTED IN SERVING TOWN
STAR RECYCLING	MIXED C&D WASTE	-15 TO -30 PER CY	TRUCK	MAYBE	MAY PROVIDE CONTAINERS AND TRANSPORTATION
COUSINS METAL INDUSTRY	MIXED C&D WASTE (NO RUBBLE)	VARIABLE	TRUCK	N/A	
	WHITE GOODS	N/A			
	FURNITURE, RUGS ETC.	N/A			

SOURCE : MALCOLM PIRNIE INC. MARKET SURVEY .

MATERIALS MARKET SURVEY FOR OCC

NAME	MATERIAL QUALITY REQUIREMENTS	PRICE($/TON)	TRANSPORTATION	CONTRACT PREFERENCE	OTHER
ATTEO SALVAGE IPANY, W.BABYLON,NY	BALED OR LOOSE	AS PER FIBRE MARKET NEWS	TRUCK	LONG TERM	MAY PROVIDE EQUIPMENT, TRANSPORT-ATION AND CONTAINERS FOR A COST
MON ASSOCIATION PORATION TBURY , NY	BALED	DEPENDS ON CONAMINANT LEVEL	TRUCK	LONG TERM	MAY PROVIDE EQUIPMENT AND TRANSPORTATION FOR A COST
FIBERS INC.	BALED, NO WAX PAPER OR GARBAGE	35(PICKED-UP)	TRUCK	LONG/SHORT TERM	MAY PROVIDE EQUIPMENT, AND CON--TAINERS FOR A COST
ERTO & SONS MASPETH, NY	BALED OR LOOSE	N/A	TRUCK	SHORT TERM	MAY PROVIDE EQUIPMENT, TRANSPORT-ATION AND CONTAINERS FOR A COST
EDETTO INC. / YORK , NY	BALED, CLEAN, 48000 lb. PER CONTAINER LOOSE, CLEAN	40 20	TRUCK, MAYBE RAIL	SHORT TERM	FEELS MARKET WILL IMPROVE
YCLING INDUSTRIES MARONECK , NY	BALED ,EXPORT DENSITY(53,000 lb - PER TRAILER),GRADE 7 NEWS	35(PICKED-UP)	TRUCK	LONG TERM/ SPOT MKT.	
YCLING SPECIALISTS SEY CITY , NY	PREFERS BALED, MINIMAL CONTAMINATION	0	TRUCK	LONG TERM	MAY PROVIDE TRANSPORTATION,AND CONTAINERS FOR A COST,MAY HELP WITH AN EDUCATION PROGRAM
AS PAPER V YORK , NY	N/A	N/A	TRUCK	LONG TERM	MAY PROVIDE EQUIPMENT AND TRANSPORTATION FOR A COST
ONTE & SONS V YORK , NY	BALED ,LOW QUALITY IS LESS REVENUE	VARIES	TRUCK, RAIL	LONG TERM	MAY PROVIDE TRANSPORTATION
PAPER STOCK TRAL ISLIP, NY	LOOSE, CLEAN	10	TRUCK	LONG TERM	MAY PROVIDE TRANSPORTATION,AND CONTAINERS FOR A COST,WILL TAKE BALED OCC ALSO
RECYCLING CORP RDEN CITY PARK, NY	LOOSE	20	TRUCK	LONG TERM	MAY PROVIDE CONTAINERS, WILL TAKE BALED OCC ALSO

URCE : MALCOLM PIRNIE INC. MARKET SURVEYS .

MATERIAL MARKET SURVEY FOR TIRES

NAME	MATERIAL QUALITY REQUIREMENTS	PRICE ($)	TRANSPORTATION	CONTRACT PREFERENCE	OTHER
The Tire Pond North Haven, CT	Whole tires (w/rims),tubes, truck tire flaps, other rubber tires	17.50 per cy 80.00 per ton	truck	short-term	Adding shredding system to produce granulated rubber; Provide containers at no charge
Pol-X Inc. Hopelawn, NJ	Passenger tires only, good inner casings, no punctures, rejects up to 90 % of tires	varies	truck	N/A	Grind off old rubber to remold new tires Very high standards
Metropilitan Rubber Products New York, NY	Passenger tires (w\ or w\out rim), truck tires (w\out rims)	1.10 per tire	truck	short-term	Reprocessed into rubber products; Grind rubber into half-inch product; Provide containers at a nominal cost
New York Tire Recycling Kings Park, NY	Passenger tires (w\ or w\out rim), inner tubes, truck tires	10.00 per cy 95.00 per ton	truck or rail	short-term	Chip material to a one-inch product
Coletta Recycling Corp. Far Rockaway, NY	Passenger tires only (no rims)	76.00 per ton	truck	long-term	Tires are processed upon delivery; Reports that facility is exempt from DEC permit Can provide containers if needed Less than 500 tires at one time and only by appointment

Source: Malcolm Pirnie Inc. Market Survey .

APPENDIX R-L

POTENTIAL MARKET LISTING FROM THE NYSDED

New York State Department of Economic Development

Office of Recycling Market Development

One Commerce Plaza
Albany, New York 12245 518 486-6291
FAX: 518 474-1512

Notice to All Readers:

The following are lists of recycling markets for the materials that you specified. "Markets" include materials brokers, intermediate processors/recyclers and end-users, who are usually manufacturers.

The following lists are not intended to be all-inclusive and other companies may exist which we are not aware of.

Please note that the enclosed lists do not constitute a New York State Department of Economic Development or Office of Recycling Market Development endorsement of any firm or its particular business activities. These lists are provided for information purposes only.

Furthermore, the firms listed may be required to obtain permits from the NYS Department of Environmental Conservation (DEC). For permit status or other regulatory information, contact the appropriate regional DEC office.

Neither the State of New York, nor the Department of Economic Development shall be liable, financially or otherwise, to persons or firms for any losses, including loss of profit, indirect, special or consequential damages, or costs or expenses incurred in connection with the use of, or reliance upon, any information contained in, or derived from, this list of recycling markets.

The information in this market listing is neither an offer to sell, nor a solicitation of an offer to buy, recyclable materials. The Department of Economic Development makes no guarantee that the information is correct, nor can it be held liable for any incorrect information presented.

Inquiries and changes may be directed to the attention of Brenda Oettinger, Market Information Specialist, Office of Recycling Market Development, NYS DED, One Commerce Plaza, Room 950, Albany, NY 12245 (518)486-6291.

If you have any comments on the information and services you have received through our office, we'd like to hear from you. Please write to us at the above address to the attention of William Ferretti, Director.

PAPER

"Markets" include materials brokers, processors and end-users, who are often manfacturers of recycled products. For your information, **ONP** is old newspapers, **OCC** is old corrugated cardboard, **OMG** is old magazines, and **CPO** is computer print-out paper. Kraft paper and bags, ONP, OCC, OMG and mixed papers, are "low grades" of paper. "High grades" include all office papers, like ledger papers, CPO, and xerographic.

Projects:

To discuss these and other potential outlets, contact Outreach Specialists Ed Campbell or Robin Fitzpatrick at (516)349-1266.

* Kruger Recycling Inc., Albany, was built to process paper for Kruger's parent mills in Canada. The processing facility is sourcing ONP, OCC, office waste paper and OMG for de-inking.

* A joint venture for Waste Management Inc. and Stone Container Co. called Paper Recycling International will take all grades of waste paper from any municipal and commercial customer to sell to mills in the US and throughout the world. Call William Moore at (404)621-6759 or Dick Gordon at (716)891-6300.

* Southern Container Corp., the nation's largest independent corrugated converter, will build a greenfield mill in Camillus, NY, to produce 100,000 tpy of recycled linerboard, corrugating medium and recycled bag stock from 100% OCC.

* Westfield Containerboard is moving ahead on its plans top build a 250,000 - 300,000 ton per year recycled linerboard mill in Westfield, NY (Chatauqua Co.)

* Ponderosa Fibres of America, Inc. is moving ahead with plans to locate a mini-newsprint de-inking mill in the Harlem River Yard Section of the Bronx. For further info about the project, contact Charlie Donnelly of Castagne Communications, (212)730-1266, the company's PR firm; or Robin Fitzpatrick, ORMD Outreach Specialist, at (516)349-1266.

Publications/Reference:

* American Recycling Market Directory/Reference Manual provides market lists. It is available for a fee from Recoup Publishing Ltd, PO Box 577, Ogdensburg, NY 13669 (800) 267-0707.
* Lockwood-Post's Directory of the Pulp, Paper and Allied Trades is a good resource on wastepaper dealers and papermills using wastepaper and is available in many public libraries.

Trade Associations:

* Institute of Scrap Recycling Industries, Inc. (ISRI), 1325 G St., NW, Washington, DC 20005 (202)466-4050.
* American Paper Institute (API), 260 Madison Ave., New York, NY 10016 (212)340-0600. Contact Peter Bunten.
* Magazine Publishers of America (212)752-0050. Contact Judy Jorgnsen.

PAPER

Paper--NYC/LI
Perry H. Koplik and Sons
505 Park Ave.
New York, NY
(212)752-2288
Contact: Bernie Cornick
Broker. Paperstock and OCC. Call for specifics.

Apex Waste Paper Recycling
218 E. Third St.
New York, NY 10009
(212)966-0955
Contact: Joseph Verzi

Atlas Paper Co.
589 Washington
New York, NY 10014
(212)925-3280
Contact: John Ormasa
Processor. Takes OCC and other paper grades. Prefers materials baled or at least bundled. Will arrange for transport.

Benedetto Inc.
420 Lexington Ave.
New York, NY 10017
(212)867-8484; (212)370-0878
Contact: Peter Benedetto or Charles Rotante
Broker/Packer/Dealer. All grades of paper, including OCC. Will arrange to pick up. No minimum, however, whether or not you are paid depends on the grade of material and the amount you supply.

F & N Wastepaper Inc.
304 W. 39th Street
New York, NY 10018
(212)947-4810
Contact: Nick Mormando
Broker/Packer/Dealer. Take OCC and other paper. Will pick up, no minimum needed, but will charge for service. Call for details.

R2B2
1809 Carter Ave.
Bronx, NY 10457
(212)731-3921
Contact: Mike Schedler
Processor. Takes all grades from anyone, delivered.

V. Ponte & Sons
511 Canal St.
New York, NY 10013
(212)966-5420
Contact: Jose Vegerano, Purchasing Manager or, Anthony Ponte
Processor/Broker. Will pick up and contract for high grades,

book stock, ONP, and baled OCC. Minimum 1/2 ton. Will take all grades of source separated paper. Will take mixed high grades. They prepare the paper for use at their chipboard mill in Clifton, NJ.

Gagliano Recycling Co.
357 West 16th Street
New York, NY 10011
(212)242-2013
Contact: Ralph Gagliano or Jo DeLuca
Processor. Will take all high grade paper and OCC. It should have no contaminants. They will contract, but they will not pickup. All paper must be delivered, and somehow bundled.

V. Monteleone & Co.
770 Barry Street
Bronx, NY 10474
(212)589-3880
Broker/Dealer/Packer of all grades. Specialize in CPO.

Petroco Inc.
One Penn Plaza, Suite 3424
New York, NY 11019
(212)629-4500
Contact: Jeff Davis
Broker/Exporter. Will contract and pick up a minimum of 100 tons/wk of CPO (per PS-86) within 500 miles of east or west coasts. Takes baled low grade paper, ie OMG, but must meet spec from PS-86.

A and R Lobosco Inc.
31-33 Farrington Street
Flushing, NY 11354
(718)358-2098
Contact: Michael
Processor/Broker/Packer. Only baled OCC. Will contact.

All County Recycling Corp.
438 Livingston Ave.
Babylon, NY
(516)321-1496
Contact: Richie Velocci
Processor. Only OCC. Must deliver it loose, bundled or baled.

Brookhaven Recycling & Waste, Inc.
36 Potter Ave.
Patchogue, NY 11772
(516)475-4788
Contact: Mario Savino
Processor/broker/packer. Accepts all grades of paper, loose, baled or bundled. Will contract, will transport. Is flexible, however prefers to pickup at least a trailer load from the LI/NYC region. Will provide containers. Leases/sells processing equipment and will provide free recycling service to equipment customers. No carbon paper, garbage or plastics mixed in. (It is also called Olympic Fibers, (516)736-5600)

Canterbury Industries of America
40 Glen Street
Glen Cove, NY 11542
(516)671-7100
Contact: Spencer Sharwell, Owner
Processor. Handles high grades and OCC.

DeMatteo Salvage Co., Inc.
90 Gleam Street
West Babylon, NY 11704
(516)643-7940
Contact: Domenick DeMatteo
Recycler/Exporter. Will contract for and pick up all grades.

East End Recycling Assoc.
116b Hampton Rd.
South Hampton, NY 11968
(516)283-6000 Ext. 293
Processor/MRF. Contract for paper and OCC. Will not pick up.

Harmon Associates Corp.
86 Garden Street
Westbury, NY 11590
(516)997-3400
Contact: Bill Eisenreich
Processor. High grades and OCC.

IPF Recycling Corp.
151 Fulton Ave.
Garden City Park, NY 11040
(516)746-7575
Contact: Purchase Mgr.
Processor. Will contract for and pick up at least 2 tons/wk of baled boxboard, linerboard, and OCC that is sold to paper mills.

Star Recycling
50-19 69 Place
Woodside, NY 11377
(718)779-4650
Contact: Charles Gusmano
Processor. They will contract for and pick up a minimum of a truckload of OCC, loose or baled.

Jet Paper Stock
228 Blydenburg Road
Central Islip, NY 11722
(516)234-7100
Contact: Fred
Processor. Contract for and pick up in Suffolk Co. all high grades, no coated stock or directories. Will take OCC and ONP. OCC must be baled, no wax. All paper must be separated by grade. It can be loose, bundled or baled. Hampers/bins are provided. Prefer at least 2 containers/week. (Jet Paper Stock and Westbury Paper Stock are the same. Westbury covers Nassau, Brooklyn and Queens.)

Liberty Ash
112 Phylis Ct.
Elmont, NY 11003
(718)526-1465
Contact: Michael Bellino
Processor. Contract for and pick up OCC. Also take whole directories for use as boiler fuel or for sale to manufacturers.

All State Paper Recycling Inc.
137 Rockville Ave.
Staten Island, NY 10314
(718)720-8484
Contact: Frank Giasi
Processor. Contract for truck loads; loose or baled and delivered. They take all grades of paper and OCC, except for ONP.

Omni Recycling
50 Charles Lindberg Blvd.
Uniondale, NY 11553
(516)222-0709; (516)333-5741 (plant)

Security Paper Recycling Co.
17307 Liberty Avenue
Jamaica, NY 11433
(516)352-6361 or (718)739-6893
Contact: Ed or John or Tommy
Processor. Will pick up on LI, in Queens and Brooklyn, and contract for high grade office paper, CPO, tab cards and baled OCC. For pickup, they require at least 1 ton. They provide containers.

USA Recycling
PO Box 348 Lawrence Ave.
Kings Park, NY 11754
(516)368-5533
Contact: Dan McDonald
Processor.

S. Durante & Son
260 42nd Street
Brooklyn, NY 11232
(718)768-1155
Processor. Paper stock dealer.

Apple Fibers Inc.
444 Greenwich St.
New York, NY 10013
(212)226-7150
Contact: Anthony Vitale Jr.
Processor. Will contract for and pick up a minimum of 5 tons of clean, baled: ONP #6, OCC, white and colored ledger and CPO.

Rutigliano Paper Stock, Inc.
854 Shepherd Ave.
Brooklyn, NY 11208

(718)257-0244

Bollag & Co. Inc.
212-75 Whitehall Terrace, PO Box 28123
Queens Village, NY 11427
(718)523-7900
Processor. Paper stock dealer.

Giove Co. Inc.
108-20 180th Street
Jamaica, NY 11433
(718)657-5200
Processor. Paper stock, packaging--all grades.

Jamaica Paper Stock Corp.
172-33 Douglas Ave.
Jamaica, NY 11433
(718)526-4648

SISCO Traders Inc.
150 Nassau Street
New York, NY 10038
(212)732-3585
Brokers. All grades paper, CPO & telephone books.

R.B. Fibers, Inc.
401 Woodmere Ave.
Woodmere, NY 11598
(718)849-7500
Processor. Paper mill suppliers.

Paper--Hudson Valley
American Independent Paper Mills Supply Co.
155 South Depot Plaza
Tarrytown, NY 10591
(914)631-8285
Contact: Louis Quintano, VP or Paul Baselice, VP
Processor. ONP, OCC, and high grades.

Recycle Material Co.
70 Don Bosco Pl., PO Box 1588
Port Chester, NY 10573
(914)939-3813
Contact: Michael Martinelli.

NJ:
Garden State Paper Mill
River Drive Center 2,
Elmwood Park, NJ 07407
(201)796-0060
Contact: C.C. Millett
Manufacturer. The mill is always looking for sources of clean, No. 6 ONP in the NE. It is prefered loose, but will discuss baling.

Bruno & D'Elia, Inc.
Paper Recycling Centers (supply GSP):
109 McKinley St., Hackensack, NJ 07601 (201)487-0050
209 Division St., Hackensack, NJ 07601 (201)487-0050
355 Meadow Rd, Edison, NJ 08817 (201)985-7432
246 Ridgedale Ave., Cedar Knolls, NJ 07927 (201)540-8886
845 Towbin Ave., Lakewood, NJ 08701 (201)364-5055
244 E. Union Tpke., Wharton, NJ 07885 (201)328-7080
Iron Mtn. Rd., Mine Hill, NJ 07801 (201)366-0340
1000 Port Carteret Dr., Carteret, NJ 07008 (201)541-4456

Marcal Paper Mills, Inc.
Market Street
Elmwood Park, NJ 07470
(201)796-4000
Contact: Nadine Mariconda
Manufacturer. Will contract for and pick up OMG and mixed paper. Will spot a trailer at locations with large volumes.

VIC-BARRICK Paper
140 Logan Ave.
Jersey City, NJ 07306
(201)434-3340
Broker/Processor. Will contract for and and pick up OMG on the east coast. Can be bundled, loose or baled.

Caraustar Industries, Inc.
267 Jefferson Ave.
Camden, NJ 08104
Manufacturer. Takes mixed paper, ONP, and OCC.

US Gypsum Co.
1255 Raritan Rd.
Clark, NJ 07066
Manufacturer. Mixed paper, ONP, OCC and pulp substitutes.

Mafcote Industries
93 North Ave.
Garwood, NJ 07027
Manufacturer. Takes ONP, OCC and mixed.

Davey Co.
164 Laidlaw Ave.
Jersey City, NJ 07308
Manufacturer. Takes mixed papers.

Newark Boxboard Co.
60 Lockwood St.
Newark, NJ 07105
Manufacturer. ONP, OCC and mixed.

Celotex Corp.
PO Box 289 Keasby
Perth Amboy, NJ 08332

Manufacturer. Makes roof products with mixed papers.

Lowe Paper Co. (Simkins)
River St., PO Box 239
Ridgefield, NJ 07657-0239
Manufacturer. ONP, OCC and pulp subs.

Homasote Co.
PO Box 7240
W. Trenton, NJ 08628-0240
Manufacturer. Use ONP for cellulose insulation.

Chesterfield Paper Co.
2 Forest Ave.
Paramus, NJ 07652
(201)843-1234
Processor. Buyers for mill direct shipment. Takes bales, skids or rolls of OCC and high grade papers.

Masotina (NY Office: Intermark Fibers Corp.)
580 Sylvan Ave.
Englewood Cliffs, NJ 07632
(201)568-4886
Exporter. Sell all grades of paper stock to Italy and Europe.

Prins Recycling Corp.
Ft. Lee, NJ
(201)886-1600
Processor. ONP & OCC.

The Alamo Paper Co.
930 Woodland Ave.
Plainfield, NJ 07060
(201)668-1444
Processor/Recycler. All grades of waste paper.

Atlantic Coast Fibers
(201)614-9600
All grades of waste paper.

CT:
Hellman Trading Co., Inc.
PO Box 156, 420 East Main Street
Branford, CT 06405-0156
(203)481-7286
Broker. Handles all wastepaper.

Hershman Recycling Inc.
Baybrook Station, PO Box 16251
West Haven, CT 05616
(203)933-9879
Paper stock dealer.

GLASS

For more market listings, you may want to obtain a copy of the American Recycling Market Directory/Reference Manual from Recoup Publishing Ltd, PO Box 577, Ogdensburg, NY 13669 or (800) 267-0707.

Mixed Cullet:

* The NYC Office of Recycling at the Department of Sanitation is using mixed-colored cullet in its asphalt. Call Gene Moore at the NYC Office of Recycling at (212) 837-8179.
* The National Standard Plumbing Code Office has included mixed cullet pieces smaller than 3/4" as acceptable aggregate in storm drains.
* Stoneware Tile Co., Richmond, IN, uses plate glass and windshields to make commercial ceramic tiles with 70% recyc content. They're marketed by New Age Carpets, Englewood, CO.

Trade Associations:

* Institute of Scrap Recycling Industries, Inc. (ISRI), 1627 K Street, NW, Washington, DC 20006 (202) 466-4050.
* Glass Packaging Institute (GPI), 1801 K St., NW, Suite 1105L, Washington, DC 20006 (202) 887-4850. Contact Sylvia Swanson.
* National Soft Drink Association, Solid Waste Management Dept., is at 101 16th St., NW, Washington, DC 20036 (202) 463-6700.

GLASS

Glass--NYC/LI

EWG Glass Recovery and Recycling
173-07 Liberty Ave.
Jamaica, NY 11433
(718)739-7270
Contact: Ed Golebiewski
Processor. Provides 30-yd container for monthly, color-sorted loads. Need guarantee to provide transport up to 200 miles.

All State Paper Recycling, Inc.
137 Rockville Ave.
Staten Island, NY 10314
(718)720-8484
Contact: Frank Giasi
Processor. Will contract for color-sorted, green and clear glass (no brown). Minimum is 300 lbs. Must be ground or whole.

Tri County Recycling or Ecosphere of LI
(516)935-5800
Contact: Dick Petrarca
or, Chesner Engineering, Inc., (516)449-1085
Processor. System that allows mixed-color cullet to be removed from post-consumer mixed waste and used in glasphalt and concrete.

R2B2 (Recoverable Resources/Boro Bronx 2000)
1809 Carter Ave.
Bronx, NY 10457
(212)731-8666
Contact: Mike Schedler
Processor. Must be color sorted and contaminant free.

Boro Recycling. Inc.
54-35 48th St.
Maspeth, NY 11378
(718)482-7180
Contact: Joseph Luzzi
Processor. Take color-sorted glass. Will negotiate on transport.

Omni Technical Service, Inc.
50 Charles Lindbergh Blvd.
Uniondale, NY 11553
(516)222-0708
Contact: Tom Bolton
Processor. Accepts glass at the plant is in Westbury. Color separation of glass is not necessary; they separate it.

New York City, MRF
44 Beaver St., 6th floor
New York, NY 10004
(212)837-8179
Contact: Gene Moore
Processor. Accepts color-sorted, clean glass. Won't pick up.

Schneider Coal & Trucking, Co., Inc.
Miller Place Rd.
Middle Island, NY 11953
(516)924-4414
Contact: Dave Shneider
Processor. Accepts delivered glass.

B J Toughy & Son
24 James Pl.
Staten Island, NY 10305
(718)720-8594
Contact: Bernard Toughy
Broker/processor. Accepts whole bottles of all colors from the northeast, loose or in gaylord boxes.

Ursula Products, Inc.
636 Brooklyn Ave.
Brooklyn, NY 11203
(718)363-1007
Contact: A.B. Heron
Broker. Accepts all kinds of recyclables, including glass.

Glass--Hudson Valley
J. Bass & Son, Inc.
9-11 Carleton Ave.
Mount Vernon, NY 10550
(914)667-1442
Contact: Michael Bass.
Processor.

Recycling Industries Corp.
524 Waverly Ave.
Mamaroneck, NY 10543
(914)698-0404
Contact: Carl Lacavalla, VP
Processor. Will contract and pick up.

King Road Materials
145 Cordell Rd.
PO Box 12699
Albany, NY 12212
(518)382-5353
Contact: Phillip Groff
Manufacturer. Contract for supplies of glass for road paving applications. Minimum duration is one year. Container glass must be clean of food residues. May be whole or crushed. Color separation not necessary. Window pane glass is also accepted, provided it is not mixed with container glass and does not include frames.

Central New York Bottle Co., Division of Miller Brewing
RD#6 County House Rd.
Auburn, NY 13021
(315)255-5203
Contact: Joe Runkle

Manufacturer. Will contract for 1 year for clean, color-sorted container glass, delivered. As of 5/15/91, CNY Bottle was still taking green glass and paying for it. Use glass to make bottles.

Anchor Glass Container Corp.
1901 Grand Central Ave.
Elmira, NY 14902
(607)737-3531
Contact: Duane Nielsen
Manufacturer. Color-separated clear and brown glass (no longer taking green glass as of 1991). Uses glass to manufacture bottles.

Owens/Brockway Glass
RD#5, Great Bear Rd.
Fulton, NY 13069
(315)598-0931
Contact: Bill Anton
Or, contact: Brian Houger (315)598-0900).
Manufacturer. Takes glass for their manufacturing process. Must be color separated and clean, with metal rings, closures, or other contaminants removed. Negotiations can be arranged with the local Owens' recycling coordinator.

NJ
Pace Glass Co.
73-75 Cornelison Ave.
Jersey City, NJ 07728
(201)432-7983
Contact: Vincent Pace/Ginny Collorec

Anchor Glass
PO Box 557
Clifford, NJ 07721
(201)566-4000
Contact: Louise Abbrizzese
Manufacturer. Contract for and pick up color-sorted glass containers, loose or crushed. No ceramic, plate or other glass.

Ball-Incon Glass Package Corp.
1 Minue St.
Carteret, NJ 07008
(201)969-1400
Contact: Kevin Shipley
Manufacturer. Make soft drink bottles. Will contract and pick up color-sorted flint glass only.

PLASTIC

For more market listings, you may want to obtain a copy of the American Recycling Market Directory/Reference Manual. The 1991 edition cost $125, and is obtainable from Recoup Publishing Ltd, PO Box 577, Ogdensburg, NY 13669 1-800-267-0707.

Trade Associations:

* The Partnership for Plastics Progress (formerly Council for Solid Waste Solutions) 1275 K St., NW, 3rd fl., Washington, DC 20005 (202)371-5319 Contact: Jeri Huntley; or (800)243-5790. Call Kimberly Vollbrecht in Albany, (518)432-7835.

* National Assoc. for Plastic Container Recovery, 5024 Parkway Plaza, Suite 200, Charlotte, NC 28217 (704)523-8543.

* Plastic Bottle Information Bureau, (202)371-5244. Contact Deanne Dillingham.

* Institute of Scrap Recycling Industries (ISRI), (202)466-4050. Contact Robert Garino.

* Vinyl Siding Institute (Vinyl siding is made from rigid PVC), (212)351-5400. Contact Annette.

* The National Polystyrene Recycling Co. has a toll-free hotline for questions on PS recycling: (800)696-6965.

* Canadian Polystyrene Recycling Association, 415 Yonge St., 10th fl., Toronto, Ontario M5B 2E7.

* Polystyrene Packaging Council, 1025 Connecticut Ave., NE, Washington, DC 20036 (202)822-6424.

* Assoc. of Foam Packaging Recyclers (AFPR), 1025 Connecticut Ave, NW, Suite 515, Washngton, DC 20036 (800)944-8448.

* Plastic Loose-Fill Producers Council: (800)828-2214.

* Council on Plastics and Packaging in the Environment (COPPE), 1001 Connecticut Ave., NW, Suite 401, Washington, DC 20036 (202)331-0099.

Companies:

* Browning-Ferris, Inc.'s recycling Hotline: (800)542-7780.

* Union Carbide, (201)563-6080.

* Goodyear's Public Relations Office, (216)796-2572.

Regarding the recycling of polystyrene, the Plastics Again Company, formerly in MA, no longer exists. However, its NYS contact was Damon Georgia of Genpak Corp., Glens Falls. Call him with questions at (518)798-9511.

PLASTICS

Plastic--NYC/LI
A A A Polymer Inc.
68 Freeman
Brooklyn, NY 11222
(718)389-2498
Contact: Rich Kralstein
Processor. Takes low density polyethylene (LDPE) used bags.

AJS Systems Inc.
170 Express Street
Plainview, NY 11803
(516)349-9400
Contact: Bernie Taylor
Processor/Exporter. AJS accepts HDPE, LDPE film and bags, and PP in repro, regrin, rolls and bales. They need samples in advance to determine acceptable contamination levels.

All State Paper Recycling Inc.
137 Rockville Ave.
Staten Island, NY 10314
(718)720-8484
Contact: Frank Giasi
Processor. Will contract for truckloads of loose or baled HDPE and PET, colored or clear, delivered.

Amco Plastic Materials
595 Broadhollow Rd.
Farmingdale, NY 11735
(516)293-1600
Contact: Gary Metzger
Processor/Broker. Accepts most plastics: styrofoam, PET, HDPE and LDPE, poly propylene, PVC, etc.

Boulder Resources Ltd.
507 West 27th Street
New York, NY 10001
(212)565-0222
Contact: Anthony Veziano or Leonard Formato
Processor. Will contract for and pick up truckloads of HDPE: loose, baled, shredded, etc.

Brooklyn Union Gas/Utility Plastics
195 Montague St.
Brooklyn, NY 11201
(718)403-2000
Contact: Bill Howell
Manufacturer. Make traffic barriers and safety devices. Use HDPE, PET, PVC and PP. May take them mixed. Call for details.

Browning-Ferris Industries
600 Avenue C at Stewart Ave.
Westbury, NY 11590
(516)222-1050

Den Enterprises, Inc.
857 Lincoln Ave.
Bohemia, NY 11716
(516)567-7303
Contact: George Victor
Processor/Broker. Will not contract but will pick up a minimum of 1 ton of ABS to be used for extrusion and molding.

Debco Plastics, Inc.
14 Maple Pl.
Freeport, NY 11520
(516)379-2470
Contact: Dave Garfinkel
Processor/Exporter. Will contract for and pick up a minimum of 10,000 lbs. of most plastic resins, including ABS, acrylics, PET, HDPE, LDPE, PS, etc. They must be baled, boxed or in gaylord boxes, either unground or regrind.

E.G. Plastics Corp.
116 39th Street
Brooklyn, NY 11232
(718)788-3733
Contact: Sol Strimber, Controller
Manufacturer/Processor/Exporter. Will contract for and pick up PET, LDPE and PVC to make poly pellets. Only pre-consumer.

Goldmark Plastic Compounds, Inc.
Nassau Terminal Rd.
New Hyde Park, NY 11040
(516)352-4373
Contact: David Weir
Broker/Exporter. Accepts all processed plastic flake, pellets or regrind. Call for details.

H. Heller and Co.
707 Westchester Ave.
White Plains, NY 10604
(914)682-0010
Broker/Processor. All resin types.

Kaiser International Inc.
One World Trade Ctr., Suite 7967
New York, NY 10048
(212)466-6000
Contact: Vijay Vora
Exporters. Will contract for and pick up a minimum of one ton of clean ABS, HDPE, nylon and most other plastics: either film, regrind, pellets or parts, in the NE.

Kenny Plastics Corp.
41-40 Union St., Suite 15C
Flushing, NY 11355
(718)762-4681
Contact: Kenny Cha, President

Kravitz Enterprises, Inc.
57 Glen Street
Glen Cove, NY 11542
(516)676-6190
Contact: Dave or Ava Kravitz
Processor/Broker/Exporter. Will contract for and pick up a minimum of 700 lbs of regrind, pellets or clean resin-separated, color-separated plastics of any type in bags or gaylords. The co. is particularly interested in engineering resins.

M.G. Chemical Co.
PO Box 304, Bowling Green Station
New York, NY 10274
(212)269-5533
Contact: Aswhin G. Kirshna
Processor/Broker/Exporter. Will contract for and pick up truckloads of clean, compressed baled resins.

National Waste Technologies
934 Easton Street
Ronkonkoma, NY 11779
(516)588-4545
Contact: Carl Lanza
Manufacturer. Makes plastic lumber products from patented Syntol in all colors from HDPE and LDPE.

Nicon Plastics, Inc.
4-11 47th Ave.
Long Island City, NY 11101
(718)392-1177
Contact: Leslie Miller
Processor. Will contract for and pick up truckloads of clean, baled plastic soda bottles.

Omni Technical Services, Inc.
50 Charles Lindbergh Blvd.
Uniondale, NY 11553
(516)222-0709
Processor.

G.Y. Group, Inc.
3 Roundtree Dr.
Melville, NY 11747
(516)491-7240
Contact: George Zong Yao, President
Exporter. Sending recyclable, post-industrial plastic films to China and bringing recycled resins back to the US. Will sign long-term contracts for 2000 mt/mo (will expand to 3000 mt/mo).

Sabre Recycling Corp./Sterns Plastic Products
206 Babylon Turnpike
Roosevelt, NY 11575
(516)379-5124

Plascal Corp.
361 Eastern Parkway
Farmingdale, NY 11735
(516)249-2200
Contact: Gerald Zimand, President
Manufacturer. Uses PVC plastic.

R2B2 (Bronx 2000)
1809 Carter Ave.
Bronx, NY 10457
office (212)731-3931; plant (212)731-3921
Contact: Mike Schedler
Processor. Accept PET and HDPE containers, delivered.

Star Recycling, Inc.
50-15 69th Place
Woodside, NY 11377
(718)779-4650
Processor.

TRIMAX of LI
2076 Fifth Ave.
Ronkonkoma, NY 11779
(516)471-7777
Contact: Tony Noto, President
Manufacturer. Makes plastic lumber.

Ursula Products, Inc.
636 Brooklyn Ave.
Brooklyn, NY 11203
(718)363-1007
Broker/Exporter.

USA Recycling, Inc.
110 Old Northport Rd.
Kings Park, NY 11754
(516)368-5533
Processor.

Suzanne Transport
PO Box 668, Rte. 94
Florida, NY 10921
(914)651-3055
Contact: Bob Wierzbicki
Processor. Was the ps collection point for southern NY.

CT:
Hafner Industries
Box 3925 Amity Stn.
New Haven, CT 06525
(203)397-1562
Contact: Edwin Hafner
Broker. Will pick up a minimum of a truckload of HDPE, PET, PVC, or any resin, baled, loose or ground, in North America.

Plastics Recovery Corp.
PO Box 7080
New Haven, CT 06519
(203)785-0458
Recycler. Defvelops recycling programs for commercial, industrial and municipal sites.

NJ:

Nicon International Corp
A-11 Dayton Square
Dayton, NJ 08810
(201)329-6342
Contact: Michael Saggese
Broker/Exporter. Will contract for and pick up truckloads of clean, uncontaminated PVC.

American National Can
135 National Rd.
Edison, NJ 08817
(908)287-6691
Contact: Bob Meyers
Broker/Manufacturer. Will negotiate pick up of at least a truckload of HDPE or PET bottles, ground, shredded or flaked.

Wellman Plastics
1040 Broad, Suite 302
Shrewsbury, NJ 07702
(201)542-7300
Contact: Caroline
Processor/Manufacturer. Looking for sources of PET, HDPE and more. Will negotiate transport.

Union Carbide Chemicals and Plastic Co., Inc.
Plastics Recycling Center
PO Box 670
Bound Brook, NJ 08805
(201)563-6080
Contact: Diane Mensinger
Manufacturer. Will contract for and negotiate transport for baled PET and HDPE bottles. They may also be taking films and blow-molded products.

M.A. Polymers Div.
410 Spruce Ave.
Garwood, NJ 07027
(201)789-1772
Contact: Gene Triano
Recycler. HDPE, PET and PP.

CRInc. Recycling
Bridgeport, NJ
Recycler. A National Polystyrene Recycling Co./CRInc. Recycling facility that can handle 13 million lbs of ps from throughout the eastern seaboard (opened 11/13/91).

POLYDEX, Inc.
PO Box 398
Lakewood, NJ 08701
(201)905-9335
Contact: Bert Albert
Recycler. Will contract for and pick up, east of the Mississippi, a minimum of five tons of ABS, acetal, acrylic, HDPE, LDPE, nylon and most plastics: either ground, shredded or in parts for resale.

Chemicals and Plastics Company, Inc.
1 River Road
Piscataway, NJ 08854
(201)563-6080
Processor. HDPE & PET.

Slamahs Enterprises
206 Main Street
Hackettstown, NJ
(201)852-2112
Contact: Linda Stadtler
Processor. Sourcing hard plastics (HDPE, PET, PVC) and storing them for a new facility in PA.

WPAR
PO Box 2140
West Paterson, NJ 07424
(201)256-7519
Contact: Don Sling, Purchasing Mgr.
Processor. Will contract for and pick up loose HDPE, PET and other bottle plastics. Also takes LDPE baled.

PA Plastics and Trading
1118 North Ave.
Plainfield, NJ 07062
(201)561-1919
Contact: Paul Frino
Processor. Will contract for and pick up HDPE dairy bottles, PET and other rigid containers, baled. Need 12-ton truckloads.

Lion Extruding Corp.
106 Rutherford St.
Newark, NJ 07105
(201)344-4648
Contact: Gary DeMarco
Exporter. Will contract for and pick up acetal, acrylic plastics in gaylord boxes or drums.

Materials for Recycling
225-239 Ridgewood Ave.
Newark, NJ 07108
(201)242-1731
Contact: Michael Riotto
Processor. Contract for and pick up bottles from in the NE.

Source Metals, Inc.
PO Box 237
South Orange, NJ 07079
(201)763-6021
Contact: Jerome Glasser
Recycler. Takes primarily PVC plastic, but also PET and HDPE. Also takes non ferrous metals.

Full Circle Plastics
PO Box 988
Lodi, NJ 07644
(201)473-9656
Contact: Mark Loeffelman
Processor. Will pick up LDPE and LLDPE film, bottles, shreds or flakes in the NE. Can be packaged almost any way.

Bar Industries
PO Box 396
Brick, NJ 08723
(201)905-8966
Contact: Bert Albert
Recycler. Will contract for and pick up a minimum of 5 tons of HDPE and LDPE parts, shredded, or ground in the Eastern US and SE Canada. Materials must be either in gaylords, drums or bales.

CVM, Inc.
261 Bellwood Rd.
Asbury, NJ 08802
(201)479-6655

TIRES/RUBBER

Publications:

* Scrap Tire News is a useful reference on tire recycling, and other market outlets for used tires. Contact Mary Sikora at (203)668-5422 for additional information.
* Rubber and Plastics News is a newsletter published by Crain Communications. Each December, they also publish, the Rubbicana, a listing of rubber product manufacturers. Call 1-800-992-9970 for subscription info.

Trade Associations:

* The National Tire Dealers and Retreaders Association, 1250 I St., NW, Suite 400, Washington, DC 20005 (202) 789-2300. Contact Harvey Brodsky, manager of the Tire Retread Information Bureau.
* Scrap Tire Management Council, 1400 K St., N.W., Washington, D.C. 20005 (202) 682-4842. Call Mike Blumenthal.
* Rubber Manufacturers Association, RMA, at 1400 K Street, NW, Washington, DC 20005. The general information number is (202)682-4800. John Serumgard is the trade association's vice president related to tire recycling.

Recycling Projects:

* The NYS DOT is now mandated by State Executive Order to determine what it would take to use recycled glass and rubber in roadways. At DOT's Material's Bureau, contact Wayne Brule, (518)457-3240.
* Also, DOT hired ARE Inc., Riverdale, MD, to complete an assessment of the use of scrap tires in asphalt. They subsequently published the following two reports:
  Shook, J.F. Experimental Construction of Rubber-Modified Asphalt Mixtures for Asphalt Pavements in New York State, Final Report, ARE Inc. Engineering Consultants for the NYS DOT, Contract #D005072, Riverdale, MD 5/16/90.
  Shook, J.F., H.B. Takallou, and E. Oshinski. Evaluation of the Use of Rubber-Modified Asphalt Mixtures for Asphalt Pavements in New York State, Final Report, ARE Inc. Engineering Consultants for the NYS DOT, Contract #D005072, Riverdale, MD 12/89.
* Tires processed on LI at the NY Tire Recycling Co. were used in a 3,000-foot section of 2 lanes of the William Floyd Pkwy. Call Don Middleton at (516)462-2222 with questions.

Tire incineration/resource recovery:

* ORMD does very little work related to resource recovery. For information about facilities that use t-d-f, call IPPNY, the Independent Power Producers of NY (IPPNY), at (518)436-3749. Also, the State Department of Environmental Conservation's Resource Recovery Bureau may also have information that will help you. Call Jeffrey Schmitt at (518)457-7337.
* Oxford Tire, a division of Oxford Energy, Route 169 Pomfrit Center, CT 06259 (203)928-1905, uses processed tires for fuel. For collection, contact Oxford Tire Supply, 40 East

Dudley Town Rd., Bloomfield, CT 06002 (800)873-8473. Oxford recently received financing for a 49.5 megawatt tire-to-energy project in Moapa, NV.

* Oxford Energy Co., eastern regional office, 114 State St., Boston, MA 02109 (617)732-9443. Oxford Tire Recycling of Massachusetts, 1809 Main St., Walpole, MA 02081 (617)769-4760.

* New York State Electric and Gas Co. will chip tires for use as a fuel supplement at its Jennison Station electric generating facility in Chenango County.

Markets:

* Asphalt Rubber; Athletic & Recreational Surfaces; Export; Fuel; Mats/Molded Rubber Products; Flooring & Roofing products; Irrigation/Water Systems; Railroad Crossings; and Tubes.

TIRES

Tires--NYC/LI
Coletta Recycling Corp.
1629 Redfern Ave.
Far Rockaway, NY 11691
(718)327-4740
Contact: Mike Coletta
Processor. Shreds tires into 1/2" chips and sells them to companies for molding and regrind. Also working with Baker Rubber to produce crumb for product manufacture. Takes about 100,000/mo.

Refuse Management Systems, Inc.
99 Tulip Ave., Suite 303
Floral Park, NY 11001
(516)354-1212
Contact: Harvey Podolsky
Exporter. Exclusive US broker to solicit whole or baled passenger or truck tires for tdf at a new plant in Pakistan. Will contract. Has a transfer station in Brooklyn. Charges a fee.

Environmental Services Group, Inc.
310 East 46th Street
New York, NY 10017
(212)286-1772
Contact: Donna Murray or Peter Bronner
Processor. They can pick up assorted tires, or will spot a 40', open top container. Accepts up to 100,000 tires per month.

Transinternational Tire Recycling and Energy
2940 Ocean Avenue
Brooklyn, NY 11235
(718)615-1708
Broker. Occasionally markets tires overseas.

Ursula Products, Inc.
636 Brooklyn Ave.
Brooklyn, NY 11203
(718)363-1007
Broker. Occasionally buy tires and sell them overseas.

Waste Transfer Systems (subsidiary of Waste Management)
(516)756-5670
Contact: Paul Schubert
Transfer. Send tires to their NJ plant. Some are chipped and used for landfill leachate drainage systems in place of stone.

JP Tire
Flower Field Industrial Park, Bldg. 2, Suite 20
St. James, NY 11780
(516)696-7255
Contact: Patricia Libardi
Broker/Transporter. Sends bias tires to F&B Enterprises, New Bedford, MA for processing and product manufacture.

Recoverers of Manufactured Products
RD#8, 49 Maple Drive
Middleton, NY 10940
(914)361-5972
Contact: Frank Rezac
Transporter. Monthly pickup service to four NY counties. Transports tires to Oxford in Sterling, CT.

NJ:
Recycling Specialists
375 Routes 1 and 9
Jersey City, NJ 07306
(201)547-4100
Contact: John Chiala
Recycler/Broker. Will contract with municipalities and pick up whole tires in the northeast. Scrap tires are used for various, non-burning purposes.

Integrated Tire of Newark, NJ
182 Calcutta St.
Port Newark, NJ 07114
(201)578-8733
Processor. Shreds tires and sells tires primarily to Greece for use as tire-derived fuel.

TIREC Systems, Inc.
PO Box 6867
Polhemus, NJ 08807
(201)826-7597
Processor. Shreds and buries whole passenger and truck tires them for future use when new technologies are developed.

Institute Sales
RD#3, Box 552
Lafayette, NJ 07848
(201)579-5959
Manufacturer. Use walls and treads from biasply tires to manufacture floor mats. Currently recycles 25,000/yr.

Wade Salvage Inc.
293 Jackson Rd.
Atco, NJ 08004
(609)767-2760
Contact: Andrew Wade
Processor/Exporter. Will contract for and pick up rubber inner tubes for processing and export. No hazardous contaminants. Can be boxed, loose, baled or on skids.

CT:
Tire Salvage DBA/The Tire Pond
PO Box 825
North Haven, CT 06473
(203)288-5604
Contact: Jim Rizzo

Recycler. Will deal with municipalities and pick up whole tires (with rims). Sells for use in the manufacture of floor mats, and erosion control devices.

American Rubber Mat
North Haven, CT
(203)230-8875

Recycler. Located adjacent to the Tire Pond and produces crumb rubber to manufacture a range of products, including mats, truck flaps, bed liners, etc.

Tire Recycling
40 E. Dudley Town Rd.
Bloomfield, CT
(203)242-6241

Oxford Tire Supply, Inc.
1414 Norwich Rd.
Plainfield, CT 06374-1931
(203)564-7800
Contact: Bill Delaney

Recycler/Manufacturer. Will contract and pick up whole tires for use in asphalt or for energy. Accepts a minimum of 1.5 tons for pick up. Accept them loose or in trailer loads.

METALS

Additional Market Listings:

* American Recycling Market Directory/Reference Manual, Recoup Publishing Ltd, PO Box 577, Ogdensburg, NY 13669 (800)267-0707. The 1991 edition cost $125.
* For additional markets downstate, contact the NYC Office of Recycling at the Department of Sanitation at (212)240-4812.
* The Suffolk County Dept. of General Service's Recycling Unit published A Directory of Companies that Handle Recyclables in 4/90 that may be useful for identifying markets. Contact the County Executive's Office, (516)360-4000.

Trade Associations:

* Institute of Scrap Recycling Industries, Inc. (ISRI), is affiliated with all ferrous, non-ferrous, paper and plastics recyclers. Contact Robert Garino at Suite 1000, 1325 G St., NW, Washington, DC 20005 (202)466-4050 to request Scrap Specifications Circular 1990--Guidelines for Ferrous Scrap, Nonferrous Scrap and Paper Stock.
* NYADD, the New York State Assoc. of Automobile Dismantlers, RD #6, Box 112, Binghamton, NY 13904 (607)775-1751. Although the dimantlers are not shredders, is treasurer, Gary Beagell, may have info on auto shredders at (607)775-1900.

Steel Cans and White Goods

* Steel Can Recycling Institute, Foster Plaza X, 680 Anderson Drive, Pittsburgh, PA 15220 (800) 876-7274. Contact Greg Crawford, director of recycling. Or, contact Paula Thompson, northeastern regional representative, SCRI, 97 Lowell Rd., Suite 1000, Concord, MA 01742 (508)371-2878.
* Steel Manufacturers Assoc. Contact Peter at (202)331-7027.
* Appliance Recycling Ctrs of America (ARCA) in St. Paul, MN.

Lead

* Lead Industries Association, Inc., 295 Madison Ave., New York, NY 10017 (212)578-4750.

Aluminum

* Aluminum Recyclers Association (primarily smelters), 1000 16th St., NW, Washington, DC 20036 (202)785-0951. Contact Sanford Moskowitz, technical director.
* Aluminum Association (manufacturers), 900 19th Street, N.W., Washington, DC 20006 (202) 862-5100. Contact Frank Rathbun.
* Aluminum Foil Container Manufacturers Assoc., Contact: Julia Meretta, Paula Filipello, or Sally Adelstein, (312)337-7400.

Beverage Containers

* National Soft Drink Assoc., Solid Waste Management Dept., 1101 16th St., NW, Washington, DC 20036 (202) 463-6700.
* Niagara Mohawk subsidiary, Planergy, Inc., is running a "Refrigerator Roundup" in Central NY and in the Mohawk Valley. Call (800)836-1010 to schedule a pick up of your old refrigerator. If it qualifies, they will pay you $50.

METALS

Metals--NYC/LI:

American Nature International Inc.
120 West 45th St., Suite 303
New York, NY 10036
(212)642-3549
Contact: Dr. Peter Lu.
Exporter/Broker. Looking for large quantities of scrap aluminum to ship overseas.

Ameropan Oil Corp.
6500 Jericho Tpke
Syosset, NY 11791
Contact: Peter Wittich
Processor. Will contract for and pick up non-ferrous metals.

Refuse Management Systems, Inc.
99 Tulip Ave., Suite 303
Floral Park, NY 11001
(516)354-1212
Contact: Harvey Podolsky
Exporter. US broker to solicit auto shredder residue for use as a fuel at a new plant in Pakistan. Will contract. Has a transfer station in Brooklyn. Charges a fee.

Boulder Resources, Ltd.
507 West 27th St.
New York, NY 10001
(212)563-0222
Contact: Anthony Veziano or Leonard Formato
Processor/Broker. Will contract for and pick up truckloads of ferrous, non-ferrous, tin cans and white goods for processing. Can be loose, baled, shredded, etc.

Bronx 2000 (R2B2)
1809 Carter Ave.
Bronx, NY 10457
(212)
Contact: David Hurd
Processor. Accepts tin cans and aluminum UBCs, delivered.

Bronx Iron & Metals
850 Edgewater Rd.
Bronx, NY 10474
(212)-542-2300
Contact: Peter Manzi
Recycler. Accepts all ferrous metals and non-ferrous metals.

Brookhaven Recycling
36 Potter Ave.
Patchogue, NY 11772
(516)475-4788
Contact: Michael Savino

Broker/Processor. Will contract for and pick up large loads of non-ferrous metals.

Brookhaven Town MRF
3233 Route 112
Medford, NY 11763
Contact: Elaine McKibbon
(516)451-6211
Processor/MRF. Takes ferrous metals, including white goods and tin cans, and non-ferrous metals. Will pick up.

DeMatteo Salvage
90 Gleam Street
West Babylon, NY 11704
(516)643-7940
Contact: Domenick DeMatteo
Processor. Will contract for and pick up ferrous and non-ferrous metals, white goods and all grades of paper.

Dobrofsky & Co. Inc.
1145 Webster Ave.
Bronx, NY 10456
(212)590-4330
Contact: Martyn Wolf
Processor. Will contract for and pick up non-ferrous metals.

East End Recycling Assoc.
116 Hampton Rd.
South Hampton, NY 11968
(516)283-6000 Ext. 293
Processor/MRF. Will contract for white goods, ferrous and non-ferrous metals, delivered.

Gershow Recycling Corp.
PO Box 526, 71 Peconic Ave.
Medford, NY 11763
(516)289-6188
Processor. Will contract for and pick up non-ferrous metals.

Glantz Iron and Metal Inc.
44 South 8th Street
Brooklyn, NY 11211
(718)782-3358
Processor. Will contract for and pick up non-ferrous metals for sale to mills and refineries.

Hunter Douglas Metals
98 Cutter Mill Rd.
Great Neck, NY 11021
(516)487-7428
Contact: Gil Waltzler
Manufacturer/Broker/Exporter. Will contract for and pick up 18-20 tons of clean, crushed or shredded, non-ferrous metals, baled, in briquettes or bisquits or loose.

Liberty Ash
112 Phylis Ct.
Elmont, NY 11003
(718)526-1465
Contact: Michael Bellino
Broker. Will contract for and pick up ferrous metals, including white goods and tin cans, and non-ferrous. Can take no more than 1,000 tpd. No capacitors.

NYC Dept. of Sanitation MRF
44 Beaver St., 6th floor
New York, NY 10004
(212)837-8179
Contact: Gene Moore
Processor/MRF. Takes tin/steel cans and UBCs, delivered.

WE CAN
(212)262-222
Contact: Guy

Overseas Development Corp.
380 Lexington Ave.
New York, NY 10017
(212)682-7975
Contact: Larry Grudman
Exporter/Broker. Contract for truckloads of ferrous between 4-10 feet. They can be loose, delivered in RR Cars. Will contract for truckloads of non-ferrous in drums or gaylords, delivered.

Aruvil International Inc.
185 Madison Ave., Suite 1001
New York, NY 10016
(212)685-0555
Contact: Vilas Kulkarni
Broker/Exporter. Looking for large supplies of UBCs, baled for shipment in a 20-ton container.

Pascap Co. Inc.
4250 Boston Rd.
Bronx, NY 10475
(914)725-3300
Contact: Ralph, Pat or Frank Capasso
Processor.

Rush Recycling Inc.
24 Gaymor Lane
Commack, NY 11725
(516)543-4535
Contact: David Rush
Processor. Will contract for and pick up ferrous metals

Schiavone Bonomo Corp.
850 Edgewater Rd.
Bronx, NY 10474

(212)542-2300
Contact: Peter Manzi
Processor. Will contract for and pick up ferrous and non-ferrous metals.

Schioppo Corp.
197 Grandview Ave.
Staten Island, NY 10303
(718)448-1444
Contact: Catherine Schioppo
Processor. Will contract for and pick up loose cast iron in the NY/NJ/CT area. Also will contract for and pick up whole turn aluminum in the same areas.

Victory Scrap Metal Co.
166 East 34 St.
New York, NY 10016
(212)481-5444
Contact: Jeffrey Baskin
Processor/Broker. Will contract for and pick up at least 5 tons of ferrous metals in the NE. Must be in drums, roll-offs or some container. Sells to mills and smelters. Also will contract for and pick up at least 1 ton of non-ferrous solids, turnings, stampings in the NE, either in drums, bales or gaylords.

Star Recycling Inc.
50-19 69th Place
Woodside, NY 11377
(718)779-4650
Contact: Charles Gushmano
Processor. Will contract for and pick up non-ferrous metals in the NE for shipment overseas or to mills.

Sumitomo Corp. of America
345 Park Ave., 14th floor
New York, NY 10154
(212)207-0619
Contact: Craig Tuckman
Exporter/Manufacturer. Will contract for and pick up truckloads of non-ferrous aluminum on the East or West coasts of the US. Can be in gaylords, baled or loose.

County Recycling
Lincoln Place
Mt. Kisco, NY 10549
(914)241-3990
Processor.

Elcan Corp.
59 Plain Ave.
New Rochelle, NY 10801
(914)236-1061
Contact: Werner Oppenheimer

Karta Container
1011 Lower South Street
Peekskill, NY 10586
(914)739-5094
Contact: Kenneth Cartalemi (914)737-9017
Processor. Will contract for and pick up truckloads of ferrous and non-ferrous metals.

J. Bass and Son, Inc.
9-11 Carleton Ave.
Mount Vernon, NY 10550
(914)667-1442 (-1443)
Contact: Michael J. Bass
Processor. Pick up truckloads of tin cans, white goods and aluminum UBCs within 100 miles; loose, baled, or crushed. Also accepts non-ferrous aluminum for remanufacture, loose or baled.

Recycling Industries Corp.
524 Waverly Ave.
Mamaroneck, NY 10543
(914)698-0404
Contact: Carl Lacavalla
Processor. Will contract for and pick up ferrous and non-ferrous metals.

NJ:
ALCOA Recycling Co.
Raritan Center, 100 Clover Place
Edison, NJ 08837
(201)225-9550
Contact: Beth Lanning
Manufacturer/Processor. Wants UBCs to recycle. Price depends on volume, processing and transportation. ALCOA will spot a flattener/blower and trailer at supplier sites if 5,000 lbs/month is guaranteed. For communitities generating 800-1000 lbs/mo., ALCOA will spot a wagon for storage. Contamination, including glass, plastic, paper, dirt, etc., is unacceptable. UBCs must be dry (if cans contain >4% moisture a deduction off gross weight is taken. ALCOA prefers municipal suppliers leave UBCs loose and flattened or whole. When quantity is guaranteed, ALCOA accepts UBCs densified (preapproval required). Baled UBCs are accepted for new programs only. ALCOA accepts UBCs delivered, or will provide transport. There's a 48-hour scheduling policy for the pick-up and delivery.

Schiabo Corp.
8-18 Noble St.
Newark, NJ 07114
Contact: Frank Claps
Recycler. Ferrous. Car shredder.

NIMCO Shredding
PO Box 5152
252 Doremus Ave.

Newark, NJ 07105
Ferrous. Car shredder.

Borough Auto Salvage
2271 Hamilton Blvd.
South Plainfield, NJ 07080
(201)756-3585
Contact: Kelly Errickson
Recycler/Processor. Will contract for and pick up white goods in bales or containers.

Green Acres Recycling Center
23 Double Trouble Rd.
Bayville, NJ 08721
(201)349-0112
Contact: Joseph Zaccaro
Processor. Contract for and pick up white goods on the NE seaboard.

Shoemaker & Lynch, Inc.
Box 195A, Route 519
Belvidere, NJ 07823
(201)475-1155
Contact: Howard Shoemaker
Will contract for and pick up whitegoods and bi-metal cans.

Pace Glass, Inc.
73-75 Cornelison Ave.
Jersey City, NJ 07304
(201)432-7983
Contact: Vincent Pace
Takes aluminum cans and glass.

CT:
MAC Industries
1320 Kings Highway Cutoff
Fairfield, CT 06430
(203)259-9776
Contact: Paul Uhrynowski
Scrap metals.

Northeast Utilities/ARCA
Hartford, CT
(203)525-2722
Contact: Bob Kowalchik, Manager of ARCA Hartford, with questions about ARCA.
Contact: Bruno Ranniello, NE Utilities, (203)665-5746, with questions about NE Utilities role.
Recycler. Accepted 12,000 refrigerators (white goods) as part of the Appliance Recycling Centers of America's recycling network with area utilities. Although they subcontract to area utilities, and will only accept old appliances from within those areas, they are beginning to work with New York State utilities.

BATTERIES

Battery recycling markets include brokers, processors and end-users. The following list is not all-inclusive. Please refer to the "Yellow Pages" of the phone directory under "Scrap dealers - Non-ferrous" for more listings.

The Battery Council International, is the trade association representing about 95% of the US' lead battery manufacturers and recyclers. BCI is at 401 North Michigan Ave., Chicago, IL 60611-4267 (312)644-6610.

Chapter 152 of New York's Laws of 1990 established a system of collection and recycling for lead-acid batteries. It prohibits the disposal of such batteries in mixed municipal solid waste or otherwise, except by delivery to a retailer, distributor, collector or recycling facility. As a last resort, they can go to a hazardous waste facility authorized to take batteries.

Consumers who do not return used batteries to the retailer at the time a new battery is purchased must pay the retailer a return incentive payment of $5/battery sold. If consumers return a used battery within 30 days of a purchase, $5 shall be refunded. If no return is made the retailer keeps the the $5. The Law requires lead-acid battery retailers and distributors to accept up to two used batteries per month free of charge from any individual.

In general, lead-acid batteries will accepted back by garages (i.e. Sears, K-Mart) that change and sell batteries. Or, you can try scrap dealers who handle non-ferrous metals, including lead. They would be listed in your local telephone directory. For more information, contact your nearest Dept. of Environmental Conservation regional office.

Household batteries (mercury, nickel cadmium, etc) are not the easiest recyclable to find an outlet for. As far as is known to ORMD staff, there is one outlet in the NE: Mercury Refining.

The Environmental Action Coalition has set up a network in Manhattan, NYC for collecting "button cell" and rechargeable nickel cadmium household batteries for recycling. The following camera and hearing aid retailers will accept button and nickel cadmium rechargables:

* Advance Camera Corp., 15 West 46th Street;
* B and H Photo, 119 West 17th Street;
* Bi-Rite Photo Electric Co., 15 East 30th Street;
* Empire State Hearing Aids, 25 West 43rd Street;
* Kahgan Hearing Center, 318 East 70th Street;
* Professional Hearing Aid Labs, 501 Fifth Ave., #704;

EAC is also organizing collection at local schools and non-profit organizations. They hope to serve 50 sites by the end of 1991. EAC donates the batteries to the R2B2 battery recycling project in the Bronx.

BATTERIES

NYS: Household:
Mercury Refining
790 Watervliet-Shaker Rd.
Latham, NY 12110

Plant:
26 Railroad Ave.
Albany, NY 12205
Contact: Vicki Hart/David Cohen
(800)833-3505; (518)785-1703
Processor. Will contract for, but will not pick up household batteries (no lead acid) in lined, steel pails or drums. The recycle them for mercury recovery.

Lead Acid-NYC/LI:
ASARCO, Inc.
New York, NY
(212)510-2215

DeMatteo Salvage Co., Inc.
90 Gleam Ave.
West Babylon, NY 11704
(516)643-7940
Contact: Dominick DeMatteo
Exporter/Processor. Will contract and pick up lead acid batteries for recycling.

Liberty Ash
112 Phylis Ct.
Elmont, NY 11803
(718)562-1465
Contact: Michael Bellino
Processor. Contract for and pick up lead acid batteries.

MRF-Town of Brookhaven
3233 Route 112
Medford, NY 11763
(516)451-6211
Contact: Elaine McKibbon
Processor/MRF. Pick up lead acid batteries to be recycled.

East End Recycling Assoc.
116 Hampton Rd.
South Hampton, NY 11968
(516)283-6000 (ext. 293)
Processor/MRF. Contract for but not pick up, lead acid batteries.

Star Recycling
50-19 69 Place
Woodside, NY 11377
(718)779-4650

Contact: Charles Gushmano
Processor. Will contract for and pick up lead acid batteries to be sold to mills or exported. Batteries must be intact. They can be loose (not in containers).

Schioppo Corp.
197 Grandview Ave.
Staten Island, NY 10303
(718)448-1444
Contact: Catherine Schioppo
Processor. Will contract for and pick up in NY/NJ/CT, lead acid batteries to process for scrap metals. Need whole batteries.

J Bass & Son Inc.
9-11 Carlton Ave.
Mt. Vernon, NY 10558
(914)667-1442
Contact: Robert Bass
Processors. Will pick up truckloads of loose, whole lead acid batteries to be remanufactured that are within 100 miles.

NJ:

A&M Batteries
414 Spring Street
Elizabeth, NJ
(201)352-7222
Processor. Lead-acid batteries.

Allstate Battery
2140 Route 37 East
Toms River, NJ 08753
(201)270-1201

Bergen Metals
10 Hill Pl.
Bergenfield, NJ 07621
(201)384-9494
Contact: E. Monte
Processor/Broker. Will contract for and pick up lead acid batteries for their scrap value.

Green Acres Recycling Center
23 Double Trouble Rd.
Dayville, NJ 08721
(201)349-0112
Contact: Joseph Zaccaro
Processor. Contract for and pick up lead acid batteries.

Borough Auto Salvage
2271 Hamilton Blvd.
South Plainfield, NJ 07080
(201)756-3585
Contact: Kelly Errickson
Processor. Will contract for and pick up lead acid batteries to be sold to processors. They need them on pallets with binding.

RAGS/CLOTHES/FIBER

Fiber--New York State
SISCO Traders Inc.
150 Nassau St.
New York, NY 10038
(212)732-3585
Contact: Jack Finkel
Broker. Want new white all cotton or cotton/synthetic cuttings, knitted or woven colored polyester, and orlon cuttings, solid colored knitted cotton/synthetic cuttings

Atlantic Wool Waste Co.
19 Rockwell Place
Brooklyn, NY 11217
(718)875-0088
Contact: Louis Piller
Exporter/Processor. Will contract for and pick up wool, cashmere, mohair, and acrylic for reprocessing.

Scott Cynamon Textiles Inc.
102 Luquer Street
Brooklyn, NY 11231
(718)858-3065
Contact: Scott Cynamon
Broker. Will contract for and pick up used clothing and fabrics of all kinds for export.

North Atlantic International Ltd.
1320 Ave
Bronx, NY 10474
(212)991-1200
Broker/Exporter. Institution and residential mixed rags.

Mill Sanitary Wiping Cloth
40 Bruckner Blvd.
Bronx, NY 10454
(212)585-7300
Contact: David Pasquale
(212)585-7300
Processor/Manufacturer. Contract for and pick up at least 1000 lbs. of all fiber in NE. It must be baled, boxed or in bags.

Other States:
Marchisell Brothers, Inc.
319 Pine St.
Camden, NJ 08103
(609)963-2040
Want institutional rags.

Hercules Fibres Corp.
10 Presidential Blvd. N
Bala-Cynwyd, PA 19004
(215)664-6300
Contact: Marvin Schwartz

Broker/Exporter. Will contract for and pick up all natural and synthetic fibers, and rags.

Reliable Industries, Inc.
194 Greenfield Rd.
Lancaster, PA 17601
(717)397-7695
Contact: Stanley Miller
Processor. Will contract for and pick up at least 1/2 truckload of Fabri-roll goods in cartons.

Sarlo, Inc.
15 Jenny Lane
Coraopolis, PA 15108
(412)771-2121
Contact: Robert Esposito
Processor/Exporter. Will contract and pick up in the east and mid-west any materials loose, in gaylords, or in bales.

Red Hill Corp.
PO Box 4234 122 Baltimore St.
Gettysburg, PA 17325
(800)822-4003
Contact: Arturo Ottolenohi
Broker/Exporter. Will contract for and pick up less than a truckload of baled cotton/nylon/pp fabric or fiber that will be reprocessed east of the Mississippi.

S. Levine & Sons
Old Route 22 Farm Bur Rd. Box 148
Allentown, PA 18105
(215)398-1437
Contact: Harris Malkousky
Processor. Will pick up trailer loads of cut materials and textiles in the NE, bagged or baled.

United Shredding Inc.
5102 Woodland Ave.
Philadelphia, PA 19143
(215)729-4300
Processor. Wants old foam rubber mattresses, cushions, and auto seats. They must be stripped of cloth, dry and baled.

Rivlin Brothers Inc.
PO Box 477,
Pottstown, PA 19464
(215)323-4422
Exporter/Processor. Sells used work uniforms.

Philadelphia Rag Co.
1937 South 3rd St.
Philadelphia, PA 19148
215-271-7474; 7475
Processor. Wants institution rags and scrap burlap.

CONSTRUCTION & DEMOLITION DEBRIS

Construction and Demolition debris include: Wood Waste, Paper Products, Concrete Products, Plastic, Metals, Roofing Materials, Earth (dirt), and miscellaneious materials. Some C&D wastes are unacceptable for recycling.

Recycling markets for C&D debris in and around New York are primarily intermediate processors. For recyclers looking for end-use markets it may be useful to talk to other processors to find out where they sell or recycle the materials they accept.

Trade Associations:

* Institute of Scrap Recycling Industries (ISRI), (202)466-4050. Contact Robert Garino.

* National Association of Demolition Contractors, (312) 449-5959. Contact William Baker, executive director.

* NYS Concrete Masonry Association, 6 Airline Drive, Albany, NY 12205 (518)869-3953 Contact: Gene Abbate, President.

CONSTRUCTION & DEMOLITION DEBRIS

C&D--LI/NYC
Twin Co. Recycling
Engel Street
Hicksville, NY 11801
(516)935-5800
Contact: Doug
Processor. They take road construction-related materials, i.e. asphalt, concrete. No wood or steel.

George's East End Recycling
PO Box 1529
Quoque, NY 11959
(516)653-6666
Contact: George Mathys
Processor. Take most construction debris, as well as wood. Call in advance.

BQE Services, Inc.
75 Thomas Street
Brooklyn, NY 11222
(718)963-4445
Contact: Joe Ciulla
Processor. Takes wood and C&D debris.

All Island Demolition Recycling
Old Dock Road
Yaphank, NY 11980
(516)924-2426
Processor.

Atlas Roll Off, Inc.
95-11 147th Place
Jamaica, NY 11435
(718)523-3000
Contact: Tom Polsinelli
Processor/Transfer station. Accepts brick, concrete, dirt, metals, paper, plastic and wood.

DeMateo Salvage, Inc.
90 Gleam Ave.
West Babylon, NY 11704
(516)643-7940
Contact: Domenick Dematteo
Processor/Exporter. Contract for and pick up C&D debris.

Duffy Thompson, Inc.
266 Route 109
Farmingdale, NY 11735
(516)293-6552

Jet Sanitation Service Corp./Island Recycling Corp.
228 Blydenburgh Road

Central Islip, NY 11722
(516)234-7100

Liberty Ash
112 Phylis Ct.
Elmont, NY 11003
(718)526-1465
Contact: Michael Bellino
Processor/Broker. Will contract for and pick up no more than 100 tons/day of C&D. No hazardous materials.

National Demolition Corp.
290 Old Northport Road
Kings Park, NY 11754
(516)269-6700

North Shore Express Excavation and Roll-Off Service, Corp.
84 Rocky Point Road
Sound Beach, NY 11789
(516)744-6518

Rapid Demolition Recycling, Inc.
153 Peconic Ave.
Medford, NY 11763
(516)654-8844

Red Hook Recycling
640 Columbia St.
Brooklyn, NY 11231
(718)935-9565
Contact: Michael Cosola

Star Recycling, Inc.
50-15 69th Place
Woodside, NY 11433
(718)779-4650
Contact: Charles Gusmano
Processor. Contract for and pick up mixed and crushed dirt/concrete, wood and metals in the NE. Loose or baled.

USA Recycling, Inc.
110 Old Northport Road
Kings Park, NY 11754
(516)368-1007

Goodman Bros. Steel Drum, Inc.
18-20 Division Place
Brooklyn, NY 11222
(718)782-3056; 3057
Contact: Irving Goodman
Processor. Accepts steel drums for recycling.

Municipal Recycling Assoc.
3 West Main Street

Elmsford, NY 10523
(914)347-3360
Contact: Angelo Rubbo

Industrial Recycling Systems
PO Box K
Croton-on-Hudson, NY 10520
(914)271-2175
Processor. Will contract and pick up uncrushed, whole, or short-size C&D debris, uncontaminated railroad ties and telephone poles. Min.: 10 tons; Max.: 100 tons.

JM Assoc.
225 Railroad Ave.
Bedford Hills, NY 10507
(914)241-1540
Contact: John Manfredi
Transfer station for C&D. Will arrange for transport.

Karta Recycling
1011 Lower South Street
Peekskill, NY 10566
(914)737-9211
Contact: Pat or Kenneth Cartalemi
Processor/MRF. Takes all C&D, white goods, and metals.

Recycling Industries Corp.
524 Waverly Ave.
Mamaroneck, NY 10543
(914)698-0404
Contact: Carl Lacavala
Processor. Will contract for and pick up C&D debris.

NJ:

Bergen Metals
10 Hill Place
Bergenfield, NJ 07621
(201)384-9494
Contact: E. Monte
Processor/Broker. Will contract for and pickup C&D debris.

A.E. Stone, Inc.
PO Box 101
Pleasantville, NJ 08832
(609)641-2781
Contact: Bob Frank
Processor. Will contract for gravel, wood, concrete, ripped asphalt, and building rubble, delivered. No treated wood, fuel contaminants, or putrecibles. Access to hwy., rail and water.

Clayton Recycling Center
1025 US Highway 1
Edison, NJ 08817
(201)549-1234
Contact: John Barr

Processor. Will contract for concrete waste, delivered. Access to highway and rail.

Recycling Specialists
375 Routes 1 & 9
Jersey City, NJ 07306
(201)547-4100
Contact: John Chialia
Processor. Will contract for and will pick up in the NE. No food waste. Access to rail, highway and water.

Winzinger Recycling Systems
1704 Marne Hwy.
Hainesport, NJ 08036
(609)267-8600
Contact: Heidi Winzinger
Processor/Manufacturer. Will contract for clean concrete (no soil), asphalt, bricks, tree stumps, delivered in dumpsters.

CT:
Stapleton Recycling
83 Quarry Rd.
Trumball, CT 06611
(203)374-4741
Contact: Christopher Stapleton, President
Processor/Manufacturer. Accepts waste concrete, masonry block, brick and asphalt, for a tipping fee. Prefers asphalt separate from other materials. Makes into aggregate.

OIL REREFINERS/REPROCESSORS

Oil--NYC/LI
Akba Waste Oil
3836 Hahn Ave.
Bethpage, NY 11714
(516)731-3924
Contact: Lucy Duffy
Accept 55 gal drums for charge.

JK Waste Oil Service
280 Grand Blvd.
Deer Park, NY 11729
(516)666-7615

Chemical Mgmt Inc.
340 Eastern Pkwy
Farmingdale, NY 11735
(516)454-7677
Contact: George Keil
Handles small amounts and recommends you use General Waste.

General Waste Oil
9 Garrison Ave
Wyandanch, NY 11798
(516)491-1444
Contact: Glen Bonelli
Accepts for processing.

A B Oil Service
29 Florence Ave.
Smithtown, NY 11787
(516)361-9757
Contact: Catherine

Certified Waste Oil
171 Brompton Rd
Garden City, NY 11530
(516)481-1354
Contact: Jim
Pick up from stations only, not a processor.

Manhattan Oil Service
21-11-A 46th
LI City, NY 11105
(718)728-7119

Aquanetics Inc
111 Milbar Blvd
Farmingdale, NY 11735
(516)454-7600
Contact: Haig Hachadoorina
Manufactures oil processing equipment only. For, recycling info., contact them to find out who their clients are.

Breslube, USA Inc. (a division of Safety-Kleen)
PO Box 637
Floral Park, NY 11002
(516)775-2867
Contact: Mike Sommer

Sid Waste Oil
91 South Liberty
Jamaica, NY 11417
(718)738-2744
Contact: Frank LaRusso
Accepts oil and will pick up from service stations.

J B Waste Oil
18-18 41st
LI City, NY 11105
(718)726-0135 or
(718)-626-4161
Contact: Don
Processor.

Joseph Fontana
Dunrite Oil Service
10 Dare Rd.
Seldon, NY 11784

Buckner Waste Oil Service
PO Box 4053
New Windsor, NY 12553
(914)534-4259
Contact: Ronald Buckner
Rerefiner. Handles all kinds of waste oil. Will contract and pick up at least a truckload of drums or storage tanks.

Environmental Recycling Assoc.
16 Wilson Rd.
Monroe, NY 10965
(800)526-5335
Contact: Sal (dispatcher) or Frank Capano (driver).

Liberty Ash, Inc.
112 Phylis Ct.
Elmont, NY 11003
(718)526-1465
Contact: Michael Bellino
Will contract. Will pick up non-hazardous materials. Reused as boiler fuel, for rubber and wood.

MRF-Town of Brookhaven, NY
3233 Route 112
Medford, NY 11763
(516)451-6211
Contact: Elaine McKibbon
Collector. Will contract with municipalities and pick up.

NJ:
Loeffels Waste Oil Service
2 Camden Pl.
West Milford, NJ 07480
(201)728-3441
Contact: Richard Loeffel
Will pick up and contract with communities in the NE for used oil without water, no PCBs or hazardous contaminants. Must be in drums.

MA:
Clean Harbor Inc.
325 Wood Rd.
Braintree, MA
617-849-1800
1-800-422-8998
Contact: Customer Service: John Sullivan or Marty Kokler
(617)849-1800 ext. 4414; or
Contact: Mark Brennan, Director of Oil Recycling

COMMERCIAL COMPOSTING OPERATIONS

Compost--NYS
OMNI Technical Services, Inc.
50 Charles Lindbergh Boulevard
Uniondale, NY 11553
(516)222-0708
Contact: John D. Cameron, Jr., PE, President

Gerster Farms
PO Box 109
White Plains, NY 10603
(914)948-2330
Contact: Fred Feit
Processor/Manufacturer. Accepts small wood pieces, paper, food waste and other biodegradables for a compost operation. The farm's in Delaware Co.

Productive Recycling
1870 Pond Road
Ronkonkoma, NY 11779
(516)467-2229
Contact: Ronald Edgar

Compost--Other States
International Process Systems, Inc.
Salmon Brook Corporate Park
655 Winding Brook Dr.
Glastonbury, CT 06033
(203)657-3447
Contact: Geoffrey A. Kuter, Ph.D., Senior VP

ALLGRO INC.
655 Winding Brook Dr.
Glastonbury, CT 06033
(203)657-3447
Contact: Peter Mezitt

Earth Gro
Box 143
Lebanon, CT 06249
(203)642-7591
Contact: Chris Field

Bedminster Bioconversion Corp.
52 Haddonfield-Berlin Rd. Suite 400
Cherry Hill, NJ 08034
(609)795-5767
Contact: Paul T. Hoyle, VP for Marketing & Sales

American Soil Inc.
3141 Brodentown Ave.
Parlin, NJ 08859
(201)525-1103

COMPOSTS

As of 10/90, there were 42 composting facilities operating in NYS: 28 yard waste composting sites, three composted animal manure, nine sludge composting facilities, one pharmaceutical waste composting plant and one for composting brewery wastes.

Local Information:

For municipal governments that compost, the money saved from not having to purchase compost/fill for projects and the avoided costs of landfilling are compelling incentives. Therefore, local Depts. of Public Works, Transportation, and Parks and Recreation may be able to use compost locally-generated composts. However, it is unlikely that they will pay for it.

You can also speak with Joseph Stockbridge, Town of Colonie. The Town's compost project has been successful and the material is made available to area residents who want it. Apparently, there are lots of takers. His most recent accomplishment has been to attract many of the local, large supermarkets to deliver their food wastes. Stockbridge can be reached at (518)783-2827.

You should also check with local nurseries, particularly if you have wood chips, to see if they are interested in the material you generate. The executive director of the NYS Nursery and Landscape Association is Dan Barnhart. He may be reached at PO Box 115, Saratoga Springs, NY 12866 (518)583-3827. Also, the NYS Turfgrass Association is at PO Box 612, Latham, NY 12210 (518)783-1229 Contact: Elizabeth Seme.

State Level Information:

To talk to representatives at the State level, contact Charlie Nagel, landscape architect at the NYS Dept. of Transportation, (518)457-4460, or Tom Lyons, director of Environmental Management for Office of Parks, Recreation and Historic Preservation at (518)474-0409.

On 11/15/91, NYS DOT issued Engineering Instruction (#91-27) for revised topsoil specifications with information and guidance on recycled and/or composted organic materials. DOT is also revising sections on wood chips, humus/peat, rotten manure and peat moss to accomodate recycled and/or composted materials. Contact Mark Woods, Landscape Architect, at (518)457-4460.

The Landscape Specialist for the NYS Thruway Authority is Bernie Williams. He can be reached at (518)436-2946.

Judy Jarnefeld of the New York State Energy Research and Development Authority (NYSERDA) has been overseeing several projects concerning composting, mulching and soil amendments:

* Two studies related to the use of septage, in composing in the Town of Thompson and in the Town of Lloyd.

* The City of Plattsburgh looked at the use of alternative bulking agents for composting.

* Tompkins County is co-composting with yard waste and using the resultant material to produce sod.

* SUNY College of Environmental Science and Forestry, Syracuse, NY is experimenting with verma composting and conversion of sludge.

The City of Potsdam looked at the implications of composting used animal bedding made from old newsprint as part of a NYSERDA project supervised by Tom Feisinger. Feisinger also analyzed, with Barry Commoner of Queens College, the compostable portion of waste from a 100-household recycling study in East Hampton, LI.

Early in 1992, Protor & Gamble announced with National Audubon that they would work together on a study of the amount of compostable materials generated in the average CT home. Call Christine Indoe at National Audubon, (212)546-9200 or Kelly Lewis from P&G, (513)983-1118, for more information.

Feel free to contact ORMD with questions about composting operations and technologies in the Northeast. For NYC/LI, call (516)349-1266.

Publications:

* Guide to Recycling and Composting Projects in New York State, by the NYS Conference of Mayors and Other Municipal Officials, 119 Washington Ave., Albany, NY 12210 (518)463-1185. This publication describes composting operations in Ithaca, Scarsdale, Oneida, Hamburg, Potsdam, and Mineola. You may wish to speak with representatives of these municipalities to find out what they do with the product.

* The well-known journal, Biocycle, publishes The Biocycle Guide to Composting Municipal Wastes. Biocycle is published by JG Press, Inc., Box 351, Emmaus, PA. (215) 967-4135.

* Composting News is published monthly by Ken McEntee at 13727 Holland Road, Cleveland, OH 44142 (216)362-7979.

* Yard Waste Management: A Planning Guide for NYS became available in June 1990, by Richard L. Thomas of the Dept. of Agricultural and Biological Engineering at Cornell University; Nancy M. Dickson of Tellus Institute, Boston, MA; and Sally J. Rowland, PE of the Division of Solid Waste at the NYS Department of Environmental Conservation. It is a key planning guide for local officials and planners and has a terrific biography of other references on yard waste and composting. Contact Peter O'Toole at NYS DEC, 50 Wolf Rd., Albany, NY 12233-4013 with questions about or comments.

Research:

Research regarding composting is also available from the following sources:

Woods End Research Laboratory, Inc.
Old Rome Road Route 2, Box 1850
Mt. Vernon, ME 04352
(207) 293-2457
William Brinton, President

Cornell Cooperative Extension
Agriculture and Engineering
207 Rile Robb
Cornell University
Ithaca, NY 14853
(607) 255-2488
Thomas L. Richard, Ph.D.

NYS Energy Research & Development Authority
Two Rockefeller Plaza
Albany, NY 12223
(518) 465-6251, (X 293)
Judy Jarnefeld

Illinois Department of Energy and Natural Resources
325 W. Adams, Room 300
Springfield, IL 62704-9950
Contact: Terry Miller for compost project information
(217) 524-5454 (IL State University) Dept. of Agriculture

WOOD

Wood--LI/NYC

BQE Services, Inc.
75 Thomas St.
Brooklyn, NY 11222
(718)387-2794; (914)963-4445
Processor. Accepts all wood. BQE has a steady market, but primarily for rdf. Wood chips go to a RDF facility in Scranton, PA. (Joe Ciuello deals solely with chips, (717)925-2101).

Hubbard Sand and Gravel
1612 5th Avenue
Bayshore, NY 11706
(516)665-1005
Contact: Mark Kennedy
Processor. Clean wood only.

Star Recycling Inc.
50-19 69 Place
Woodside, NY 11377
(718)779-4650
Contact: Charles Gusmano
Processor. Contracts for and pick up clean wood in NE: No dirt, paint, or hazardous materials. It can be loose or packed.

Environmental Services Group, Inc.
310 East 46th Street
New York, NY 10017
(212)286-1722
Contact: Donna Murray or Peter Bronner
Processor. Accepts up to 15,000 telephone poles/mo. Also takes 150,000 railroad ties/mo. Will pick up, or will spot a 40', open top container.

Bronx 2000
Bronx, NY
(212)731-3931
Contact: David Muchnick
Recycler/Manufacturer. Uses wooden pallets to make "Environmental Classics," a line of furniture that includes folding charis, slat-back chairs and clocks for under $100.

Recycling Industries Corp.
524 Waverly Ave.
Mamaroneck, NY 10543
(914)698-0404
Contact: Carl Lacavalla
Processor. Will contract for and pick up, wood waste.

Gerster Farms
PO Box 109
White Plains, NY 10603
(914)948-2330
Contact: Fred Feit

Processor/Manufacturer. Accepts small wood pieces, paper, food waste and other biodegradables for a compost operation. The farm's in Delaware Co.

Industrial Recycling Systems
PO Box K
Croton-on-Hudson, NY 10520
(914)271-2175
Contact: Robert Liguori
Processor. Will contract for and pick up whole wood pallet crates from within a 75 mile radius.

NJ:
Rosetto Recycling, Inc.
1301 Route 37 West
Toms River, NJ 08755
(201)341-3333
Contact: Robert Dixon
Processor. Will contract for and transport all wood waste.

Dauman Pallet Corp
PO Box 385
Linden, NJ 07036
(201)862-3232
Contact: E. Lionel Ludmer
Processor/Manufacturer. Contracts for and picks up truck loads of wood for making chips, mulch and energy from up to 50 miles from NYC.

D & L Wood Products Inc.
US HWY 322
Swedesboro, NJ 08085
(609)467-5222
Contact: David Lepuerton
Processor. Will pick up wooden pallets for reuse.

Recycling Specialists
375 Routes 1 & 9
Jersey City, NJ 07306
(201)547-4100
Contact: John Chialia
Recycler/Broker. Contracts for and picks up in the NE all wood waste. Can have nails, but no lead paint, creosote, or other haz materials. Accepts it loose, in containers, or by truck load.

Delisa Pallet Corp.
91 Blanchard St.
Newark, NJ 07105
(201)344-8600
Contact: John Delisa
Processor. Will contract for and pick up wood waste in the NE which they make into chips/pallets. Can include nails. No hazardous contaminants/chemicals.

APPENDIX R-M

20-YEAR LIFECYCLE ANALYSES

TOWN OF SOUTHAMPTON
20-YEAR LIFE CYCLE ANALYSIS
CASE 1A: COMBINED IN-TOWN MSW/LEAF&YARD/FOOD WASTE COMPOSTING
WITH SUCCESSFUL COMPOST MARKETING

IN-TOWN PROCESSING REQUIREMENTS	YEAR 8	YEAR 9	YEAR 10	YEAR 11	YEAR 12	YEAR 13	YEAR 14	YEAR 15
INCOMING WASTE (1)								
Source Separated Recyclables (Tons)	18,544	18,955	19,365	19,776	20,181	20,589	21,005	21,429
Leaf/Yard/Food Waste (Tons)	19,346	19,740	20,141	20,544	20,938	21,341	21,752	22,171
Mixed Solid Waste/Other Recycling (Tons)	37,739	37,850	37,965	38,060	38,120	38,183	38,237	38,283
Total Incoming Waste	75,629	76,545	77,471	78,380	79,239	80,113	80,994	81,883
DEBT SERVICE (2)								
Combined MSW,Leaf,Yard,&Food Waste Composting and Recycling Facility	$1,227,100	$1,227,100	$1,227,100	$1,227,100	$1,227,100	$1,227,100	$1,227,100	$1,227,100
OPERATING COST (3)								
MSW Compost & Recyclables Extraction Operations	$2,008,100	$2,127,200	$2,253,500	$2,386,500	$2,525,200	$2,672,400	$2,828,000	$2,992,400
Source Separated Recycling Operations	$652,300	$700,100	$751,000	$805,300	$862,900	$924,400	$990,200	$1,060,700
Total Operating Cost	$2,660,400	$2,827,300	$3,004,500	$3,191,800	$3,388,100	$3,596,800	$3,818,200	$4,053,100
REVENUES (4)								
High Grade Compost	$0	$0	$0	$0	$0	$0	$0	$0
Recyclables	$231,200	$238,000	$245,000	$252,100	$259,200	$266,400	$273,900	$281,500
Total Revenues	$231,200	$238,000	$245,000	$252,100	$259,200	$266,400	$273,900	$281,500
IN-TOWN SYSTEM COST (5)	$3,656,300	$3,816,400	$3,986,600	$4,166,800	$4,356,000	$4,557,500	$4,771,400	$4,998,700
IN-TOWN SYSTEM UNIT COST ($/TON) (6)	48.30	49.90	51.50	53.20	55.00	56.90	58.90	61.00
LANDFILL REQUIREMENTS								
MATERIALS LANDFILLED (7)								
Rejects and Residuals (Tons)	13,590	13,630	13,670	13,700	13,720	13,750	13,770	13,780
Downtime Waste (Tons)	3,020	3,030	3,040	3,040	3,050	3,050	3,060	3,060
Unmarketed Compost (Tons)	0	0	0	0	0	0	0	0
Total Material Landfilled	16,610	16,660	16,710	16,740	16,770	16,800	16,830	16,840
LANDFILL DISPOSAL COSTS (8)	$1,382,100	$1,420,900	$1,460,800	$1,500,000	$1,540,300	$1,581,600	$1,624,000	$1,665,600
TOTAL COST OF ENTIRE SYSTEM (9)	$5,038,400	$5,237,300	$5,447,400	$5,666,800	$5,896,300	$6,139,100	$6,395,400	$6,664,300
TOTAL UNIT COST OF ENTIRE SYSTEM ($/TON) (10)	66.60	68.40	70.30	72.30	74.40	76.60	79.00	81.40

TOWN OF SOUTHAMPTON
20-YEAR LIFE CYCLE ANALYSIS
CASE 1A: COMBINED IN-TOWN MSW/LEAF&YARD/FOOD WASTE COMPOSTING
WITH SUCCESSFUL COMPOST MARKETING

IN-TOWN PROCESSING REQUIREMENTS	YEAR 1 (11)	YEAR 2	YEAR 3	YEAR 4	YEAR 5	YEAR 6	YEAR 7
INCOMING WASTE (1)							
Source Separated Recyclables (Tons)	15,384	15,990	16,613	17,061	17,409	17,750	18,143
Leaf/Yard/Food Waste (Tons)	11,955	13,946	15,956	16,949	17,617	18,318	18,824
Mixed Solid Waste/Other Recycling (Tons)	44,649	41,943	39,194	38,436	38,108	37,763	37,760
Total Incoming Waste	71,988	71,879	71,763	72,446	73,134	73,831	74,727
DEBT SERVICE (2)							
Combined MSW,Leaf,Yard,&Food Waste Composting and Recycling Facility	$1,227,100	$1,227,100	$1,227,100	$1,227,100	$1,227,100	$1,227,100	$1,227,100
OPERATING COST (3)							
MSW Compost & Recyclables Extraction Operations	$1,415,100	$1,467,100	$1,520,100	$1,602,900	$1,693,400	$1,789,400	$1,895,700
Source Separated Recycling Operations	$384,600	$419,700	$457,900	$493,800	$529,000	$566,300	$607,800
Total Operating Cost	$1,799,700	$1,886,800	$1,978,000	$2,096,700	$2,222,400	$2,355,700	$2,503,500
REVENUES (4)							
High Grade Compost	$0	$0	$0	$0	$0	$0	$0
Recyclables	$189,600	$195,400	$201,500	$207,500	$212,900	$218,300	$224,700
Total Revenues	$189,600	$195,400	$201,500	$207,500	$212,900	$218,300	$224,700
IN-TOWN SYSTEM COST (5)	$2,837,200	$2,918,500	$3,003,600	$3,116,300	$3,236,600	$3,364,500	$3,505,900
IN-TOWN SYSTEM UNIT COST ($/TON) (6)	39.40	40.60	41.90	43.00	44.30	45.60	46.90
LANDFILL REQUIREMENTS							
MATERIALS LANDFILLED (7)							
Rejects and Residuals (Tons)	16,070	15,100	14,110	13,840	13,720	13,590	13,590
Downtime Waste (Tons)	3,570	3,360	3,140	3,070	3,050	3,020	3,020
Unmarketed Compost (Tons)	0	0	0	0	0	0	0
Total Material Landfilled	19,640	18,460	17,250	16,910	16,770	16,610	16,610
LANDFILL DISPOSAL COSTS (8)	$1,374,800	$1,324,500	$1,268,600	$1,274,700	$1,295,800	$1,315,500	$1,348,400
TOTAL COST OF ENTIRE SYSTEM (9)	$4,212,000	$4,243,000	$4,272,200	$4,391,000	$4,532,400	$4,680,000	$4,854,300
TOTAL UNIT COST OF ENTIRE SYSTEM ($/TON) (10)	58.50	59.00	59.50	60.60	62.00	63.40	65.00

TOWN OF SOUTHAMPTON
20-YEAR LIFE CYCLE ANALYSIS
CASE 1B: COMBINED IN-TOWN MSW/LEAF&YARD/FOOD WASTE COMPOSTING
WITH LOW GRADE COMPOST MARKET FAILURE

IN-TOWN PROCESSING REQUIREMENTS	YEAR 1 (11)	YEAR 2	YEAR 3	YEAR 4	YEAR 5	YEAR 6	YEAR 7
INCOMING WASTE (1)							
Source Separated Recyclables (Tons)	15,384	15,990	16,613	17,061	17,409	17,750	18,143
Leaf/Yard/Food Waste (Tons)	11,955	13,946	15,956	16,949	17,617	18,318	18,824
Mixed Solid Waste/Other Recycling (Tons)	44,649	41,943	39,194	38,436	38,108	37,763	37,760
Total Incoming Waste	71,988	71,879	71,763	72,446	73,134	73,831	74,727
DEBT SERVICE (2)							
Combined MSW,Leaf,Yard,&Food Waste Composting and Recycling Facility	$1,227,100	$1,227,100	$1,227,100	$1,227,100	$1,227,100	$1,227,100	$1,227,100
OPERATING COST (3)							
MSW Compost & Recyclables Extraction Operations	$1,415,100	$1,467,100	$1,520,100	$1,602,900	$1,693,400	$1,789,400	$1,895,700
Source Separated Recycling Operations	$384,600	$419,700	$457,900	$493,800	$529,000	$566,300	$607,800
Total Operating Cost	$1,799,700	$1,886,800	$1,978,000	$2,096,700	$2,222,400	$2,355,700	$2,503,500
REVENUES (4)							
High Grade Compost	$0	$0	$0	$0	$0	$0	$0
Recyclables	$189,600	$195,400	$201,500	$207,500	$212,900	$218,300	$224,700
Total Revenues	$189,600	$195,400	$201,500	$207,500	$212,900	$218,300	$224,700
IN-TOWN SYSTEM COST (5)	$2,837,200	$2,918,500	$3,003,600	$3,116,300	$3,236,600	$3,364,500	$3,505,900
IN-TOWN SYSTEM UNIT COST ($/TON) (6)	39.40	40.60	41.90	43.00	44.30	45.60	46.90
LANDFILL REQUIREMENTS							
MATERIALS LANDFILLED (7)							
Rejects and Residuals (Tons)	16,070	15,100	14,110	13,840	13,720	13,590	13,590
Downtime Waste (Tons)	3,570	3,360	3,140	3,070	3,050	3,020	3,020
Unmarketed Compost (Tons)	19,650	18,450	17,250	16,910	16,770	16,620	16,610
Total Material Landfilled	39,290	36,910	34,500	33,820	33,540	33,230	33,220
LANDFILL DISPOSAL COSTS (8)	$2,750,300	$2,648,300	$2,537,300	$2,549,400	$2,591,500	$2,631,800	$2,696,800
TOTAL COST OF ENTIRE SYSTEM (9)	$5,587,500	$5,566,800	$5,540,900	$5,665,700	$5,828,100	$5,996,300	$6,202,700
TOTAL UNIT COST OF ENTIRE SYSTEM ($/TON) (10)	77.60	77.40	77.20	78.20	79.70	81.20	83.00

TOWN OF SOUTHAMPTON
20-YEAR LIFE CYCLE ANALYSIS
CASE 1B: COMBINED IN-TOWN MSW/LEAF&YARD/FOOD WASTE COMPOSTING
WITH LOW GRADE COMPOST MARKET FAILURE

IN-TOWN PROCESSING REQUIREMENTS	YEAR 8	YEAR 9	YEAR 10	YEAR 11	YEAR 12	YEAR 13	YEAR 14	YEAR 15
INCOMING WASTE (1)								
Source Separated Recyclables (Tons)	18,544	18,955	19,365	19,776	20,181	20,589	21,005	21,429
Leaf/Yard/Food Waste (Tons)	19,346	19,740	20,141	20,544	20,938	21,341	21,752	22,171
Mixed Solid Waste/Other Recycling (Tons)	37,739	37,850	37,965	38,060	38,120	38,183	38,237	38,283
Total Incoming Waste	75,629	76,545	77,471	78,380	79,239	80,113	80,994	81,883
DEBT SERVICE (2)								
Combined MSW,Leaf,Yard,&Food Waste Composting and Recycling Facility	$1,227,100	$1,227,100	$1,227,100	$1,227,100	$1,227,100	$1,227,100	$1,227,100	$1,227,100
OPERATING COST (3)								
MSW Compost & Recyclables Extraction Operations	$2,008,100	$2,127,200	$2,253,500	$2,386,500	$2,525,200	$2,672,400	$2,828,000	$2,992,400
Source Separated Recycling Operations	$652,300	$700,100	$751,000	$805,300	$862,900	$924,400	$990,200	$1,060,700
Total Operating Cost	$2,660,400	$2,827,300	$3,004,500	$3,191,800	$3,388,100	$3,596,800	$3,818,200	$4,053,100
REVENUES (4)								
High Grade Compost	$0	$0	$0	$0	$0	$0	$0	$0
Recyclables	$231,200	$238,000	$245,000	$252,100	$259,200	$266,400	$273,900	$281,500
Total Revenues	$231,200	$238,000	$245,000	$252,100	$259,200	$266,400	$273,900	$281,500
IN-TOWN SYSTEM COST (5)	$3,656,300	$3,816,400	$3,986,600	$4,166,800	$4,356,000	$4,557,500	$4,771,400	$4,998,700
IN-TOWN SYSTEM UNIT COST ($/TON) (6)	48.30	49.90	51.50	53.20	55.00	56.90	58.90	61.00
LANDFILL REQUIREMENTS								
MATERIALS LANDFILLED (7)								
Rejects and Residuals (Tons)	13,590	13,630	13,670	13,700	13,720	13,750	13,770	13,780
Downtime Waste (Tons)	3,020	3,030	3,040	3,040	3,050	3,050	3,060	3,060
Unmarketed Compost (Tons)	16,610	16,650	16,700	16,750	16,770	16,800	16,820	16,840
Total Material Landfilled	33,220	33,310	33,410	33,490	33,540	33,600	33,650	33,680
LANDFILL DISPOSAL COSTS (8)	$2,764,200	$2,841,000	$2,920,700	$3,000,900	$3,080,500	$3,163,200	$3,247,100	$3,331,200
TOTAL COST OF ENTIRE SYSTEM (9)	$6,420,500	$6,657,400	$6,907,300	$7,167,700	$7,436,500	$7,720,700	$8,018,500	$8,329,900
TOTAL UNIT COST OF ENTIRE SYSTEM ($/TON) (10)	84.90	87.00	89.20	91.40	93.80	96.40	99.00	101.70

TOWN OF SOUTHAMPTON
20-YEAR LIFE CYCLE ANALYSIS
CASE 1C: COMBINED IN-TOWN MSW/LEAF&YARD/FOOD WASTE COMPOSTING REDUCED COST WITH LOW GRADE COMPOST MARKET FAILURE

IN-TOWN PROCESSING REQUIREMENTS	YEAR 1 (11)	YEAR 2	YEAR 3	YEAR 4	YEAR 5	YEAR 6	YEAR 7
INCOMING WASTE (1)							
Source Separated Recyclables (Tons)	15,384	15,990	16,613	17,061	17,409	17,750	18,143
Leaf/Yard/Food Waste (Tons)	11,955	13,946	15,956	16,949	17,617	18,318	18,824
Mixed Solid Waste/Other Recyclables (Tons)	44,649	41,943	39,194	38,436	38,108	37,763	37,760
Total Incoming Waste	71,988	71,879	71,763	72,446	73,134	73,831	74,727
DEBT SERVICE (2)							
Combined MSW,Leaf,Yard,&Food Waste Composting and Recycling Facility	$1,019,400	$1,019,400	$1,019,400	$1,019,400	$1,019,400	$1,019,400	$1,019,400
OPERATING COST (3)							
MSW Compost & Recyclables Extraction Operations	$1,301,900	$1,349,700	$1,398,500	$1,474,600	$1,557,900	$1,646,200	$1,744,000
Source Separated Recycling Operations	$353,800	$386,200	$421,300	$454,300	$486,700	$521,000	$559,200
Total Operating Cost	$1,655,700	$1,735,900	$1,819,800	$1,928,900	$2,044,600	$2,167,200	$2,303,200
REVENUES (4)							
High Grade Compost	$0	$0	$0	$0	$0	$0	$0
Recyclables	$189,600	$195,400	$201,500	$207,500	$212,900	$218,300	$224,700
Total Revenues	$189,600	$195,400	$201,500	$207,500	$212,900	$218,300	$224,700
IN-TOWN SYSTEM COST (5)	$2,485,500	$2,559,900	$2,637,700	$2,740,800	$2,851,100	$2,968,300	$3,097,900
IN-TOWN SYSTEM UNIT COST ($/TON) (6)	34.50	35.60	36.80	37.80	39.00	40.20	41.50
LANDFILL REQUIREMENTS							
MATERIALS LANDFILLED (7)							
Rejects and Residuals (Tons)	16,070	15,100	14,110	13,840	13,720	13,590	13,590
Downtime Waste (Tons)	3,570	3,360	3,140	3,070	3,050	3,020	3,020
Unmarketed Compost (Tons)	19,650	18,450	17,250	16,910	16,770	16,620	16,610
Total Material Landfilled	39,290	36,910	34,500	33,820	33,540	33,230	33,220
LANDFILL DISPOSAL COSTS (8)	$2,750,300	$2,648,300	$2,537,300	$2,549,400	$2,591,500	$2,631,800	$2,696,800
TOTAL COST OF ENTIRE SYSTEM (9)	$5,235,800	$5,208,200	$5,175,000	$5,290,200	$5,442,600	$5,600,100	$5,794,700
TOTAL UNIT COST OF ENTIRE SYSTEM ($/TON) (10)	72.70	72.50	72.10	73.00	74.40	75.90	77.50

TOWN OF SOUTHAMPTON
20-YEAR LIFE CYCLE ANALYSIS
CASE 1C: COMBINED IN-TOWN MSW/LEAF&YARD/FOOD WASTE COMPOSTING REDUCED COST WITH LOW GRADE COMPOST MARKET FAILURE

IN-TOWN PROCESSING REQUIREMENTS	YEAR 8	YEAR 9	YEAR 10	YEAR 11	YEAR 12	YEAR 13	YEAR 14	YEAR 15
INCOMING WASTE (1)								
Source Separated Recyclables (Tons)	18,544	18,955	19,365	19,776	20,181	20,589	21,005	21,429
Leaf/Yard/Food Waste (Tons)	19,346	19,740	20,141	20,544	20,938	21,341	21,752	22,171
Mixed Solid Waste/Other Recyclables (Tons)	37,739	37,850	37,965	38,060	38,120	38,183	38,237	38,283
Total Incoming Waste	75,629	76,545	77,471	78,380	79,239	80,113	80,994	81,883
DEBT SERVICE (2)								
Combined MSW,Leaf,Yard,&Food Waste Composting and Recycling Facility	$1,019,400	$1,019,400	$1,019,400	$1,019,400	$1,019,400	$1,019,400	$1,019,400	$1,019,400
OPERATING COST (3)								
MSW Compost & Recyclables Extraction Operations	$1,847,500	$1,957,000	$2,073,300	$2,195,600	$2,323,200	$2,458,600	$2,601,700	$2,753,000
Source Separated Recycling Operations	$600,100	$644,100	$691,000	$740,900	$793,900	$850,400	$911,000	$975,800
Total Operating Cost	$2,447,600	$2,601,100	$2,764,300	$2,936,500	$3,117,100	$3,309,000	$3,512,700	$3,728,800
REVENUES (4)								
High Grade Compost	$0	$0	$0	$0	$0	$0	$0	$0
Recyclables	$231,200	$238,000	$245,000	$252,100	$259,200	$266,400	$273,900	$281,500
Total Revenues	$231,200	$238,000	$245,000	$252,100	$259,200	$266,400	$273,900	$281,500
IN-TOWN SYSTEM COST (5)	$3,235,800	$3,382,500	$3,538,700	$3,703,800	$3,877,300	$4,062,000	$4,258,200	$4,466,700
IN-TOWN SYSTEM UNIT COST ($/TON) (6)	42.80	44.20	45.70	47.30	48.90	50.70	52.60	54.50
LANDFILL REQUIREMENTS								
MATERIALS LANDFILLED (7)								
Rejects and Residuals (Tons)	13,590	13,630	13,670	13,700	13,720	13,750	13,770	13,780
Downtime Waste (Tons)	3,020	3,030	3,040	3,040	3,050	3,050	3,060	3,060
Unmarketed Compost (Tons)	16,610	16,650	16,700	16,750	16,770	16,800	16,820	16,840
Total Material Landfilled	33,220	33,310	33,410	33,490	33,540	33,600	33,650	33,680
LANDFILL DISPOSAL COSTS (8)	$2,764,200	$2,841,000	$2,920,700	$3,000,900	$3,080,500	$3,163,200	$3,247,100	$3,331,200
TOTAL COST OF ENTIRE SYSTEM (9)	$6,000,000	$6,223,500	$6,459,400	$6,704,700	$6,957,800	$7,225,200	$7,505,300	$7,797,900
TOTAL UNIT COST OF ENTIRE SYSTEM ($/TON) (10)	79.30	81.30	83.40	85.50	87.80	90.20	92.70	95.20

TOWN OF SOUTHAMPTON
20-YEAR LIFE CYCLE ANALYSIS
CASE 2: RECYCLING,COMPOSTING AND TRANSFER WITH REGIONAL WASTE-TO-ENERGY

RESOURCE RECOVERY SYSTEM REQUIREMENTS	YEAR 1 (12)	YEAR 2	YEAR 3	YEAR 4	YEAR 5	YEAR 6	YEAR 7
INCOMING WASTE (1)							
Source Separated Recyclables (Tons)	15,384	15,990	16,613	17,061	17,409	17,750	18,143
Leaf/Yard/Food Waste (Tons)	11,955	13,946	15,956	16,949	17,617	18,318	18,824
Mixed Solid Waste/Other Recycling (Tons)	44,649	41,943	39,194	38,436	38,108	37,763	37,760
Total Incoming Waste	71,988	71,879	71,763	72,446	73,134	73,831	74,727
DEBT SERVICE (2)							
Transfer/S.Sep. Recycling Facility with Leaf/Yard/Food Waste Composting	$566,400	$566,400	$566,400	$566,400	$566,400	$566,400	$566,400
Total Debt Service	$566,400	$566,400	$566,400	$566,400	$566,400	$566,400	$566,400
OPERATING COST (3)							
Transfer and S.Sep. Recycling Operations	$1,500,800	$1,520,700	$1,538,200	$1,606,100	$1,687,000	$1,771,300	$1,872,900
Leaf/Yard/Food Waste Composting	$143,500	$169,000	$195,300	$209,600	$220,000	$231,000	$239,800
Total Operating Cost	$1,644,300	$1,689,700	$1,733,500	$1,815,700	$1,907,000	$2,002,300	$2,112,700
REVENUES (4)							
High Grade Compost	$0	$0	$0	$0	$0	$0	$0
Recyclables	$189,600	$195,400	$201,500	$207,500	$212,900	$218,300	$224,700
Total Revenues	$189,600	$195,400	$201,500	$207,500	$212,900	$218,300	$224,700
RESOURCE RECOVERY SYSTEM COST (5)	$2,021,100	$2,060,700	$2,098,400	$2,174,600	$2,260,500	$2,350,400	$2,454,400
RESOURCE RECOVERY SYSTEM UNIT COST ($/TON) (6)	28.10	28.70	29.20	30.00	30.90	31.80	32.80
DISPOSAL REQUIREMENTS							
MATERIALS LANDFILLED (7)							
Rejects and Residuals (Tons)	4,460	4,190	3,920	3,840	3,810	3,780	3,780
Downtime Waste (Tons)	4,460	4,190	3,920	3,840	3,810	3,780	3,780
Unmarketed Recyclables (Tons)	0	0	0	0	0	0	0
Total Material Landfilled	8,920	8,380	7,840	7,680	7,620	7,560	7,560
LANDFILL DISPOSAL COSTS (8)	$624,400	$601,300	$576,600	$578,900	$588,800	$598,700	$613,700
MATERIALS DISPOSED BY W-T-E (Tons)	32,160	30,210	28,220	27,680	27,440	27,180	27,180
WASTE-TO-ENERGY DISPOSAL COSTS (9)	$2,733,600	$2,696,295	$2,644,567	$2,723,660	$2,835,047	$2,948,593	$3,096,023
TOTAL COST OF INTEGRATED SYSTEM (10)	$5,379,100	$5,358,295	$5,319,567	$5,477,160	$5,684,347	$5,897,693	$6,164,123
TOTAL UNIT COST OF INTEGRATED SYSTEM ($/TON) (11)	74.70	74.50	74.10	75.60	77.70	79.90	82.50

TOWN OF SOUTHAMPTON
20-YEAR LIFE CYCLE ANALYSIS
CASE 2: RECYCLING,COMPOSTING AND TRANSFER WITH REGIONAL WASTE-TO-ENERGY

RESOURCE RECOVERY SYSTEM REQUIREMENTS	YEAR 8	YEAR 9	YEAR 10	YEAR 11	YEAR 12	YEAR 13	YEAR 14	YEAR 15
INCOMING WASTE (1)								
Source Separated Recyclables (Tons)	18,544	18,955	19,365	19,776	20,181	20,589	21,005	21,429
Leaf/Yard/Food Waste (Tons)	19,346	19,740	20,141	20,544	20,938	21,341	21,752	22,171
Mixed Solid Waste/Other Recycling (Tons)	37,739	37,850	37,965	38,060	38,120	38,183	38,237	38,283
Total Incoming Waste	75,629	76,545	77,471	78,380	79,239	80,113	80,994	81,883
DEBT SERVICE (2)								
Transfer/S.Sep. Recycling Facility with Leaf/Yard/Food Waste Composting	$566,400	$566,400	$566,400	$566,400	$566,400	$566,400	$566,400	$566,400
Total Debt Service	$566,400	$566,400	$566,400	$566,400	$566,400	$566,400	$566,400	$566,400
OPERATING COST (3)								
Transfer and S.Sep. Recycling Operations	$1,979,900	$2,098,200	$2,223,400	$2,355,200	$2,492,900	$2,638,700	$2,792,700	$2,955,600
Leaf/Yard/Food Waste Composting	$248,900	$256,500	$264,300	$272,300	$280,300	$288,600	$297,100	$305,800
Total Operating Cost	$2,228,800	$2,354,700	$2,487,700	$2,627,500	$2,773,200	$2,927,300	$3,089,800	$3,261,400
REVENUES (4)								
High Grade Compost	$0	$0	$0	$0	$0	$0	$0	$0
Recyclables	$231,200	$238,000	$245,000	$252,100	$259,200	$266,400	$273,900	$281,500
Total Revenues	$231,200	$238,000	$245,000	$252,100	$259,200	$266,400	$273,900	$281,500
RESOURCE RECOVERY SYSTEM COST (5)	$2,564,000	$2,683,100	$2,809,100	$2,941,800	$3,080,400	$3,227,300	$3,382,300	$3,546,300
RESOURCE RECOVERY SYSTEM UNIT COST ($/TON) (6	33.90	35.10	36.30	37.50	38.90	40.30	41.80	43.30
DISPOSAL REQUIREMENTS								
MATERIALS LANDFILLED (7)								
Rejects and Residuals (Tons)	3,770	3,790	3,800	3,810	3,810	3,820	3,820	3,830
Downtime Waste (Tons)	3,770	3,790	3,800	3,810	3,810	3,820	3,820	3,830
Unmarketed Recyclables (Tons)	0	0	0	0	0	0	0	0
Total Material Landfilled	7,540	7,580	7,600	7,620	7,620	7,640	7,640	7,660
LANDFILL DISPOSAL COSTS (8)	$627,400	$646,500	$664,400	$682,800	$699,900	$719,200	$737,200	$757,600
MATERIALS DISPOSED BY W-T-E (Tons)	27,180	27,240	27,330	27,400	27,450	27,490	27,540	27,560
WASTE-TO-ENERGY DISPOSAL COSTS (9)	$3,250,824	$3,420,900	$3,603,891	$3,793,696	$3,990,735	$4,196,377	$4,414,116	$4,638,188
TOTAL COST OF INTEGRATED SYSTEM (10)	$6,442,224	$6,[illegible]0,500	$7,077,391	$7,418,296	$7,771,035	$8,142,877	$8,533,616	$8,942,088
TOTAL UNIT COST OF INTEGRATED SYSTEM ($/TON) (1	85.20	88.20	91.40	94.60	98.10	101.60	105.40	109.20

WN OF SOUTHAMPTON

20-YEAR LIFE CYCLE ANALYSIS

CASE 3A: IN-TOWN L&Y WASTE COMPOSTING AND TRANSFER FACILITY WITH REGIONAL MSW COMPOSTING AND MATERIALS RECOVERY

IN-TOWN PROCESSING REQUIREMENTS	YEAR 1 (13)	YEAR 2	YEAR 3	YEAR 4	YEAR 5	YEAR 6	YEAR 7
INCOMING WASTE (1)							
Source Separated Recyclables (Tons)	15,384	15,990	16,613	17,061	17,409	17,750	18,143
Leaf/Yard Waste (Tons)	8,334	8,405	8,475	8,641	8,811	8,984	9,184
Mixed Solid Waste/Other Recycling (Tons)	48,270	47,484	46,675	46,744	46,914	47,097	47,400
Total Incoming Waste	71,988	71,879	71,763	72,446	73,134	73,831	74,727
DEBT SERVICE (2)							
Transfer Station/Leaf&Yard Compost Facility	$472,000	$472,000	$472,000	$472,000	$472,000	$472,000	$472,000
OPERATING COST (3)							
Transfer Station/Composting Operations	$1,799,700	$1,886,800	$1,978,000	$2,096,600	$2,222,400	$2,355,700	$2,503,500
Transportation Costs	$191,000	$199,900	$209,300	$221,600	$234,600	$248,300	$263,500
Total Operating Costs	$1,990,700	$2,086,700	$2,187,300	$2,318,200	$2,457,000	$2,604,000	$2,767,000
REVENUES (4)							
High Grade Compost	$0	$0	$0	$0	$0	$0	$0
Recyclables	$41,500	$43,600	$45,800	$47,500	$48,900	$50,400	$52,000
Total Revenues	$41,500	$43,600	$45,800	$47,500	$48,900	$50,400	$52,000
IN-TOWN SYSTEM COST (5)	$2,421,200	$2,515,100	$2,613,500	$2,742,700	$2,880,100	$3,025,600	$3,187,000
IN-TOWN SYSTEM UNIT COST ($/TON) (6)	33.60	35.00	36.40	37.90	39.40	41.00	42.60
LANDFILL REQUIREMENTS							
MATERIALS LANDFILLED (7)							
Residuals (Tons)	54,800	55,300	55,900	56,400	57,000	57,500	58,100
Downtime Waste (Tons)	1,800	1,800	1,900	1,900	1,900	1,900	1,900
Unmarketed Compost (Tons)	0	0	0	0	0	0	0
Total Material Landfilled	56,600	57,100	57,800	58,300	58,900	59,400	60,000
LANDFILL DISPOSAL COSTS (8)	$3,962,000	$4,096,900	$4,250,800	$4,394,800	$4,551,000	$4,704,400	$4,870,700
LANDFILL DISPOSAL REVENUES (9)	$3,011,300	$3,193,400	$3,386,600	$3,591,500	$3,808,800	$4,039,200	$4,283,600
OUT-OF-TOWN RECYCLING AND MSW COMPOSTING							
Source Separated Recyclables (10)	$181,500	$198,100	$216,100	$233,100	$249,700	$267,300	$286,900
Mixed Solid Waste (10)	$3,378,900	$3,490,100	$3,602,100	$3,787,800	$3,991,700	$4,207,600	$4,446,400
Total Disposal Fee	$3,560,400	$3,688,200	$3,818,200	$4,020,900	$4,241,400	$4,474,900	$4,733,300
TOTAL COST OF ENTIRE SYSTEM (11)	$6,932,300	$7,306,800	$7,295,900	$7,566,900	$7,863,700	$8,165,700	$8,501,400
TOTAL UNIT COST OF ENTIRE SYSTEM ($/TON) (12)	96.30	98.90	101.70	104.40	107.50	110.60	113.80

TOWN OF SOUTHAMPTON
20-YEAR LIFE CYCLE ANALYSIS
CASE 3A: IN-TOWN L&Y WASTE COMPOSTING AND TRANSFER FACILITY WITH REGIONAL MSW COMPOSTING AND MATERIALS RECOVERY

IN-TOWN PROCESSING REQUIREMENTS	YEAR 8	YEAR 9	YEAR 10	YEAR 11	YEAR 12	YEAR 13	YEAR 14	YEAR 15
INCOMING WASTE (1)								
Source Separated Recyclables (Tons)	18,544	18,955	19,365	19,776	20,181	20,589	21,005	21,429
Leaf/Yard Waste (Tons)	9,387	9,596	9,809	10,024	10,235	10,451	10,672	10,897
Mixed Solid Waste/Other Recycling (Tons)	47,698	47,994	48,297	48,580	48,823	49,073	49,317	49,557
Total Incoming Waste	75,629	76,545	77,471	78,380	79,239	80,113	80,994	81,883
DEBT SERVICE (2)								
Transfer Station/Leaf&Yard Compost Facility	$472,000	$472,000	$472,000	$472,000	$472,000	$472,000	$472,000	$472,000
OPERATING COST (3)								
Transfer Station/Composting Operations	$2,660,400	$2,827,300	$3,004,600	$3,191,800	$3,388,100	$3,596,800	$3,818,200	$4,053,100
Transportation Costs	$279,600	$296,700	$314,900	$334,000	$354,100	$375,300	$397,800	$421,600
Total Operating Costs	$2,940,000	$3,124,000	$3,319,500	$3,525,800	$3,742,200	$3,972,100	$4,216,000	$4,474,700
REVENUES (4)								
High Grade Compost	$0	$0	$0	$0	$0	$0	$0	$0
Recyclables	$53,700	$55,400	$57,200	$59,000	$60,800	$62,600	$64,500	$66,500
Total Revenues	$53,700	$55,400	$57,200	$59,000	$60,800	$62,600	$64,500	$66,500
IN-TOWN SYSTEM COST (5)	$3,358,300	$3,540,600	$3,734,300	$3,938,800	$4,153,400	$4,381,500	$4,623,500	$4,880,200
IN-TOWN SYSTEM UNIT COST ($/TON) (6)	44.40	46.30	48.20	50.30	52.40	54.70	57.10	59.60
LANDFILL REQUIREMENTS								
MATERIALS LANDFILLED (7)								
Residuals (Tons)	58,700	59,300	59,900	60,500	61,100	61,700	62,300	62,900
Downtime Waste (Tons)	2,000	2,000	2,000	2,000	2,000	2,100	2,100	2,100
Unmarketed Compost (Tons)	0	0	0	0	0	0	0	0
Total Material Landfilled	60,700	61,300	61,900	62,500	63,100	63,800	64,400	65,000
LANDFILL DISPOSAL COSTS (8)	$5,050,700	$5,228,200	$5,411,300	$5,600,400	$5,795,500	$6,006,300	$6,214,300	$6,429,000
LANDFILL DISPOSAL REVENUES (9)	$4,542,800	$4,817,600	$5,109,100	$5,418,200	$5,746,000	$6,093,600	$6,462,300	$6,853,200
OUT-OF-TOWN RECYCLING AND MSW COMPOSTING								
Source Separated Recyclables (10)	$307,900	$330,500	$354,500	$380,100	$407,300	$436,300	$467,400	$500,600
Mixed Solid Waste (10)	$4,698,100	$4,963,600	$5,244,700	$5,539,200	$5,845,300	$6,169,000	$6,509,800	$6,868,400
Total Disposal Fee	$5,006,000	$5,294,100	$5,599,200	$5,919,300	$6,252,600	$6,605,300	$6,977,000	$7,369,000
TOTAL COST OF ENTIRE SYSTEM (11)	$8,872,200	$9,345,300	$9,635,700	$10,040,300	$10,855,500	$10,899,300	$11,352,500	$11,825,000
TOTAL UNIT COST OF ENTIRE SYSTEM ($/TON) (12)	117.30	120.80	124.40	128.10	131.90	136.10	140.20	144.40

TOWN OF SOUTHAMPTON
20-YEAR LIFE CYCLE ANALYSIS
CASE 3B: IN-TOWN MSW PRE-PROCESSING,L&Y WASTE COMPOSTING, AND SOURCE-SEPARATED MATERIALS RECOVERY WITH REGIONAL MSW COMPOSTING

IN-TOWN PROCESSING REQUIREMENTS	YEAR 1 (13)	YEAR 2	YEAR 3	YEAR 4	YEAR 5	YEAR 6	YEAR 7
INCOMING WASTE (1)							
Source Separated Recyclables (Tons)	15,384	15,990	16,613	17,061	17,409	17,750	18,143
Leaf & Yard Waste (Tons)	8,334	8,405	8,475	8,641	8,811	8,984	9,184
Mixed Solid Waste/Other Recycling (Tons)	48,270	47,484	46,675	46,744	46,914	47,097	47,400
Total Incoming Waste	71,988	71,879	71,763	72,446	73,134	73,831	74,727
DEBT SERVICE (2)							
Transfer Station/Leaf&Yard Compost Facility	$472,000	$472,000	$472,000	$472,000	$472,000	$472,000	$472,000
Preprocessing System	$179,300	$179,300	$179,300	$179,300	$179,300	$179,300	$179,300
Total Debt Service	$651,300	$651,300	$651,300	$651,300	$651,300	$651,300	$651,300
OPERATING COST (3)							
Combined Transfer Station/MSW Pre-Processing and L&YW Composting	$1,799,700	$1,886,800	$1,978,000	$2,096,600	$2,222,400	$2,355,700	$2,503,500
Transportation Costs	$158,100	$164,100	$170,000	$179,200	$189,600	$200,200	$212,300
Total Operating Cost	$1,957,800	$2,050,900	$2,148,000	$2,275,800	$2,412,000	$2,555,900	$2,715,800
REVENUES (4)							
High Grade Compost	$0	$0	$0	$0	$0	$0	$0
Recyclables	$192,500	$199,900	$207,600	$214,300	$220,200	$226,200	$232,800
Total Revenues	$192,500	$199,900	$207,600	$214,300	$220,200	$226,200	$232,800
IN-TOWN SYSTEM COST (5)	$2,416,600	$2,502,300	$2,591,700	$2,712,800	$2,843,100	$2,981,000	$3,134,300
IN-TOWN SYSTEM UNIT COST ($/TON) (6)	33.60	34.80	36.10	37.40	38.90	40.40	41.90
LANDFILL REQUIREMENTS							
MATERIALS LANDFILLED (7)							
Residuals (Tons)	54,750	55,300	55,850	56,410	56,970	57,540	58,120
Downtime Waste (Tons)	1,830	1,840	1,860	1,880	1,900	1,920	1,940
Unmarketed Compost (Tons)	0	0	0	0	0	0	0
Total Material Landfilled	56,580	57,140	57,710	58,290	58,870	59,460	60,060
LANDFILL DISPOSAL COSTS (8)	$3,960,600	$4,099,800	$4,244,200	$4,394,000	$4,548,700	$4,709,100	$4,875,600
LANDFILL DISPOSAL REVENUES (9)	$3,695,600	$3,919,400	$4,156,300	$4,407,900	$4,674,200	$4,957,000	$5,257,300
OUT-OF-TOWN MSW COMPOSTING REQ'TS							
MATERIALS DISPOSED BY MSW COMPOSTING (Tons)	52700	52100	51400	51600	52000	52300	52800
MSW COMPOSTING DISPOSAL COSTS (10)	$2,977,600	$3,091,100	$3,202,200	$3,375,700	$3,571,900	$3,771,900	$3,998,500
MSW COMPOSTING DISPOSAL COST PER TON	56.50	59.33	62.3	65.42	68.69	72.12	75.73
TOTAL COST OF ENTIRE SYSTEM (11)	$5,659,300	$5,773,800	$5,881,800	$6,034,600	$6,289,500	$6,505,000	$6,751,100
TOTAL UNIT COST OF ENTIRE SYSTEM ($/TON) (12)	78.60	80.30	82.00	83.90	86.00	88.10	90.30

SENT BY:MPI WHITE PLAINS ; 8- 7-92 ; 13:34 ; 212 213 4120;# 4/ 4

TOWN OF SOUTHAMPTON
20-YEAR LIFE CYCLE ANALYSES
CASE 3B: IN-TOWN MSW PRE-PROCESSING,L&Y WASTE COMPOSTING, AND SOURCE-SEPARATED MATERIALS RECOVERY WITH REGIONAL MSW COMPOSTING

IN-TOWN PROCESSING REQUIREMENTS	YEAR 8	YEAR 9	YEAR 10	YEAR 11	YEAR 12	YEAR 13	YEAR 14	YEAR 15
INCOMING WASTE (1)								
Source Separated Recyclables (Tons)	18,544	18,955	19,365	19,776	20,181	20,589	21,005	21,429
Leaf & Yard Waste (Tons)	9,387	9,596	9,809	10,024	10,235	10,451	10,672	10,897
Mixed Solid Waste/Other Recycling (Tons)	47,698	47,994	48,297	48,580	48,823	49,073	49,317	49,557
Total Incoming Waste	75,629	76,545	77,471	78,380	79,239	80,113	80,994	81,883
DEBT SERVICE (2)								
Transfer Station/Leaf&Yard Compost Facility	$472,000	$472,000	$472,000	$472,000	$472,000	$472,000	$472,000	$472,000
Preprocessing System	$179,300	$179,300	$179,300	$179,300	$179,300	$179,300	$179,300	$179,300
Total Debt Service	$651,300	$651,300	$651,300	$651,300	$651,300	$651,300	$651,300	$651,300
OPERATING COST (3)								
Combined Transfer Station/MSW Pre-Processing and L&YW Composting	$2,660,400	$2,827,300	$3,004,600	$3,191,800	$3,388,100	$3,596,800	$3,818,200	$4,053,100
Transportation Costs	$225,000	$238,500	$252,200	$267,300	$283,200	$299,500	$316,800	$335,600
Total Operating Cost	$2,885,400	$3,065,800	$3,256,800	$3,459,100	$3,671,300	$3,896,300	$4,135,000	$4,388,700
REVENUES (4)								
High Grade Compost	$0	$0	$0	$0	$0	$0	$0	$0
Recyclables	$239,700	$246,800	$254,000	$261,400	$268,700	$276,200	$284,000	$291,900
Total Revenues	$239,700	$246,800	$254,000	$261,400	$268,700	$276,200	$284,000	$291,900
IN-TOWN SYSTEM COST (5)	$3,297,000	$3,470,300	$3,654,100	$3,849,000	$4,053,900	$4,271,400	$4,502,300	$4,748,100
IN-TOWN SYSTEM UNIT COST ($/TON) (6)	43.60	45.30	47.20	49.10	51.20	53.30	55.60	58.00
LANDFILL REQUIREMENTS								
MATERIALS LANDFILLED (7)								
Residuals (Tons)	58,700	59,290	59,880	60,480	61,080	61,690	62,310	62,930
Downtime Waste (Tons)	1,960	1,980	2,000	2,020	2,040	2,060	2,080	2,100
Unmarketed Compost (Tons)	0	0	0	0	0	0	0	0
Total Material Landfilled	60,660	61,270	61,880	62,500	63,120	63,750	64,390	65,030
LANDFILL DISPOSAL COSTS (8)	$5,047,400	$5,225,600	$5,409,600	$5,600,400	$5,797,300	$6,001,600	$6,213,400	$6,432,000
LANDFILL DISPOSAL REVENUES (9)	$5,575,300	$5,912,900	$6,270,300	$6,649,800	$7,051,600	$7,478,100	$7,930,900	$8,410,300
OUT-OF-TOWN MSW COMPOSTING REQ'TS								
MATERIALS DISPOSED BY MSW COMPOSTING (Tons)	53300	53800	54200	54700	55200	55600	56000	56500
MSW COMPOSTING DISPOSAL COSTS (10)	$4,238,400	$4,492,300	$4,752,300	$5,035,700	$5,335,600	$5,642,800	$5,967,400	$6,321,800
MSW COMPOSTING DISPOSAL COST PER TON	79.52	83.5	87.68	92.06	96.66	101.49	106.56	111.89
TOTAL COST OF ENTIRE SYSTEM (11)	$7,007,500	$7,375,300	$7,545,300	$7,835,300	$8,135,200	$8,437,700	$8,752,200	$9,091,600
TOTAL UNIT COST OF ENTIRE SYSTEM ($/TON) (12)	92.70	95.00	97.40	100.00	102.70	105.30	108.10	111.00

TOWN OF SOUTHAMPTON

20-YEAR LIFE CYCLE ANALYSIS

CASE 4A: IN-TOWN MRF, LEAF & YARD AND ORGANICS WASTE COMPOSTING

SUCCESSFUL LEAF COMPOST MARKETING

IN-TOWN PROCESSING REQUIREMENTS	YEAR 1 (11)	YEAR 2	YEAR 3	YEAR 4	YEAR 5	YEAR 6	YEAR 7	YEAR 8
INCOMING WASTE (1)								
Source Separated Recyclables (Tons)	15,384	15,990	16,613	17,061	17,409	17,750	18,143	18,544
Leaf & Yard Waste (Tons)	8,334	8,405	8,475	8,641	8,811	8,984	9,184	9,387
Organic Waste (Tons)	3,621	5,541	7,481	8,308	8,806	9,334	9,640	9,959
Other Waste Recycling/Private Sector (Tons)	8,939	9,648	9,992	10,212	10,389	10,566	10,775	10,987
Mixed Solid Waste/White Goods/Tires (Tons)	35,710	32,295	29,202	28,224	27,719	27,197	26,985	26,752
Total Incoming Waste	71,988	71,879	71,763	72,446	73,134	73,831	74,727	75,629
DEBT SERVICE (2)								
MRF, Leaf & Yard and Organic Waste Composting Facilities	$727,100	$727,100	$727,100	$727,100	$727,100	$727,100	$727,100	$727,100
OPERATING COST (3)								
Source Separated Recycling Operations	$307,700	$335,800	$366,300	$395,000	$423,200	$453,100	$486,300	$521,900
Leaf & Yard Waste Operations	$166,700	$176,500	$186,900	$200,100	$214,200	$229,300	$246,100	$264,200
Organic Waste Operations	$72,400	$116,400	$165,000	$192,400	$214,100	$238,300	$258,400	$280,300
Other Waste Recycling/Private Sector Operations	$178,800	$202,600	$220,300	$236,400	$252,600	$269,700	$288,800	$309,200
Mixed Solid Waste/White Goods/Tires Operations	$535,700	$508,600	$482,900	$490,100	$505,400	$520,700	$542,400	$564,600
Total Operating Cost	$1,261,300	$1,339,900	$1,421,400	$1,514,000	$1,609,500	$1,711,100	$1,822,000	$1,940,200
REVENUES (4)								
High Grade Compost	$0	$0	$0	$0	$0	$0	$0	$0
Recyclables	$153,800	$161,500	$169,500	$175,800	$181,200	$186,600	$192,600	$198,800
Total Revenues	$153,800	$161,500	$169,500	$175,800	$181,200	$186,600	$192,600	$198,800
IN-TOWN SYSTEM COST (5)	$1,834,600	$1,905,500	$1,979,000	$2,065,300	$2,155,400	$2,251,600	$2,356,500	$2,468,500
IN-TOWN SYSTEM UNIT COST ($/TON) (6)	25.50	26.50	27.60	28.50	29.50	30.50	31.50	32.60
LANDFILL REQUIREMENTS								
MATERIALS LANDFILLED (7)								
Mixed Solid Waste and Other Recycled Mixed Waste (Tons)	35,710	32,295	29,202	28,224	27,719	27,197	26,985	26,752
Unmarketed Compost (Tons)	0	0	0	0	0	0	0	0
Total Material Landfilled	35,710	32,295	29,202	28,224	27,719	27,197	26,985	26,752
LANDFILL DISPOSAL COSTS (8)	$2,499,700	$2,317,200	$2,147,600	$2,127,600	$2,141,800	$2,154,000	$2,190,600	$2,226,000
TOTAL COST OF ENTIRE SYSTEM (9)	$4,334,300	$4,222,700	$4,126,600	$4,192,900	$4,297,200	$4,405,600	$4,547,100	$4,694,500
TOTAL UNIT COST OF ENTIRE SYSTEM ($/TON) (10)	60.20	58.70	57.50	57.90	58.80	59.70	60.80	62.10

TOWN OF SOUTHAMPTON
20-YEAR LIFE CYCLE ANALYSIS
CASE 4A: IN-TOWN MRF, LEAF & YARD AND ORGANICS WASTE COMPOSTING
SUCCESSFUL LEAF COMPOST MARKETING

IN-TOWN PROCESSING REQUIREMENTS	YEAR 9	YEAR 10	YEAR 11	YEAR 12	YEAR 13	YEAR 14	YEAR 15
INCOMING WASTE (1)							
Source Separated Recyclables (Tons)	18,955	19,365	19,776	20,181	20,589	21,005	21,429
Leaf & Yard Waste (Tons)	9,596	9,809	10,024	10,235	10,451	10,672	10,897
Organic Waste (Tons)	10,144	10,332	10,520	10,703	10,890	11,080	11,274
Other Waste Recycling/Private Sector (Tons)	11,203	11,424	11,616	11,802	11,992	12,184	12,379
Mixed Solid Waste/White Goods/Tires (Tons)	26,647	26,541	26,444	26,318	26,191	26,053	25,904
Total Incoming Waste	76,545	77,471	78,380	79,239	80,113	80,994	81,883
DEBT SERVICE (2)							
MRF, Leaf & Yard and Organic Waste Composting Facilities	$727,100	$727,100	$727,100	$727,100	$727,100	$727,100	$727,100
OPERATING COST (3)							
Source Separated Recycling Operations	$560,100	$600,800	$644,300	$690,300	$739,500	$792,200	$848,600
Leaf & Yard Waste Operations	$283,600	$304,300	$326,600	$350,100	$375,400	$402,500	$431,500
Organic Waste Operations	$299,700	$320,600	$342,700	$366,100	$391,100	$417,900	$446,400
Other Waste Recycling/Private Sector Operations	$331,000	$354,400	$378,400	$403,700	$430,700	$459,500	$490,200
Mixed Solid Waste/White Goods/Tires Operations	$590,500	$617,600	$646,100	$675,200	$705,500	$736,900	$769,300
Total Operating Cost	$2,064,900	$2,197,700	$2,338,100	$2,485,400	$2,642,200	$2,809,000	$2,986,000
REVENUES (4)							
High Grade Compost	$0	$0	$0	$0	$0	$0	$0
Recyclables	$205,300	$211,800	$218,500	$225,200	$232,000	$239,100	$246,300
Total Revenues	$205,300	$211,800	$218,500	$225,200	$232,000	$239,100	$246,300
IN-TOWN SYSTEM COST (5)	$2,586,700	$2,713,000	$2,846,700	$2,987,300	$3,137,300	$3,297,000	$3,466,800
IN-TOWN SYSTEM UNIT COST ($/TON) (6)	33.80	35.00	36.30	37.70	39.20	40.70	42.30
LANDFILL REQUIREMENTS							
MATERIALS LANDFILLED (7)							
Mixed Solid Waste and Other Recycled Mixed Waste (Tons)	26,647	26,541	26,444	26,318	26,191	26,053	25,904
Unmarketed Compost (Tons)	0	0	0	0	0	0	0
Total Material Landfilled	26,647	26,541	26,444	26,318	26,191	26,053	25,904
LANDFILL DISPOSAL COSTS (8)	$2,272,700	$2,320,200	$2,369,500	$2,417,200	$2,465,700	$2,514,000	$2,562,100
TOTAL COST OF ENTIRE SYSTEM (9)	$4,859,400	$5,033,200	$5,216,200	$5,404,500	$5,603,000	$5,811,000	$6,028,900
TOTAL UNIT COST OF ENTIRE SYSTEM ($/TON) (10)	63.50	65.00	66.60	68.20	69.90	71.70	73.60

TOWN OF SOUTHAMPTON

20-YEAR LIFE CYCLE ANALYSIS

CASE 4B: IN-TOWN MRF/TRANSFER FACILTIY, ORGANICS WASTE COMPOSTING FACILITY, AND LEAF & YARD COMPOSTING BY PRIVATE SECTOR

IN-TOWN PROCESSING REQUIREMENTS	YEAR 1 (11)	YEAR 2	YEAR 3	YEAR 4	YEAR 5	YEAR 6	YEAR 7	YEAR 8
INCOMING WASTE (1)								
Source Separated Recyclables (Tons)	15,384	15,990	16,613	17,061	17,409	17,750	18,143	18,544
Leaf & Yard Waste (Tons)	8,334	8,405	8,475	8,641	8,811	8,984	9,184	9,387
Organic Waste (Tons)	3,621	5,541	7,481	8,308	8,806	9,334	9,640	9,959
Other Waste Recycling/Private Sector (Tons)	8,939	9,648	9,992	10,212	10,389	10,566	10,775	10,987
Mixed Solid Waste/White Goods/Tires (Tons)	35,710	32,295	29,202	28,224	27,719	27,197	26,985	26,752
Total Incoming Waste	71,988	71,879	71,763	72,446	73,134	73,831	74,727	75,629
DEBT SERVICE (2)								
MRF, Organic Waste Composting Facility and Transfer Facilities	$383,300	$383,300	$383,300	$383,300	$383,300	$383,300	$383,300	$383,300
OPERATING COST (3)								
Export of Source Separated Recyclables	$676,900	$738,700	$805,900	$869,000	$931,100	$996,800	$1,069,800	$1,148,100
Leaf & Yard Waste Composting/Private Sector Operations	$108,600	$114,100	$183,300	$259,800	$303,000	$337,200	$375,300	$406,900
Organic Waste Operations	$72,400	$116,400	$165,000	$192,400	$214,100	$238,300	$258,400	$280,300
Other Waste Recycling/Private Sector Operations	$178,800	$202,600	$220,300	$236,400	$252,600	$269,700	$288,800	$309,200
Mixed Solid Waste/White Goods/Tires Operations	$535,700	$508,600	$482,900	$490,100	$505,400	$520,700	$542,400	$564,600
Total Operating Cost	$1,572,400	$1,680,400	$1,857,400	$2,047,700	$2,206,200	$2,362,700	$2,534,700	$2,709,100
REVENUES (4)								
High Grade Compost	$0	$0	$0	$0	$0	$0	$0	$0
Recyclables	$0	$0	$0	$0	$0	$0	$0	$0
Total Revenues	$0	$0	$0	$0	$0	$0	$0	$0
SYSTEM COST (5)	$1,955,700	$2,063,700	$2,240,700	$2,431,000	$2,589,500	$2,746,000	$2,918,000	$3,092,400
SYSTEM UNIT COST ($/TON) (6)	27.20	28.70	31.20	33.60	35.40	37.20	39.00	40.90
LANDFILL REQUIREMENTS								
MATERIALS LANDFILLED (7)								
Mixed Solid Waste and Other Recycled Mixed Waste (Tons)	35,710	32,295	29,202	28,224	27,719	27,197	26,985	26,752
Unmarketed Compost (Tons)	0	0	0	0	0	0	0	0
Total Material Landfilled	35,710	32,295	29,202	28,224	27,719	27,197	26,985	26,752
LANDFILL DISPOSAL COSTS (8)	$2,499,700	$2,317,200	$2,147,600	$2,127,600	$2,141,800	$2,154,000	$2,190,600	$2,226,000
TOTAL COST OF ENTIRE SYSTEM (9)	$4,455,400	$4,380,900	$4,388,300	$4,558,600	$4,731,300	$4,900,000	$5,108,600	$5,318,400
TOTAL UNIT COST OF ENTIRE SYSTEM ($/TON) (10)	61.90	60.90	61.10	62.90	64.70	66.40	68.40	70.30

TOWN OF SOUTHAMPTON
20-YEAR LIFE CYCLE ANALYSIS
CASE 4B: IN-TOWN MRF/TRANSFER FACILTIY, ORGANICS WASTE COMPOSTING FACILITY, AND LEAF & YARD COMPOSTING BY PRIVATE SECTOR

IN-TOWN PROCESSING REQUIREMENTS	YEAR 9	YEAR 10	YEAR 11	YEAR 12	YEAR 13	YEAR 14	YEAR 15
INCOMING WASTE (1)							
Source Seperated Recyclables (Tons)	18,955	19,365	19,776	20,181	20,589	21,005	21,429
Leaf & Yard Waste (Tons)	9,596	9,809	10,024	10,235	10,451	10,672	10,897
Organic Waste (Tons)	10,144	10,332	10,520	10,703	10,890	11,080	11,274
Other Waste Recycling/Private Sector (Tons)	11,203	11,434	11,616	11,802	11,992	12,184	12,379
Mixed Solid Waste/White Goods/Tires (Tons)	26,647	26,541	26,444	26,318	26,191	26,053	25,904
Total Incoming Waste	76,545	77,471	78,380	79,239	80,113	80,994	81,883
DEBT SERVICE (2)							
MRF, Organic Waste Composting Facility and Transfer Facilities	$383,300	$383,300	$383,300	$383,300	$383,300	$383,300	$383,300
OPERATING COST (3)							
Export of Source Seperated Recyclables	$1,232,200	$1,321,800	$1,417,400	$1,518,700	$1,626,900	$1,742,800	$1,866,800
Leaf & Yard Waste Composting/Private Sector Operations	$441,400	$472,100	$504,900	$539,800	$576,600	$616,000	$658,100
Organic Waste Operations	$299,700	$320,600	$342,700	$366,100	$391,100	$417,900	$446,400
Other Waste Recycling/Private Sector Operations	$331,000	$354,400	$378,400	$403,700	$430,700	$459,500	$490,200
Mixed Solid Waste/White Goods/Tires Operations	$590,500	$617,600	$646,100	$675,200	$705,500	$736,900	$769,300
Total Operating Cost	$2,894,800	$3,086,500	$3,289,500	$3,503,500	$3,730,800	$3,973,100	$4,230,800
REVENUES (4)							
High Grade Compost	$0	$0	$0	$0	$0	$0	$0
Recyclables	$0	$0	$0	$0	$0	$0	$0
Total Revenues	$0	$0	$0	$0	$0	$0	$0
SYSTEM COST (5)	$3,278,100	$3,469,800	$3,672,800	$3,886,800	$4,114,100	$4,356,400	$4,614,100
SYSTEM UNIT COST ($/TON) (6)	42.80	44.80	46.90	49.10	51.40	53.80	56.30
LANDFILL REQUIREMENTS							
MATERIALS LANDFILLED (7)							
Mixed Solid Waste and Other Recyclod Mixed Waste (Tons)	26,647	26,541	26,444	26,318	26,191	26,053	25,904
Unmarketed Compost (Tons)	0	0	0	0	0	0	0
Total Material Landfilled	26,647	26,541	26,444	26,318	26,191	26,053	25,904
LANDFILL DISPOSAL COSTS (8)	$2,272,700	$2,320,200	$2,369,500	$2,417,200	$2,465,700	$2,514,000	$2,562,100
TOTAL COST OF ENTIRE SYSTEM (9)	$5,550,800	$5,790,000	$6,042,300	$6,304,000	$6,579,800	$6,870,400	$7,176,200
TOTAL UNIT COST OF ENTIRE SYSTEM ($/TON) (10)	72.50	74.70	77.10	79.60	82.10	84.80	87.60

TOWN OF SOUTHAMPTON
20-YEAR LIFE CYCLE ANALYSIS
CASE 4C: IN-TOWN MRF/TRANSFER FACILTIY, ORGANICS WASTE COMPOSTING, NO LEAF & YARD WASTE COLLECTION

IN-TOWN PROCESSING REQUIREMENTS	YEAR 1 (11)	YEAR 2	YEAR 3	YEAR 4	YEAR 5	YEAR 6	YEAR 7	YEAR 8
INCOMING WASTE (1)								
Source Separated Recyclables (Tons)	15,384	15,990	16,613	17,061	17,409	17,750	18,143	18,544
Leaf & Yard Waste (Tons)	0	0	0	0	0	0	0	0
Organic Waste (Tons)	3,621	5,541	7,481	8,308	8,806	9,334	9,640	9,959
Other Waste Recycling/Private Sector (Tons)	8,939	9,648	9,992	10,212	10,389	10,566	10,775	10,987
Mixed Solid Waste/White Goods/Tires (Tons)	35,710	32,295	29,202	28,224	27,719	27,197	26,985	26,752
Total Incoming Waste	63,654	63,474	63,288	63,805	64,323	64,847	65,543	66,242
DEBT SERVICE (2)								
MRF, Organic Waste Composting Facility and Transfer Facilities	$383,300	$383,300	$383,300	$383,300	$383,300	$383,300	$383,300	$383,300
OPERATING COST (3)								
Export of Source Separated Recyclables	$676,900	$738,700	$805,900	$869,000	$931,100	$996,800	$1,069,800	$1,148,100
Organic Waste Operations	$72,400	$116,400	$165,000	$192,400	$214,100	$238,300	$258,400	$280,300
Other Waste Recycling/Private Sector Operations	$178,800	$202,600	$220,300	$236,400	$252,600	$269,700	$288,800	$309,200
Mixed Solid Waste/White Goods/Tires Operations	$535,700	$508,600	$482,900	$490,100	$505,400	$520,700	$542,400	$564,600
Total Operating Cost	$1,463,800	$1,566,300	$1,674,100	$1,787,900	$1,903,200	$2,025,500	$2,159,400	$2,302,200
REVENUES (4)								
High Grade Compost	$0	$0	$0	$0	$0	$0	$0	$0
Recyclables	$0	$0	$0	$0	$0	$0	$0	$0
Total Revenues	$0	$0	$0	$0	$0	$0	$0	$0
SYSTEM COST (5)	$1,847,100	$1,949,600	$2,057,400	$2,171,200	$2,286,500	$2,408,800	$2,542,700	$2,685,500
SYSTEM UNIT COST ($/TON) (6)	29.00	30.70	32.50	34.00	35.50	37.10	38.80	40.50
LANDFILL REQUIREMENTS								
MATERIALS LANDFILLED (7)								
Mixed Solid Waste and Other Recycled Mixed Waste (Tons)	35,710	32,295	29,202	28,224	27,719	27,197	26,985	26,752
Unmarketed Compost (Tons)	0	0	0	0	0	0	0	0
Total Material Landfilled	35,710	32,295	29,202	28,224	27,719	27,197	26,985	26,752
LANDFILL DISPOSAL COSTS (8)	$2,499,700	$2,317,200	$2,147,600	$2,127,600	$2,141,800	$2,154,000	$2,190,600	$2,226,000
TOTAL COST OF ENTIRE SYSTEM (9)	$4,346,800	$4,266,800	$4,205,000	$4,298,800	$4,428,300	$4,562,800	$4,733,300	$4,911,500
TOTAL UNIT COST OF ENTIRE SYSTEM ($/TON) (10)	68.30	67.20	66.40	67.40	68.80	70.40	72.20	74.10

TOWN OF SOUTHAMPTON

20-YEAR LIFE CYCLE ANALYSIS

CASE 4C: IN-TOWN MRF/TRANSFER FACILTIY, ORGANICS WASTE COMPOSTING, NO LEAF & YARD WASTE COLLECTION

IN-TOWN PROCESSING REQUIREMENTS	YEAR 9	YEAR 10	YEAR 11	YEAR 12	YEAR 13	YEAR 14	YEAR 15
INCOMING WASTE (1)							
Source Separated Recyclables (Tons)	18,955	19,365	19,776	20,181	20,589	21,005	21,429
Leaf & Yard Waste (Tons)	0	0	0	0	0	0	0
Organic Waste (Tons)	10,144	10,332	10,520	10,703	10,890	11,080	11,274
Other Waste Recycling/Private Sector (Tons)	11,203	11,424	11,616	11,802	11,992	12,184	12,379
Mixed Solid Waste/White Goods/Tires (Tons)	26,647	26,541	26,444	26,318	26,191	26,053	25,904
Total Incoming Waste	66,949	67,662	68,356	69,004	69,662	70,322	70,986
DEBT SERVICE (2)							
MRF, Organic Waste Composting Facility and Transfer Facilities	$383,300	$383,300	$383,300	$383,300	$383,300	$383,300	$383,300
OPERATING COST (3)							
Export of Source Separated Recyclables	$1,232,200	$1,321,800	$1,417,400	$1,518,700	$1,626,900	$1,742,800	$1,866,800
Organic Waste Operations	$299,700	$320,600	$342,700	$366,100	$391,100	$417,900	$446,400
Other Waste Recycling/Private Sector Operations	$331,000	$354,400	$378,400	$403,700	$430,700	$459,500	$490,200
Mixed Solid Waste/White Goods/Tires Operations	$590,500	$617,600	$646,100	$675,200	$705,500	$736,900	$769,300
Total Operating Cost	$2,453,400	$2,614,400	$2,784,600	$2,963,700	$3,154,200	$3,357,100	$3,572,700
REVENUES (4)							
High Grade Compost	$0	$0	$0	$0	$0	$0	$0
Recyclables	$0	$0	$0	$0	$0	$0	$0
Total Revenues	$0	$0	$0	$0	$0	$0	$0
SYSTEM COST (5)	$2,836,700	$2,997,700	$3,167,900	$3,347,000	$3,537,500	$3,740,400	$3,956,000
SYSTEM UNIT COST ($/TON) (6)	42.40	44.30	46.30	48.50	50.80	53.20	55.70
LANDFILL REQUIREMENTS							
MATERIALS LANDFILLED (7)							
Mixed Solid Waste and Other Recycled Mixed Waste (Tons)	26,647	26,541	26,444	26,318	26,191	26,053	25,904
Unmarketed Compost (Tons)	0	0	0	0	0	0	0
Total Material Landfilled	26,647	26,541	26,444	26,318	26,191	26,053	25,904
LANDFILL DISPOSAL COSTS (8)	$2,272,700	$2,320,200	$2,369,500	$2,417,200	$2,465,700	$2,514,000	$2,562,100
TOTAL COST OF ENTIRE SYSTEM (9)	$5,109,400	$5,317,900	$5,537,400	$5,764,200	$6,003,200	$6,254,400	$6,518,100
TOTAL UNIT COST OF ENTIRE SYSTEM ($/TON) (10)	76.30	78.60	81.00	83.50	86.20	88.90	91.80

TOWN OF SOUTHAMPTON
20-YEAR LIFE CYCLE ANALYSIS
CASE 4D: IN-TOWN MRF, AND ORGANICS WASTE COMPOSTING
NO LEAF & YARD WASTE COLLECTION

IN-TOWN PROCESSING REQUIREMENTS	YEAR 1 (11)	YEAR 2	YEAR 3	YEAR 4	YEAR 5	YEAR 6	YEAR 7	YEAR 8
INCOMING WASTE (1)								
Source Seperated Recyclables (Tons)	15,384	15,990	16,613	17,061	17,409	17,750	18,143	18,544
Leaf & Yard Waste (Tons)	0	0	0	0	0	0	0	0
Organic Waste (Tons)	3,621	5,541	7,481	8,308	8,806	9,334	9,640	9,959
Other Waste Recycling/Private Sector (Tons)	8,939	9,648	9,992	10,212	10,389	10,566	10,775	10,987
Mixed Solid Waste/White Goods/Tires (Tons)	35,710	32,295	29,202	28,224	27,719	27,197	26,985	26,752
Total Incoming Waste	63,654	63,474	63,288	63,805	64,323	64,847	65,543	66,242
DEBT SERVICE (2)								
Combined MRF, and Organic Waste Composting and Recycling Facility	$608,200	$608,200	$608,200	$608,200	$608,200	$608,200	$608,200	$608,200
OPERATING COST (3)								
Source Seperated Recycling Operations	$307,700	$335,800	$366,300	$395,000	$423,200	$453,100	$486,300	$521,900
Leaf & Yard Waste Operations	$0	$0	$0	$0	$0	$0	$0	$0
Organic Waste Operations	$72,400	$116,400	$165,000	$192,400	$214,100	$238,300	$258,400	$280,300
Other Waste Recycling/Private Sector Operations	$178,800	$202,600	$220,300	$236,400	$252,600	$269,700	$288,800	$309,200
Mixed Solid Waste/White Goods/Tires Operations	$535,700	$508,600	$482,900	$490,100	$505,400	$520,700	$542,400	$564,600
Total Operating Cost	$1,094,600	$1,163,400	$1,234,500	$1,313,900	$1,395,300	$1,481,800	$1,575,900	$1,676,000
REVENUES (4)								
High Grade Compost	$0	$0	$0	$0	$0	$0	$0	$0
Recyclables	$153,800	$161,500	$169,500	$175,800	$181,200	$186,600	$192,600	$198,800
Total Revenues	$153,800	$161,500	$169,500	$175,800	$181,200	$186,600	$192,600	$198,800
IN-TOWN SYSTEM COST (5)	$1,549,000	$1,610,100	$1,673,200	$1,746,300	$1,822,300	$1,903,400	$1,991,500	$2,085,400
IN-TOWN SYSTEM UNIT COST ($/TON) (6)	24.30	25.40	26.40	27.40	28.30	29.40	30.40	31.50
LANDFILL REQUIREMENTS								
MATERIALS LANDFILLED (7)								
Mixed Solid Waste and Other Recycled Mixed Waste (Tons)	35,710	32,295	29,202	28,224	27,719	27,197	26,985	26,752
Unmarketed Compost (Tons)	0	0	0	0	0	0	0	0
Total Material Landfilled	35,710	32,295	29,202	28,224	27,719	27,197	26,985	26,752
LANDFILL DISPOSAL COSTS (8)	$2,499,700	$2,317,200	$2,147,600	$2,127,600	$2,141,800	$2,154,000	$2,190,600	$2,226,000
TOTAL COST OF ENTIRE SYSTEM (9)	$4,048,700	$3,927,300	$3,820,800	$3,873,900	$3,964,100	$4,057,400	$4,182,100	$4,311,400
TOTAL UNIT COST OF ENTIRE SYSTEM ($/TON) (10)	63.60	61.90	60.40	60.70	61.60	62.60	63.80	65.10