WATERMILL VILLAGE TOWNHOUSES

WATERMILL, NEW YORK

Site Plan Application: Watermill Village Townhouses

prepared for: Town of Southampton Planning Board- April 3, 2014

Dwg. # *Table of Contents* *Scale*

SP-1	Proposed Site Plan	1" = 30'
SE-1	Soil Erosion and Sediment Control Plan	1" = 30'
GD-1	Grading and Drainage Plan-1	1" = 30'
GD-2	Grading and Drainage Detail Sheet-2	varies
PP-1	Planting Plan- 1	1" = 30'
DT-1	Planting Detail Sheet	varies
DT-2	Site Detail Sheet	varies
LT-1	Lighting Plan-1	1" = 30'
	Utility Plan (*By P.W. Grosser Consulting Engineer)	1" = 30'

prepared by :

ARAIYS DESIGN
LANDSCAPE ARCHITECTURE

Landscape Architects
Site Planners
Development Strategists

Agawam Studio
38 Nugent Street Suite B
Southampton, NY 11968
(631) 283-1131
(631) 283-6677 (fax)
info@araiysdesign.com

Copyright by Araiys Design L.A., P.C.. This drawing is the property of Araiys Design L.A., P.C.. And may not be made known, be copied, or be manipulated, or any other use be made of without the written permission of Araiys Design L.A., P.C ..

1 SITE PLAN
1"=30'-0"

SITE PLAN DATA:

S.C.T.M NUMBER:

0900-114-1-46 (6.46 ACRES)

OWNER:

PHILIP YOUNG
P.O. BOX 964
WAINSCOTT, NY 11975

SITE AREA:
281,397.6 SQ.F.T OR 6.46 ACRES

SITE ZONING DISTRICT (TOWN OF SOUTHAMPTON):

EXISTING ZONING: VILLAGE BUSINESS
PROPOSED ZONING: P.D.D.

PROPOSED HOUSING/BUILDINGS:

TOTAL UNITS: 48
RECREATION BUILDING: 2 STORY 3,000 SQ.FT.

TOTAL UNIT A-1: 21
TOTAL UNIT A: 5
TOTAL UNIT B: 15
TOTAL UNIT C: 7

PARKING:
PARKING REQUIREMENTS FOR MULTI-FAMILY:
2.5 SPACES FOR 3 BEDROOMS OR MORE
TOTAL IS 48 UNITS X 2.5 = 120 SPACES REQUIRED

PROPOSED PARKING: (INCLUDES PARKING IN GARAGES, DRIVEWAYS AND STREET)
GARAGES: 74
DRIVEWAYS: 70
STREET: 23
TOTAL PROPOSED PARKING SPACES: 167

AREA CALCULATIONS:

TOTAL SITE:	281,397.6 S.F. 100% OF SITE
GREEN AREA:	132,947 S.F. 47.2% OF SITE
PARKING/ROADS:	67,374 S.F. 23.9 % OF SITE
BUILDING AREA:	73,536 S.F 26.1 % OF SITE
REC BUILDING:	1,545 S.F. .5% OF SITE
WALKWAYS:	3,153 S.F. 1.1 % OF SITE

NOTES:

- S.C.T.M. # 900-114-1-46
- THIS PLAN HAS BEEN PREPARED FROM A SITE PLAN AND ARCHITECTURAL DRAWINGS PREPARED BY AXELROD AND CHERVENY ARCHITECTS, AIA, P.C. ON MAY 30, 2012 WITH THE LATEST REVISION DATE OF SEPTEMBER 5, 2013
- THIS PLAN HAS BEEN PREPARED FOR COORDINATION PURPOSES AND SITE PLAN APPROVAL ONLY. THIS PLAN IS NOT TO BE USED FOR CONSTRUCTION PURPOSES.
- AREA = 6.46 ACRES
- OWNER: PHILIP YOUNG
  P.O. BOX 964
  WAINSCOTT, NY 11975

ARAIYS DESIGN
LANDSCAPE ARCHITECTURE

Landscape Architects
Site Planners
Development Strategists

Aganam Studio
38 Nugent Street
Suite B
Southampton, NY 11968
(631) 283-1131 (office)
(631) 283-6677 (fax)
info@araiysdesign.com

Project
WATERMILL VILLAGE TOWNHOUSES
Town of Southampton New York

Drawing Title
SITE PLAN

Revisions

No.	Date	Description
1	08/08/13	SITE PLAN
2	09/12/13	TREATMENT PLANT
3	10/17/13	ARCH/SITE PLAN
4	10/28/13	ARCH/SITE PLAN
5	10/30/13	ARCH/SITE PLAN
5	03/17/14	PLANTING PLAN

Seal:

TIMOTHY A. RUMPH R.L.A.
N.Y.S. LIC. NO 852

Job No.	041606
Date	05/12/08
Scale	1"=30'-0"
Drn. By	MRM
Chkd. By	TAR
Drawing No.	SP-1

Copyright by Araiys Design L.A., P.C.. This drawing is the property of Araiys Design L.A., P.C.. And may not be made known, be copied, or be manipulated, or any other use be made of without the written permission of Araiys Design L.A., P.C..

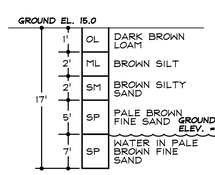

TEST HOLE DATA
NOT TO SCALE
TEST HOLE DUG APRIL 14, 2009

1 SITE PLAN
1"=30'-0"

SITE PLAN DATA:

S.C.T.M NUMBER:

0900-114-1-46 (6.46 ACRES)

OWNER:

PHILIP YOUNG
P.O. BOX 964
WAINSCOTT, NY 11975

SITE AREA:
281,397.6 SQ.F.T OR 6.46 ACRES

SITE ZONING DISTRICT (TOWN OF SOUTHAMPTON):

EXISTING ZONING: VILLAGE BUSINESS
PROPOSED ZONING: P.D.D.

PROPOSED HOUSING/BUILDINGS:

TOTAL UNITS: 48
RECREATION BUILDING: 2 STORY 3,000 SQ.FT.

TOTAL UNIT A-1: 21
TOTAL UNIT A: 5
TOTAL UNIT B: 15
TOTAL UNIT C: 7

PARKING:
PARKING REQUIREMENTS FOR MULTI-FAMILY:
2.5 SPACES FOR 3 BEDROOMS OR MORE
TOTAL IS 48 UNITS X 2.5 = 120 SPACES REQUIRED

PROPOSED PARKING: (INCLUDES PARKING IN GARAGES, DRIVEWAYS AND STREET)
GARAGES: 74
DRIVEWAYS: 70
STREET: 23
TOTAL PROPOSED PARKING SPACES: 167

AREA CALCULATIONS:

TOTAL SITE:	281,397.6 S.F. 100% OF SITE
GREEN AREA:	132,947 S.F. 47.2% OF SITE
PARKING/ROADS:	67,374 S.F. 23.9 % OF SITE
BUILDING AREA:	73,536 S.F 26.1 % OF SITE
REC BUILDING:	1,545 S.F. .5% OF SITE
WALKWAYS:	3,153 S.F. 1.1 % OF SITE

NOTES:
- S.C.T.M. # 900-114-1-46
- THIS PLAN HAS BEEN PREPARED FROM A SITE PLAN AND ARCHITECTURAL DRAWINGS PREPARED BY AXELROD AND CHERVENY ARCHITECTS, AIA, P.C. ON MAY 30, 2012 WITH THE LATEST REVISION DATE OF SEPTEMBER 5, 2013
- THIS PLAN HAS BEEN PREPARED FOR COORDINATION PURPOSES AND SITE PLAN APPROVAL ONLY. THIS PLAN IS NOT TO BE USED FOR CONSTRUCTION PURPOSES.
- AREA = 6.46 ACRES
- OWNER: PHILIP YOUNG
  P.O. BOX 964
  WAINSCOTT, NY 11975

0 15' 30' 60' 120'
SCALE: 1"=30'

ARAIYS DESIGN
LANDSCAPE ARCHITECTURE
Landscape Architects
Site Planners
Development Strategists
Aganam Studio
38 Nugent Street
Suite B
Southampton, NY 11968
(631) 283-1131 (office)
(631) 283-6677 (fax)
info@araiysdesign.com

Project
WATERMILL VILLAGE TOWNHOUSES
Town of Southampton New York

Drawing Title
SITE PLAN

Revisions

No.	Date	Description
1	08/08/13	SITE PLAN
2	09/12/13	TREATMENT PLANT
3	10/17/13	ARCH/SITE PLAN
4	10/28/13	ARCH/SITE PLAN
5	10/30/13	ARCH/SITE PLAN
5	03/17/14	PLANTING PLAN

Seal:
TIMOTHY A. RUMPH R.L.A.
N.Y.S. LIC. NO 852

Job No.	041606
Date	05/12/08
Scale	1"=30'-0"
Drn. By	MRM
Chkd. By	TAR
Drawing No.	SP-1

P:\Watermill Village\Drawings\Sheets\SP-1 Site Plan 2.dwg

Copyright by Araiys Design L.A., P.C. This drawing is the property of Araiys Design L.A., P.C. And may not be made known, be copied, or be manipulated, or any other use be made of without the written permission of Araiys Design L.A., P.C.

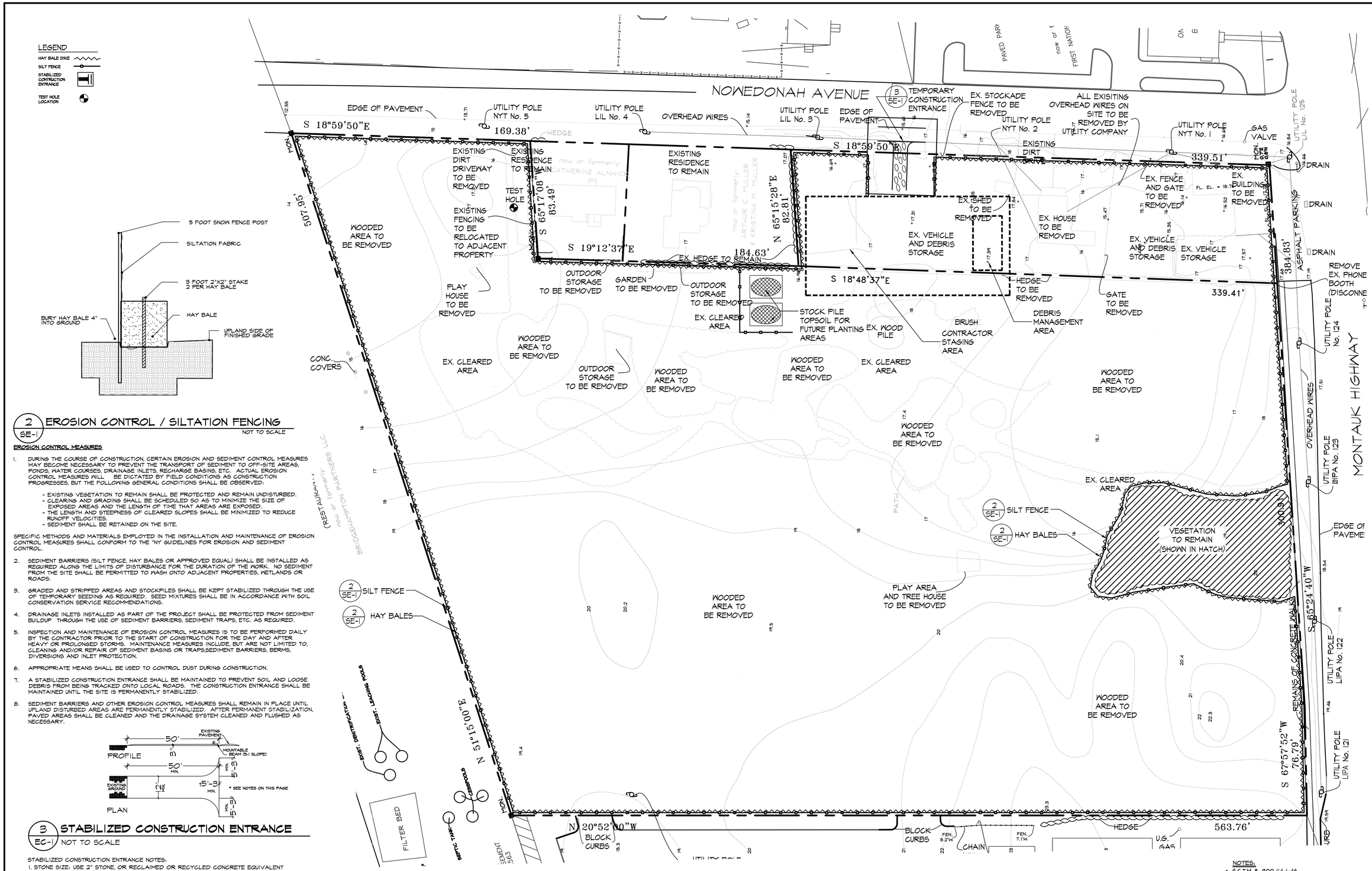

2 SE-1 EROSION CONTROL / SILTATION FENCING

NOT TO SCALE

EROSION CONTROL MEASURES

1. DURING THE COURSE OF CONSTRUCTION, CERTAIN EROSION AND SEDIMENT CONTROL MEASURES MAY BECOME NECESSARY TO PREVENT THE TRANSPORT OF SEDIMENT TO OFF-SITE AREAS, PONDS, WATER COURSES, DRAINAGE INLETS, RECHARGE BASINS, ETC. ACTUAL EROSION CONTROL MEASURES WILL BE DICTATED BY FIELD CONDITIONS AS CONSTRUCTION PROGRESSES, BUT THE FOLLOWING GENERAL CONDITIONS SHALL BE OBSERVED:
   - EXISTING VEGETATION TO REMAIN SHALL BE PROTECTED AND REMAIN UNDISTURBED.
   - CLEARING AND GRADING SHALL BE SCHEDULED SO AS TO MINIMIZE THE SIZE OF EXPOSED AREAS AND THE LENGTH OF TIME THAT AREAS ARE EXPOSED.
   - THE LENGTH AND STEEPNESS OF CLEARED SLOPES SHALL BE MINIMIZED TO REDUCE RUNOFF VELOCITIES.
   - SEDIMENT SHALL BE RETAINED ON THE SITE.

SPECIFIC METHODS AND MATERIALS EMPLOYED IN THE INSTALLATION AND MAINTENANCE OF EROSION CONTROL MEASURES SHALL CONFORM TO THE "NY GUIDELINES FOR EROSION AND SEDIMENT CONTROL.

2. SEDIMENT BARRIERS (SILT FENCE, HAY BALES OR APPROVED EQUAL) SHALL BE INSTALLED AS REQUIRED ALONG THE LIMITS OF DISTURBANCE FOR THE DURATION OF THE WORK. NO SEDIMENT FROM THE SITE SHALL BE PERMITTED TO WASH ONTO ADJACENT PROPERTIES, WETLANDS OR ROADS.
3. GRADED AND STRIPPED AREAS AND STOCKPILES SHALL BE KEPT STABILIZED THROUGH THE USE OF TEMPORARY SEEDING AS REQUIRED. SEED MIXTURES SHALL BE IN ACCORDANCE WITH SOIL CONSERVATION SERVICE RECOMMENDATIONS.
4. DRAINAGE INLETS INSTALLED AS PART OF THE PROJECT SHALL BE PROTECTED FROM SEDIMENT BUILDUP THROUGH THE USE OF SEDIMENT BARRIERS, SEDIMENT TRAPS, ETC. AS REQUIRED.
5. INSPECTION AND MAINTENANCE OF EROSION CONTROL MEASURES IS TO BE PERFORMED DAILY BY THE CONTRACTOR PRIOR TO THE START OF CONSTRUCTION FOR THE DAY AND AFTER HEAVY OR PROLONGED STORMS. MAINTENANCE MEASURES INCLUDE, BUT ARE NOT LIMITED TO, CLEANING AND/OR REPAIR OF SEDIMENT BASINS OR TRAPS,SEDIMENT BARRIERS, BERMS, DIVERSIONS AND INLET PROTECTION.
6. APPROPRIATE MEANS SHALL BE USED TO CONTROL DUST DURING CONSTRUCTION.
7. A STABILIZED CONSTRUCTION ENTRANCE SHALL BE MAINTAINED TO PREVENT SOIL AND LOOSE DEBRIS FROM BEING TRACKED ONTO LOCAL ROADS. THE CONSTRUCTION ENTRANCE SHALL BE MAINTAINED UNTIL THE SITE IS PERMANENTLY STABILIZED.
8. SEDIMENT BARRIERS AND OTHER EROSION CONTROL MEASURES SHALL REMAIN IN PLACE UNTIL UPLAND DISTURBED AREAS ARE PERMANENTLY STABILIZED. AFTER PERMANENT STABILIZATION, PAVED AREAS SHALL BE CLEANED AND THE DRAINAGE SYSTEM CLEANED AND FLUSHED AS NECESSARY.

3 EC-1 STABILIZED CONSTRUCTION ENTRANCE

NOT TO SCALE

STABILIZED CONSTRUCTION ENTRANCE NOTES:
1. STONE SIZE: USE 2" STONE, OR RECLAIMED OR RECYCLED CONCRETE EQUIVALENT
2. LENGTH: NOT LESS THAN 50 FEET
3. THICKNESS: NOT LESS THAN (6) INCHES
4. WIDTH: TWELVE (12) MINIMUM, BUT NOT LESS THAN THE FULL WIDTH AT POINTS WHERE INGRESS OR EGRESS OCCURS. TWENTY FOUR (24) FOOT IF SINGLE ENTRANCE TO SITE.
5. FILTER CLOTH: WILL BE PLACED OVER THE ENTIRE AREA PRIOR TO PLACING THE STONE.
6. SURFACE WATER: ALL SURFACE WATER FLOWING OR DIVERTED TOWARD CONSTRUCTION ENTRANCES SHALL BE PIPED ACROSS THE ENTRANCE. IF PIPING IS IMPRACTICAL, A MOUNTABLE BERM WITH 5:1 SLOPES WILL BE PERMITTED.
7. MAINTENANCE: THE ENTRANCE SHALL BE MAINTAINED IN A CONDITION WHICH WILL PREVENT TRACKING OR FLOWING OF SEDIMENT ONTO PUBLIC RIGHTS-OF-WAY. ALL SEDIMENT SPILLED, DROPPED,WASHED, OR TRACED ONTO PUBLIC RIGHT-OF-WAY MUST BE REMOVED IMMEDIATELY.
8. WHEN WASHING IS REQUIRED, IT SHALL BE DONE ON AN AREA STABILIZED WITH STONE AND WHICH DRAINS INTO AN APPROVED SEDIMENT TRAPPING DEVICE.
9. PERIODIC INSPECTION AND NEEDED MAINTENANCE SHALL BE PROVIDED AFTER EACH RAIN.

1 SOIL EROSION CONTROL PLAN

1"=30'-0"

NOTES:
- S.C.T.M. # 900-114-1-46
- THIS PLAN HAS BEEN PREPARED FROM A SITE PLAN AND ARCHITECTURAL DRAWINGS PREPARED BY AXELROD AND CHERVENY ARCHITECTS, AIA, P.C. ON MAY 30, 2012 WITH THE LATEST REVISION DATE OF SEPTEMBER 5, 2013
- THIS PLAN HAS BEEN PREPARED FOR COORDINATION PURPOSES AND SITE PLAN APPROVAL ONLY. THIS PLAN IS NOT TO BE USED FOR CONSTRUCTION PURPOSES.
- AREA = 6.46 ACRES
- OWNER: PHILIP YOUNG
  P.O. BOX 964
  WAINSCOTT, NY 11975

0 15' 30' 60' 120'
SCALE: 1"=30'

ARAIYS DESIGN
LANDSCAPE ARCHITECTURE
Landscape Architects
Site Planners
Development Strategists
Agaram Studio
38 Nugent Street
Suite B
Southampton, NY 11968
(631) 283-1131 (office)
(631) 283-6677 (fax)
info@araiysdesign.com

Project: WATERMILL VILLAGE TOWNHOUSES
Town of Southampton — New York

Drawing Title: SOIL EROSION CONTROL PLAN

Revisions

No.	Date	Description
1	08/08/13	SITE PLAN
2	09/12/13	TREATMENT PLANT
3	10/17/13	ARCH/SITE PLAN
4	10/28/13	ARCH/SITE PLAN
5	10/30/13	ARCH/SITE PLAN
5	03/17/14	PLANTING PLAN

Seal:

TIMOTHY A. RUMPH R.L.A.
N.Y.S. LIC. NO 652

Job No.	041606
Date	05/12/08
Scale	1"=30'-0"
Drn. By	MRM
Chkd. By	TAR
Drawing No.	SE-1

Copyright by Araiys Design L.A., P.C.. This drawing is the property of Araiys Design L.A., P.C.. And may not be made known, be copied, or be manipulated, or any other use be made of without the written permission of Araiys Design L.A., P.C..

P:\Watermill Village\Drawings\Sheets\SE\SC-1 Soil Erosion and Sediment Control Plan.dwg

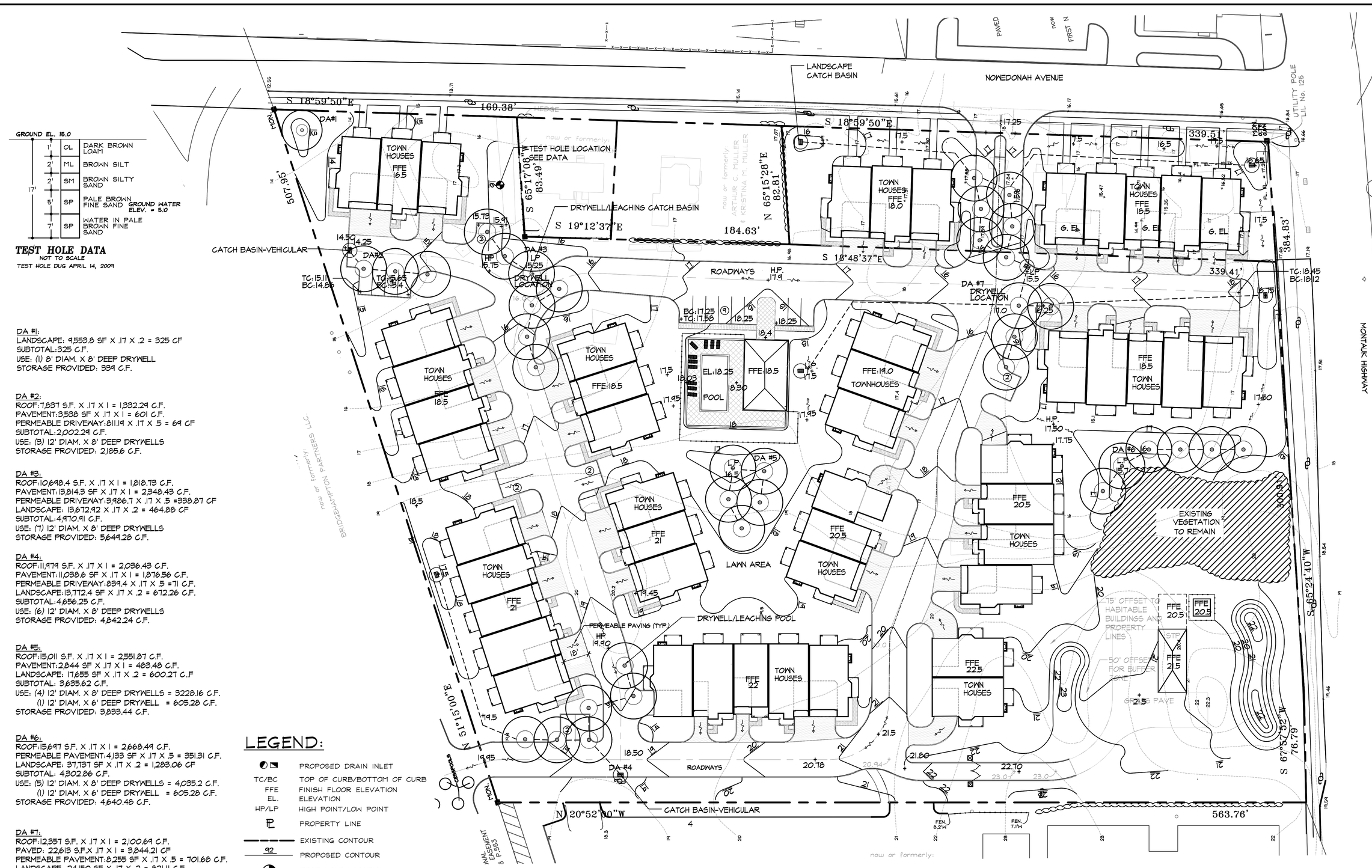

1 GRADING AND DRAINAGE PLAN

1"=30'-0"

NOTES:

- S.C.T.M. # 900-114-1-46
- THIS PLAN HAS BEEN PREPARED FROM A SITE PLAN AND ARCHITECTURAL DRAWINGS PREPARED BY AXELROD AND CHERVENY ARCHITECTS, AIA, P.C. ON MAY 30, 2012 WITH THE LATEST REVISION DATE OF SEPTEMBER 5, 2013
- THIS PLAN HAS BEEN PREPARED FOR COORDINATION PURPOSES AND SITE PLAN APPROVAL ONLY. THIS PLAN IS NOT TO BE USED FOR CONSTRUCTION PURPOSES.
- AREA = 6.46 ACRES
- OWNER: PHILIP YOUNG
  P.O. BOX 964
  WAINSCOTT, NY 11975

0 15' 30' 60' 120'

SCALE: 1"=30'

ARAIYS DESIGN
LANDSCAPE ARCHITECTURE
Landscape Architects
Site Planners
Development Strategists
Aganam Studio
38 Nugent Street
Suite B
Southampton, NY 11968
(631) 283-1131 (office)
(631) 283-6677 (fax)
info@araiysdesign.com

Project: WATERMILL VILLAGE TOWNHOUSES
Town of Southampton New York

Drawing Title: GRADING AND DRAINAGE PLAN

Revisions

No.	Date	Description
1	08/08/13	SITE PLAN
2	09/12/13	TREATMENT PLANT
3	10/17/13	ARCH/SITE PLAN
4	10/28/13	ARCH/SITE PLAN
5	10/30/13	ARCH/SITE PLAN
5	03/17/14	PLANTING PLAN

Seal:

TIMOTHY A. RUMPH R.L.A.
N.Y.S. LIC. NO 652

Job No.	041606
Date	05/12/08
Scale	1"=30'-0"
Drn. By	MRM
Chkd. By	TAR
Drawing No.	GD-1

P:\Watermill Village\Drawings\Sheets\GD-1_2 Grading Plan and details.dwg

Copyright by Araiys Design L.A., P.C.. This drawing is the property of Araiys Design L.A., P.C.. And may not be made known, be copied, or be manipulated, or any other use be made of without the written permission of Araiys Design L.A., P.C..

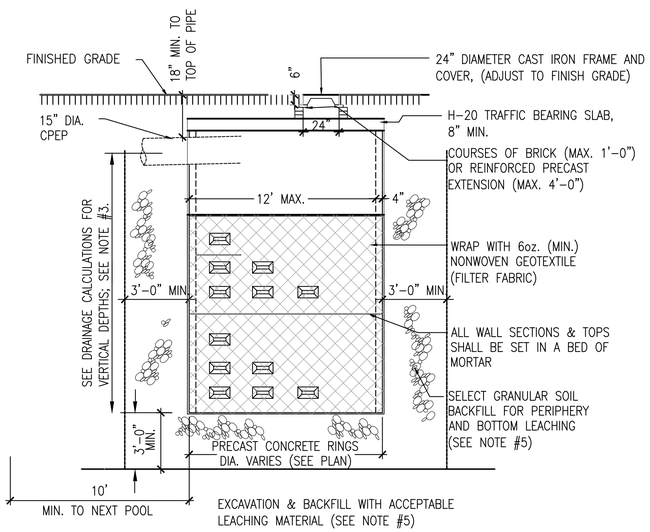

1 DRYWELL / LEACHING POOL, TYP.

SCALE: NOT TO SCALE

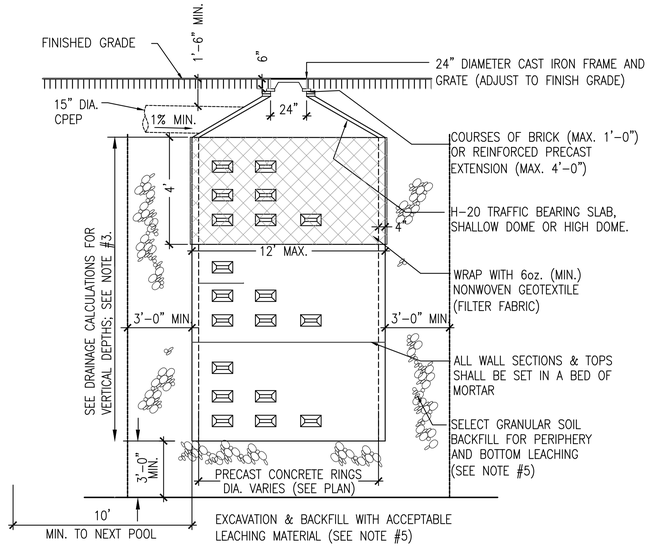

2 DRYWELL/ LEACHING CATCH BASIN, TYP.

SCALE: NOT TO SCALE

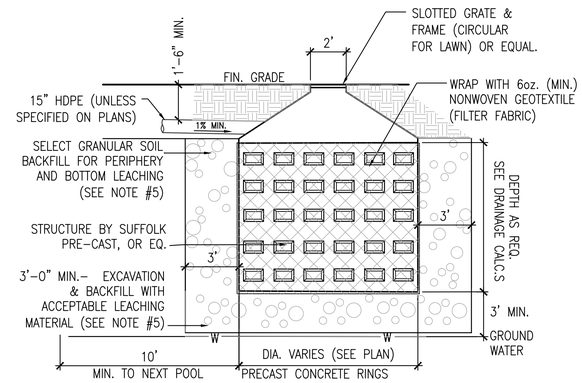

3 LANDSCAPE LEACHING POOL, TYP.

SCALE: NOT TO SCALE

NOTES:

1. LEACHING POOLS SHALL BE PRECAST CONCRETE CEMENT STRUCTURES AS MANUFACTURED BY SUFFOLK PRECAST INC. OR EQUIVALENT. SHOP DRAWINGS SHALL BE SUBMITTED FOR APPROVAL.
2. ALL CONCRETE CEMENT USED IN THE MANUFACTURING OF PRECAST STRUCTURES SHALL DEVELOP A MINIMUM COMPRESSIVE STRENGTH OF 4000 P.S.I. IN 28 DAYS.
3. SHOP DRAWINGS OF PRECAST MANHOLES & CATCH BASINS MUST BE SUBMITTED FOR APPROVAL.
4. REQUESTS FOR DEVIATIONS FROM STANDARD DRAINAGE INSTALLATIONS SHOWN MUST BE MADE IN WRITING & MUST INCLUDE DRAINAGE CALCS.
5. ALL DRAINAGE STRUCTURES SHALL BE PLACED IN ACCEPTABLE LEACHING SOILS. IN THE EVENT POOR LEACHING MATERIAL IS ENCOUNTERED, EXCAVATION IS TO BE CONTINUED TO SUITABLE MATERIAL & BACK FILLED AS DETAILED.
6. ROOF DRAINAGE TO TIE INTO CISTERN STRUCTURES, AS INDICATED ON PLANS, WITH HIGH-DENSITY POLYETHYLENE (HDPE) PIPE- 8" DIA.

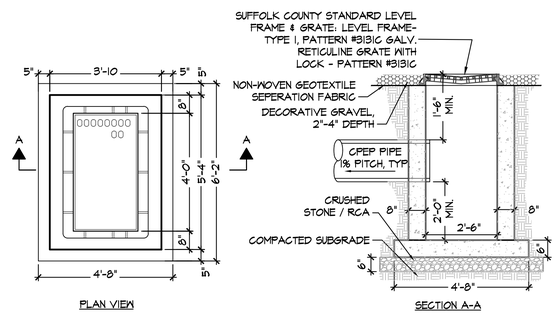

NOTES:

1. ALL CONCRETE TO BE 4,000 P.S.I. AT 28 DAYS.
2. PROVIDE PIPE OPENINGS AS REQUIRED.
3. SEE PLAN FOR PIPE SIZING

4 DROP INLET STRUCTURE, TYP.

SCALE: NOT TO SCALE

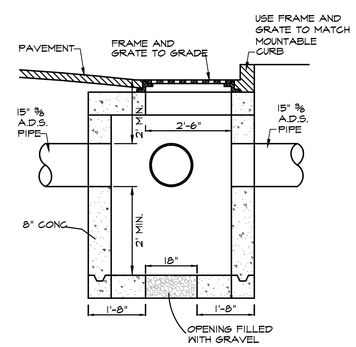

5 CATCH BASIN DETAIL

SCALE: NOT TO SCALE

NOTES:

- S.C.T.M. # 900-114-1-46
- THIS PLAN HAS BEEN PREPARED FROM A SITE PLAN AND ARCHITECTURAL DRAWINGS PREPARED BY AXELROD AND CHERVENY ARCHITECTS, AIA, P.C. ON MAY 30, 2012 WITH THE LATEST REVISION DATE OF SEPTEMBER 5, 2013
- THIS PLAN HAS BEEN PREPARED FOR COORDINATION PURPOSES AND SITE PLAN APPROVAL ONLY. THIS PLAN IS NOT TO BE USED FOR CONSTRUCTION PURPOSES.
- AREA = 6.46 ACRES
- OWNER: PHILIP YOUNG
  P.O. BOX 964
  WAINSCOTT, NY 11975

ARAIYS DESIGN
LANDSCAPE ARCHITECTURE
Landscape Architects
Site Planners
Development Strategists
Aganam Studio
38 Nugent Street
Suite B
Southampton, NY 11968
(631) 283-1131 (office)
(631) 283-6677 (fax)
info@araiysdesign.com

Project
WATERMILL VILLAGE TOWNHOUSES
Town of Southampton New York

Drawing Title
GRADING DETAIL SHEET

Revisions

No.	Date	Description
1	08/08/13	SITE PLAN
2	09/12/13	TREATMENT PLANT
3	10/17/13	ARCH/SITE PLAN
4	10/28/13	ARCH/SITE PLAN
5	10/30/13	ARCH/SITE PLAN
5	08/17/14	PLANTING PLAN

Seal:

TIMOTHY A. RUMPH R.L.A.
N.Y.S. LIC. NO 852

Job No.	041606
Date	05/12/08
Scale	AS NOTED
Drn. By	MRM
Chkd. By	TAR
Drawing No.	GD-2

Copyright by Araiys Design L.A., P.C.. This drawing is the property of Araiys Design L.A., P.C.. And may not be made known, be copied, or be manipulated, or any other use be made of without the written permission of Araiys Design L.A., P.C..

P:\Watermill Village\Drawings\Sheets\GD-1_2 Grading Plan and details.dwg

1 PLANTING PLAN
1"=30'-0"

SCALE: 1"=30'

SITE PLANT LIST

QTY.	SYM.	BOTANICAL NAME	COMMON NAME	SIZE	ROOT	REMARKS	SPACING
		TREES					
23	AF	ACER FREEMANII 'ARMSTRONG'	ARMSTRONG MAPLE	3-1/2-4" CAL.	B&B	FULL, SINGLE LEADER	AS SHOWN
17	BPW	BETULA POPULIFOLIA 'WHITESPIRE'*	WHITESPIRE BIRCH	14-16'	B&B	MULTI-STEM, CLUMP, SPECIMEN	AS SHOWN
39	CB	CARPINUS BETULUS 'FASTIGIATA'	PYRAMIDAL EUROPEAN HORNBEAM	3-1/2-4" CAL.	B&B	FULL, SINGLE LEADER	AS SHOWN
3	CC	CARPINUS CAROLINIANA*	AMERICAN HORNBEAM	2 /2-3" CAL.	B&B	FULL, SINGLE LEADER	AS SHOWN
19	CJ	CRYPTOMERIA JAPONICA	JAPANESE CEDAR	20-22' HT.	B&B	FULL, SINGLE LEADER	AS SHOWN
1	FG	FAGUS GRANDIFOLIA *	AMERICAN BEECH	3- 3 1/2" CAL.	B&B	FULL, SINGLE LEADER	AS SHOWN
49	IN	ILEX 'NELLIE STEVENS'	NELLIE STEVENS HOLLY	12-14' HT.	B&B	FULL, SINGLE LEADER	AS SHOWN
23	IN-1	ILEX 'NELLIE STEVENS'	NELLIE STEVENS HOLLY	7-8' HT.	B&B	FULL, SINGLE LEADER	AS SHOWN
21	IO	ILEX OPACA*	AMERICAN HOLLY	10-12' HT.	B&B	FULL, SINGLE LEADER	AS SHOWN
22	JV	JUNIPERUS VIRGINIANA*	EASTERN RED CEDAR	16'-18' HT.	B&B	FULL, SINGLE LEADER	AS SHOWN
5	LI	LAGERSTROEMIA INDICA 'NATCHEZ'	WHITE CRAPE MYRTLE	12-14' HT.	B&B	FULL, MULTI-STEM	AS SHOWN
5	LIT	LAGERSTROEMIA INDICA 'TUSCARORA'	PINK CRAPE MYRTLE	12-14' HT.	B&B	FULL, MULTI-STEM	AS SHOWN
5	MG	MAGNOLIA GRANDIFLORA 'EDITH BOGUE'	EVERGREEN MAGNOLIA	16-18' HT.	B&B	FULL, SINGLE LEADER	AS SHOWN
10	MS	MAGNOLIA STELLATA	STAR MAGNOLIA	7-8' HT.	B&B	FULL, MULTI-STEM	AS SHOWN
22	PA	PICEA ABIES	NORWAY SPRUCE	18-20' HT.	B&B	FULL, SINGLE LEADER	AS SHOWN
8	PA-1	PICEA ABIES	NORWAY SPRUCE	14-16' HT.	B&B	FULL, SINGLE LEADER	AS SHOWN
11	PAC	PLATANUS X ACERIFOLIA	LONDON PLANETREE	4-5" CAL.	B&B	FULL, SINGLE LEADER	AS SHOWN
7	PS	PRUNUS SERRULATA 'KWANZAN'	KWANZAN CHERRY	3 1/2-4" CAL.	B&B	FULL, SINGLE LEADER	AS SHOWN
7	PY	PRUNUS YEDOENSIS	YOSHINO CHERRY	3 1/2-4" CAL.	B&B	FULL, SINGLE LEADER	AS SHOWN
11	ZS	ZELKOVA SERRATA 'GREEN VASE'	JAPANESE ZELKOVA	3 1/2-4" CAL.	B&B	FULL, SINGLE LEADER	AS SHOWN
		SHRUBS					
36	AA	ARONIA ARBUTIFOLIA *	RED CHOKEBERRY	3 GAL.	CONT.	FULL	
254	BS-1	BUXUS SEMPERVIRENS	COMMON BOXWOOD	18-24" HT.	B&B	FULL	AS SHOWN
82	BS-2	BUXUS SEMPERVIRENS	COMMON BOXWOOD	36" HT.	B&B	FULL	AS SHOWN
19	CA	CLETHRA ALNIFOLIA *	SWEET PEPPER BUSH	5 GAL.	CONT.	FULL	3- 31/2' O.C.
348	HA	HYDRANGEA ARBORESCENS 'ANNABELLE'	ANNABELLE HYDRANGEA	5 GAL.	CONT.	FULL	AS SHOWN
33	HP	HYDRANGEA PANICULATA 'TARDIVA'	TARDIVA HYDRANGEA	5 GAL.	CONT.	FULL	AS SHOWN
2	ICS	ILEX CRENATA 'STEEDS'	STEEDS HOLLY	6-7' HT.	B&B	FULL, PYRAMIDAL FORM	AS SHOWN
1	IM-1	ILEX X MESERVAE 'CHINA BOY'	MALE BLUE HOLLY	4 1/2'-5' HT.	B&B	FULL	AS SHOWN
20	IM-2	ILEX X MESERVAE 'CHINA GIRL'	FEMALE BLUE HOLLY	4 1/2'-5' HT.	B&B	FULL	AS SHOWN
20	IV	ILEX VERTICILLATA*	WINTERBERRY	7 GAL.	CONT.	FULL	7' O.C.
51	LO	LIGUSTRUM OVALIFOLIUM	PRIVET	6'-7'	B&B	FULL, TRAIN AS HEDGE	2' O.C.
380	OH	OSMANTHUS HETEROPHYLLUS	OSMANTHUS	5-6' HT.	B&B	FULL	2' O.C.
450	OH-2	OSMANTHUS HETEROPHYLLUS	OSMANTHUS	3-4' HT.	B&B	FULL	18" O.C.
186	PL	PRUNUS LAUROCERASUS 'SCHIPKAENSIS'	SKIP LAUREL	5-6' HT.	B&B	FULL	AS SHOWN
3	VA	VITEX AGNUS CASTUS	CHASTE TREE	6-7' HT.	B&B	FULL	AS SHOWN
		PERENNIALS					
1,100	CP	CAREX PENSYLVANICA *	PENNSYLVANIA SEDGE	1 GAL.	CONT.	FULL	18"-24" O.C.
238	DF	DESCHAMPSIA FLEXUOSA*	TUFTED HAIRGRASS	1 GAL.	CONT.	FULL	18"-24" O.C.
99	EP	ECHINACEA PURPUREA*	PURPLE CONEFLOWER	1 GAL.	CONT.	FULL	12"-18" O.C.
1,003	LM	LIRIOPE MUSCARI 'VARIEGATA'	VARIEGATED LIRIOPE	1 GAL.	CONT.	FULL	12" O.C.
3	MSM	MISCANTHUS SINENSIS 'MORNING LIGHT'	MAIDEN GRASS	5 GAL.	CONT.	FULL	4 1/2'-5' O.C.
246	NT	NASSELLA TENUISSIMA	MEXICAN FEATHER GRASS	1 GAL.	CONT.	FULL	24" O.C.
40	NSH	NEPETA 'SIX HILLS GIANT'	CAT MINT	1 GAL.	CONT.	FULL	24"-30" O.C.
20	NN	NIPPONANTHEMUM NIPPONICUM	MONTAUK DAISY	3 GAL.	CONT.	FULL	3' O.C.
171	PAH	PENNISETUM ALOPECUROIDES 'HAMELN'	DWARF FOUNTAIN GRASS	1 GAL.	CONT.	FULL	24" O.C.
35	PAT	PEROVSKIA ATRIPLICIFOLIA	PEROVSKIA	1 GAL.	CONT.	FULL	3' O.C.

--IF A DISCREPANCY EXISTS BETWEEN THE PLANT LIST AND THE PLAN, THE PLAN QUANTITIES SHALL GOVERN--
NATIVE PLANT FROM TOWN OF SOUTHAMPTON NATIVE PLANT LIST *

NOTES:

- S.C.T.M. # 900-114-1-46
- THIS PLAN HAS BEEN PREPARED FROM A SITE PLAN AND ARCHITECTURAL DRAWINGS PREPARED BY AXELROD AND CHERVENY ARCHITECTS, AIA, P.C. ON MAY 30, 2012 WITH THE LATEST REVISION DATE OF SEPTEMBER 5, 2013
- THIS PLAN HAS BEEN PREPARED FOR COORDINATION PURPOSES AND SITE PLAN APPROVAL ONLY. THIS PLAN IS NOT TO BE USED FOR CONSTRUCTION PURPOSES.
- AREA = 6.46 ACRES
- OWNER: PHILIP YOUNG
  P.O. BOX 964
  WAINSCOTT, NY 11975

ARAIYS DESIGN
LANDSCAPE ARCHITECTURE
Landscape Architects
Site Planners
Development Strategists
Agawam Studio
38 Nugent Street
Suite B
Southampton, NY 11968
(631) 283-1131 (office)
(631) 283-6677 (fax)
info@araiysdesign.com

Project: WATERMILL VILLAGE TOWNHOUSES
Town of Southampton New York

Drawing Title: PLANTING PLAN

Revisions

No.	Date	Description
1	08/08/13	SITE PLAN
2	09/12/13	TREATMENT PLANT
3	10/17/13	ARCH/SITE PLAN
4	10/28/13	ARCH/SITE PLAN
5	10/30/13	ARCH/SITE PLAN
5	03/17/14	PLANTING PLAN

Seal:

TIMOTHY A. RUMPH R.L.A.
N.Y.S. LIC. NO 852

Job No.	041606
Date	05/12/08
Scale	1"=30'-0"
Drn. By	MRM
Chkd. By	TAR
Drawing No.	PP-1

P:\Watermill Village\Drawings\Sheets\PP-1 Planting Plan 2.dwg

Copyright by Araiys Design L.A., P.C.. This drawing is the property of Araiys Design L.A., P.C.. And may not be made known, be copied, or be manipulated, or any other use be made of without the written permission of Araiys Design L.A., P.C.

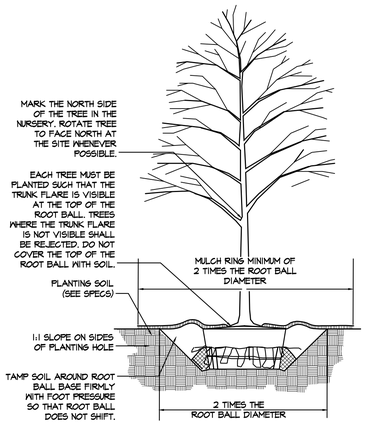

NOTES:
1. DO NOT HEAVILY PRUNE THE TREE AT PLANTING. PRUNE ONLY CROSSOVER LIMBS, CO-DOMINANT LEADERS, AND BROKEN OR DEAD BRANCHES. SOME INTERIOR TWIGS AND LATERAL BRANCHES MAY BE PRUNED, HOWEVER, DO NOT REMOVE THE TERMINAL BUDS OF BRANCHES THAT EXTEND TO THE EDGE OF THE CROWN.
2. STAKE TREES ONLY UPON THE APPROVAL OF THE LANDSCAPE ARCHITECT.
3. SET TOP OF ROOT BALL FLUSH TO GRADE OR 2 INCHES HIGHER IN SLOWLY DRAINING SOILS.
4. USE 3 INCHES MULCH. DO NOT PLACE MULCH IN CONTACT WITH TREE TRUNK. MAINTAIN THE MULCH FREED-FREE FOR DURATION OF CONTRACT PERIOD.
5. CREATE 6 INCH HIGH EARTH SAUCER BEYOND EDGE OF ROOT BALL.
6. BACK FILL WITH EXISTING SOIL. ADD 50% MAX. BY VOLUME COMPOSTED ORGANIC MATERIAL TO THE EXISTING SOIL. FIRM MIXTURE AT 12 INCH INTERVALS- THOROUGHLY SETTLE WITH WATER.
7. REMOVE ALL TWINE, ROPE, WIRE, AND BURLAP FROM TOP HALF OF ROOT BALL.
8. IF PLANT IS SHIPPED WITH A WIRE BASKET AROUND THE ROOT BALL, CUT THE WIRE BASKET IN FOUR PLACES AND REMOVE COMPLETELY.
9. PLACE ROOT BALL ON UN-EXCAVATED OR TAMPED SOIL TO PREVENT SETTLEMENT.

1 DECIDUOUS TREE PLANTING
SCALE: NOT TO SCALE

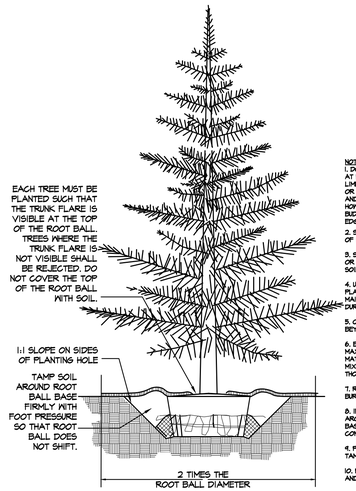

NOTES:
1. DO NOT HEAVILY PRUNE THE TREE AT PLANTING. PRUNE ONLY CROSSOVER LIMBS, CO-DOMINANT LEADERS, AND BROKEN OR DEAD BRANCHES. SOME INTERIOR TWIGS AND LATERAL BRANCHES MAY BE PRUNED, HOWEVER, DO NOT REMOVE THE TERMINAL BUDS OF BRANCHES THAT EXTEND TO THE EDGE OF THE CROWN.
2. STAKE TREES ONLY UPON THE APPROVAL OF THE LANDSCAPE ARCHITECT.
3. SET TOP OF ROOT BALL FLUSH TO GRADE OR 1-2 INCHES HIGHER IN SLOWLY DRAINING SOILS.
4. USE 3 INCHES MULCH. DO NOT PLACE MULCH IN CONTACT WITH TREE TRUNK. MAINTAIN THE MULCH FREED-FREE FOR DURATION OF CONTRACT PERIOD.
5. CREATE 6 INCH HIGH EARTH SAUCER BEYOND EDGE OF ROOT BALL.
6. BACK FILL WITH EXISTING SOIL. ADD 50% MAX. BY VOLUME COMPOSTED ORGANIC MATERIAL TO THE EXISTING SOIL. FIRM MIXTURE AT 12 INCH INTERVALS- THOROUGHLY SETTLE WITH WATER.
7. REMOVE ALL TWINE, ROPE, WIRE, AND BURLAP FROM TOP HALF OF ROOT BALL.
8. IF PLANT IS SHIPPED WITH A WIRE BASKET AROUND THE ROOT BALL, CUT THE WIRE BASKET IN FOUR PLACES AND REMOVE COMPLETELY.
9. PLACE ROOT BALL ON UN-EXCAVATED OR TAMPED SOIL TO PREVENT SETTLEMENT.
10. PRUNE ONLY CO-DOMINANT LEADERS, AND BROKEN OR DEAD BRANCHES

2 EVERGREEN TREE PLANTING
SCALE: NOT TO SCALE

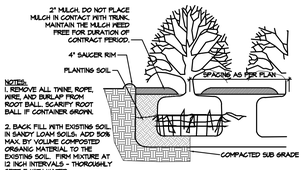

NOTES:
1. REMOVE ALL TWINE, ROPE, WIRE, AND BURLAP FROM ROOT BALL. SCARIFY ROOT BALL IF CONTAINER GROWN.
2. BACK FILL WITH EXISTING SOIL IN SANDY LOAM SOILS. ADD 50% MAX. BY VOLUME COMPOSTED ORGANIC MATERIAL TO THE EXISTING SOIL. FIRM MIXTURE AT 12 INCH INTERVALS - THOROUGHLY SETTLE WITH WATER.

3 SHRUB PLANTING
SCALE: NOT TO SCALE

LANDSCAPE PLANTING NOTES

1. THE CONTRACTOR SHALL FAMILIARIZE HIMSELF WITH THE LOCATION OF ALL UNDERGROUND UTILITY LINES IN THE AREA OF THE WORK AND NOTIFY THE LANDSCAPE ARCHITECT OF ANY DISCREPANCIES OR CONFLICTS PRIOR TO SUBMISSION OF BIDS. THE CONTRACTOR SHALL BE RESPONSIBLE FOR ALL DAMAGE RESULTING FROM NEGLECT OR FAILURE TO COMPLY WITH THIS REQUIREMENT. REFER TO MECHANICAL AND SITE DRAWINGS FOR UTILITY INFORMATION.
2. COORDINATE ALL TREE LOCATIONS WITH DRAINAGE STRUCTURES. ALL TREE PLANTING TO BE KEPT 8 FEET AWAY FROM ANY DRAINAGE OR SANITARY STRUCTURE OR PIPING.
3. ALL PRECAUTIONS SHALL BE TAKEN IN CARTING, STORING, AND PLANTING OF MATERIALS TO PROTECT ADJACENT PAVEMENT AREAS.
4. DAMAGE TO EXISTING OR NEW WORK BY THE CONTRACTOR SHALL BE REPAIRED AT HIS EXPENSE.
5. THE PLANTING PLAN WILL TAKE PRECEDENCE OVER THE PLANT LIST IF DISCREPANCIES BETWEEN THE TWO EXIST. THE LANDSCAPE ARCHITECT SHALL BE NOTIFIED OF SUCH DISCREPANCIES.
6. ALL PLANT NAMES AND DESCRIPTIONS SHALL BE AS DEFINED IN HORTUS THIRD, THE STAFF OF THE L.H. BAILEY HORTORIUM. 1976.
7. PLANTS SHALL BE TRUE TO SPECIES AND VARIETY SPECIFIED AND NURSERY-GROWN IN ACCORDANCE WITH GOOD HORTICULTURAL PRACTICES. UNLESS SPECIFICALLY NOTED, ALL PLANTS SHALL BE OF SPECIMEN QUALITY, EXCEPTIONALLY HEAVY, SYMMETRICAL, FREE OF DISEASE AND INSECTS, EGGS, OR LARVAE, AND SHALL HAVE HEALTHY, WELL-DEVELOPED ROOT SYSTEMS. THE OWNER OR HIS REPRESENTATIVE RESERVES THE RIGHT TO TAG, INSPECT AND APPROVE ALL PLANT MATERIALS AND REJECT ANY PLANTS FOUND TO BE UNACCEPTABLE AT THE NURSERY, AT THE SITE UPON DELIVERY, OR UPON INSTALLATION.
8. ALL PLANTS SHALL BE LABELED BY PLANT NAME. LABELS SHALL BE ATTACHED SECURELY TO ALL PLANTS, BUNDLES, AND CONTAINERS OF PLANT MATERIALS WHEN DELIVERED. PLANT LABELS SHALL BE DURABLE AND LEGIBLE.
9. SUBSTITUTIONS OF PLANT MATERIAL WILL NOT BE PERMITTED UNLESS AUTHORIZED IN WRITING BY THE LANDSCAPE ARCHITECT.
10. ALL PLANT MATERIAL IS TO BE LOCATED AS PER THE PLANTING PLAN. IF OBSTRUCTIONS (ROCK, TREE ROOTS, UTILITIES, ETC.) ARE ENCOUNTERED IN THE EXCAVATION OF THE PLANTING AREAS, ALTERNATE LOCATIONS FOR ANY PLANTING SHALL BE DETERMINED BY THE LANDSCAPE ARCHITECT.
11. ROOT BALLS SHALL BE FIRMLY WRAPPED WITH NONSYNTHETIC, ROTTABLE BURLAP AND SECURED WITH NAILS AND HEAVY NONSYNTHETIC, ROTTABLE TWINE. THE ROOT COLLAR SHALL BE APPARENT AT THE SOIL SURFACE. ROOT BALLS SHALL NOT BE BROKEN, LOOSE, PROCESSED, OR MANUFACTURED AND SHALL ARRIVE AT THE SITE WITH THE ROOT BALL AND BURLAP INTACT. PLANTS SHALL BE DELIVERED TO THE SITE COVERED WITH A TARPAULINE. THE LANDSCAPE ARCHITECT WILL REJECT ANY PLANT MATERIAL NOT MEETING THE ABOVE CONDITIONS. ALL PLANTS THAT CANNOT BE PLANTED IMMEDIATELY UPON DELIVERY SHALL BE KEPT IN THE SHADE, WELL PROTECTED WITH SOIL, WET MULCH, OR OTHER ACCEPTABLE MATERIAL, AND KEPT WELL WATERED.
12. ALL PLANT MATERIALS ARE TO BE INSTALLED AS PER THE PLANTING DETAILS.
13. BACKFILL ALL SHRUB PLANTING PITS WITH 3 PARTS TOPSOIL WITH 1 PART COMPOSTED ORGANIC MATERIAL. ALL PLANTS ARE TO BE BACKFILLED IN 12" LAYERS, THOROUGHLY WATERED AND TAMPED AS BACKFILLING PROGRESSES. SEE PLANTING DETAIL.
14. REMOVE ALL TWINE, ROPE, WIRE, AND BURLAP FROM THE TOP HALF OF THE ROOT BALL. SEE PLANTING DETAIL.
15. UNLESS SPECIFIED ON PLAN OR IN DETAILS, ALL PLANT BEDS ARE TO BE MULCHED WITH 3 INCHES CLEAN, FRESH, SHREDDED HARDWOOD BARK, FREE OF STICKS, LEAVES AND OTHER FOREIGN MATTER. MULCH IS NOT TO BE PLACED WITHIN 3 INCHES OF THE TRUNKS OF TREES AND SHRUBS. SEE PLANTING DETAIL.
16. STAKE AND/OR WRAP TREES ONLY UPON THE APPROVAL OF THE LANDSCAPE ARCHITECT. SEE PLANTING DETAIL.
17. PLANTS SHALL BE SET AT THE SAME RELATIONSHIP TO FINISHED GRADE AS THEY WERE TO THE GROUND FROM WHICH THEY WERE DUG, UNLESS OTHERWISE NOTED ON THE DRAWINGS. DETERMINE THE ELEVATION OF THE ROOT FLARE AND ENSURE THAT IT IS PLANTED AT FINISHED GRADE OR SLIGHTLY ABOVE. SEE PLANTING DETAIL.
18. GRADE ALL NEW PLANTING AREAS TO MAINTAIN THE EXISTING DRAINAGE PATTERN.
19. PROVIDE TOPSOIL TO 12 INCH DEPTH IN ALL LAWN AREAS AND 20 INCH DEPTH IN SHRUB, PERENNIAL AND ANNUAL BEDS. PERENNIAL AND ANNUAL BEDS SHALL BE AMENDED WITH COMPOSTED ORGANIC MATERIAL, 20% BY VOLUME, TO THE UPPER 8-12 INCHES OF THE ENTIRE BED AREA AND ROTOTILLED IN.
20. TOPSOIL AND SEED ALL DISTURBED AREAS NOT BUILT UPON, PAVED, OR LANDSCAPED AS A RESULT OF ANY AND ALL CONSTRUCTION OR STORAGE OF EQUIPMENT, WHETHER AREAS ARE SHOWN ON THE PLAN OR NOT - CONTRACTOR TO FIELD VERIFY AREAS OF SEEDING. SEE SEEDING NOTES.
21. THE CONTRACTOR SHALL GUARANTEE ALL PLANT MATERIAL TO BE IN A HEALTHY AND FLOURISHING CONDITION FOR A PERIOD OF ONE YEAR FROM THE DATE OF ACCEPTANCE. THE CONTRACTOR SHALL REPLACE, WITHOUT COST TO THE OWNER, ALL PLANTS DETERMINED BY THE LANDSCAPE ARCHITECT TO BE DEAD OR IN AN UNACCEPTABLE CONDITION DURING AND AT THE END OF THE GUARANTEE PERIOD. REPLACEMENTS SHALL CLOSELY MATCH ADJACENT SPECIMENS OF THE SAME SPECIES. THE GUARANTEE OF ALL REPLACEMENT PLANTS SHALL EXTEND FOR A PERIOD OF ONE YEAR FROM THE DATE OF THEIR ACCEPTANCE AFTER REPLACEMENT.
22. FALL DIGGING HAZARDS: IT IS VERY RISKY TO TRANSPLANT THE FOLLOWING LIST OF TREES IN THE FALL.
BETULA VARIETIES
OSTRYA HALSEIA VARIETIES PRUNUS -
ALL STONE FRUITS CARPINUS VARIETIES
ILEX OPACA VARIETIES
PYRUS VARIETIES
KOELREUTERIA PANICULATA
CELTIS VARIETIES QUERCUS -
ALL OAKS EXCEPT Q. PALUSTRIS
CERCIDIPHYLLUM VARIETIES
LIQUIDAMBAR VARIETIES
SALIX - WEEPING VARIETIES
LIRIODENDRON VARIETIES
CORNUS FLORIDA & VARS.
SORBUS VARIETIES
CRATAEGUS VARIETIES
MALUS - IN LEAF FAGUS VARIETIES
TILIA TOMENTOSA VARIETIES
NYSSA SYLVATICA
ZELKOVA VARIETIES
THE CONTRACTOR WILL ASSUME RESPONSIBILITY FOR PLANT SURVIVAL OF THE ABOVE MATERIALS IF MOVED DURING THE FALL SEASON.

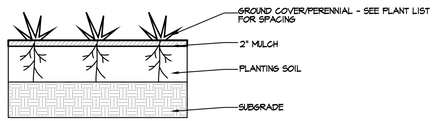

4 GROUNDCOVER PLANTING
SCALE: NOT TO SCALE

GENERAL LAWN (TURFGRASS) SEEDING NOTES

I. SEEDBED PREPARATION

A. Both the subsoil and topsoil layers shall be tested by an accredited soil testing laboratory for soil acidity (pH), and subsequently adjusted, if necessary, to lie within the range of pH 5.5 to pH 7.5, with an ideal pH of 6.5.

B. Nitrogen, phosphorus, and potassium are to be applied separately or in any combination as a Starter Fertilizer that is not to exceed the following rates:
1.0 lb. nitrogen (N) per 1000 sq. ft. (44 lbs. per acre)
2.0 lbs. phosphorus (P) per 1000 sq. ft. (87 lbs. per acre)
2.0 lbs. potassium (K) per 1000 sq. ft. (87 lbs. per acre)
Starter Fertilizer may be distributed by drop or rotary spreaders and applied up to 10 days before seeding, or at the time of seeding, or up to 5 days after seeding operations are completed.

C. The soil of general turfgrass areas shall be tilled by disking, rototilling, or other approved method of tillage to a minimum average depth of 2.0 inches, and shall be leveled and raked to prepare a smooth and even seed bed. Stones and other debris over 1.5 inches in diameter shall be removed from the soil surface and a uniform grade established. If traffic has left soil compacted, the seedbed areas in these conditions must be retilled and resmoothed as above.

II. SEEDING

A. Seeding shall be performed between March 15 and May 15 or August 15 and October 15

B. The seed mixture/blend shall be taken from the following table. Any of the three cultivars may be used from each grass type.

Grass Type	Cultivar	Proportion by Height	Rate
Turf Type Tall Fescue:	Rebel 3D Rebel II Rebel Jr.	50%	8 lbs/1000 sf or 350 lbs/acre
Kentucky Blue Grass:	Baron Glade Merit	25%	3 lbs/1000 sf 130 lbs/acre
Perennial Rye Grass:	Palmer III Prelude III Repell III	25%	10 lbs/1000 sf or 450 lbs/acre

C. Distributed seed shall be uniformly spread in two directions at right angles to each other, using one half the total seed to be distributed in each direction. After seed is distributed, the seed shall be incorporated into the soil to an average depth of 1/8 to 1/4 inch below the soil surface. The seeded areas are to be rolled with a weighted roller after seeding, so that the seed is pressed firmly into the soil.

D. Straw and hay seed mulches shall be spread uniformly over the soil surface at a rate of 1.0 to 2.0 tons per acre. The straw or hay mulch shall cover a minimum of 80% of the soil surface in a layer from 0.5 to 1.5 inches thick, with a maximum of 10% of the soil surface covered with straw or hay mulch over 2.5 inches in thickness. When straw or hay mulch is secured into the soil with a mulch anchoring tool (straw crimper), the application rate of straw or hay mulch shall be increased to 2.5 tons per acre.

E. In sites where the effectiveness of straw or hay seed mulches may be reduced by wind or water erosion, straw or hay seed mulches shall be securely anchored to the soil as soon as possible after they are distributed over the soil surface, or before the first significant rainfall by using a liquid mulch binder and/or tackifier or using mulch netting. Other accepted anchoring methods may also be used. It shall be the responsibility of the seeding contractor to select and use those methods which best protect the soil from loss by erosion, and which ensure the most rapid and complete establishment of germinating seed.

III. POST-SEEDING CARE

A. It shall be the responsibility of the seeding contractor for maintaining newly seeded turfgrass areas for a period of 30 days after seeding operations have been completed, or until the grass has grown to a minimum height of 2 inches, whichever may come first, unless other provisions have been agreed to by the owner, general contractor, landscape architect, etc.

B. IRRIGATION DURING GERMINATION AND ESTABLISHMENT

1. Requirements During Germination -

After seeding operations are completed, the seedbed shall be irrigated with 0.50 to 1.50 inches of water so that the soil is thoroughly moistened to a minimum average depth of 4.0 inches. After this initial moistening, irrigate the seedbed 1-2 times per day with enough water to maintain a satisfactory moisture level to ensure that the seedbed shall not dry out to any extent which may allow germinating seedlings to wilt and die (approx. 0.10 - 0.20 inches of water). Excess water that will cause runoff and puddling is to be avoided. The soil of the seedbed shall be maintained in a moist condition favorable for seed germination until a minimum of 75% of the seed of all species in the seed mixture or seed blend has germinated and grown to a minimum height of 0.50 inch, after which establishment irrigation will begin. Because seed germination rates vary among grass species and cultivars, sufficient time shall be allowed for the germination of all the components of the seed mixture/blend. As a guide, Perennial Ryegrass requires 5-10 days to germinate, Fescues require 7-14 days to germinate; and Kentucky Bluegrass requires 14-21 days to germinate.

2. Requirements During Establishment -

During the period of seedling establishment, the seedbed shall be irrigated deeply every few days with as much as 0.50 inch of water per irrigation or rainfall, so that the soil is kept moist to a minimum average depth of 6.0 inches and the soil surface is allowed to dry between irrigation periods. This is to be continued until the grass has grown to a height of 2.0 inches.

C. After the young grass has grown to a minimum height of 3.0 inches, and before it reaches a maximum height of 5.0 inches, it is recommended that it be mowed to a height of 2.0 inches to 3.0 inches. From that time onward, mowing should be performed as needed in a timely manner so that not more than 1/3 of the total leaf area of the grass is removed during any one cutting. It is further recommended that a mowing height of 2.0 to 3.0 inches be maintained, and that the water needs of the young grass be carefully monitored for the next 2 months.

D. After the young grass has received its first mowing, it is recommended that it be fertilized with a complete fertilizer, such as 20-20-20, 10-10-10, or 5-10-5, etc., so that not more than 0.5 pounds of nitrogen (N) are applied per 1000 sf. This initial (one time) application of fertilizer may be made to young grass when maximum outside temperatures are 85 degrees Fahrenheit or less during the months of September, October, November, March, April, or May, and should only be applied when natural rainfall or irrigation will promptly wash the fertilizer off the leaf blades and into the soil. The contractor shall remove fertilizer from paved areas as soon as possible after fertilizing operations have been completed.

NOTES:
- S.C.T.M. # 900-114-1-46
- THIS PLAN HAS BEEN PREPARED FROM A SITE PLAN AND ARCHITECTURAL DRAWINGS PREPARED BY AXELROD AND CHERVENY ARCHITECTS, A.I.A, P.C. ON MAY 30, 2012 WITH THE LATEST REVISION DATE OF SEPTEMBER 5, 2013
- THIS PLAN HAS BEEN PREPARED FOR COORDINATION PURPOSES AND SITE PLAN APPROVAL ONLY. THIS PLAN IS NOT TO BE USED FOR CONSTRUCTION PURPOSES.
- AREA = 6.46 ACRES
- OWNER: PHILIP YOUNG
  P.O. BOX 464
  WAINSCOTT, NY 11975

ARAIYS DESIGN
LANDSCAPE ARCHITECTURE
Landscape Architects
Site Planners
Development Strategists
Aganam Studio
38 Nugent Street
Suite B
Southampton, NY 11968
(631) 283-1131 (office)
(631) 283-6677 (fax)
info@araiysdesign.com

Project: WATERMILL VILLAGE TOWNHOUSES
Town of Southampton New York

Drawing Title: PLANTING DETAIL SHEET

Revisions

No.	Date	Description
1	08/08/13	SITE PLAN
2	09/12/13	TREATMENT PLANT
3	10/17/13	ARCH/SITE PLAN
4	10/28/13	ARCH/SITE PLAN
5	10/30/13	ARCH/SITE PLAN
5	08/17/14	PLANTING PLAN

Seal:

TIMOTHY A. RUMPH R.L.A.
N.Y.S. LIC. NO 852

Job No.	041606
Date	05/12/08
Scale	AS NOTED
Drn. By	MRM
Chkd. By	TAR
Drawing No.	DT-1

Copyright by Araiys Design L.A., P.C.- This drawing is the property of Araiys Design L.A., P.C.- And may not be made known, be copied, or be manipulated, or any other use be made of without the written permission of Araiys Design L.A., P.C..

P:\Watermill Village\Drawings\Sheets\DT-1 Planting details.dwg

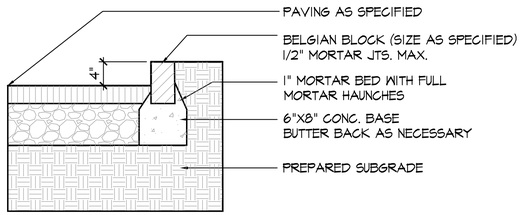

1 BELGIAN BLOCK CURB DETAIL
SCALE: 1"=1'-0"

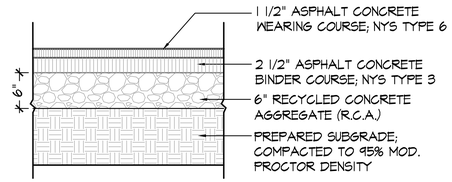

2 ASPHALT PAVING DETAIL
SCALE: 1"=1'-0"

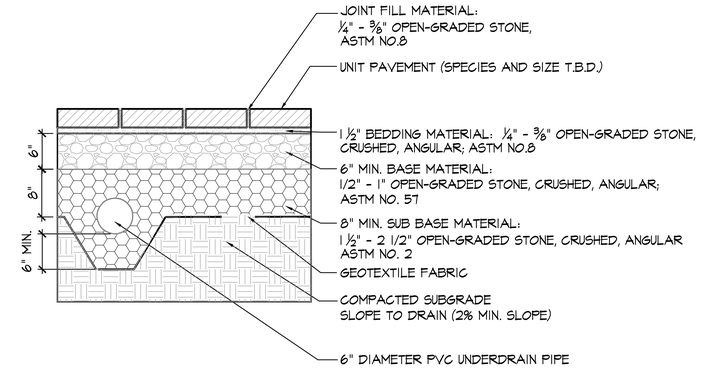

NOTE:

- PATTERN TO BE MANUFACTURER RECOMMENDED FOR VEHIC. APPLICATIONS
- COLOR(S) TO BE APPROVED BY OWNER PRIOR TO INSTALLATION

3 PERMEABLE PAVING DETAIL
SCALE: 1"=1'-0"

SPECIFICATIONS:

UNIT SIZE- 50 CM x 50 CM x 2.5CM(20"x20"x1")
AVAILABLE IN 9 STANDARD ROLL SIZES
UNIT WEIGHT- 510 GRAMS (18OZ.) OR 2.0 KG (4.5 POUNDS)
STRENGTH- 402 KG/CM (5720PSI)
COLOR- BLACK (STANDARD)
RESIN- HDPE (WITH SOME POST-CONSUMER RECYCLED CONTENT)

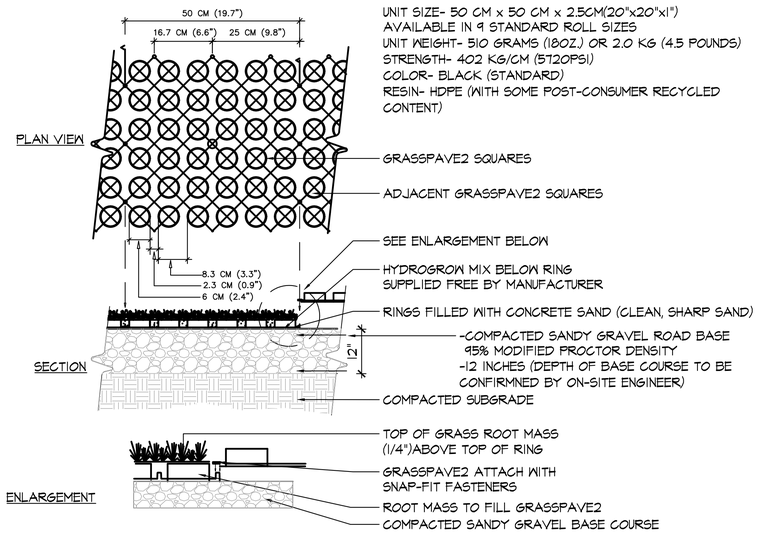

NOTE: GRASS/PLANT TYPES SHALL BE SPECIFIED BY A LANDSCAPE ARCHITECT OR LANDSCAPE DESIGNER.

4 PERMEABLE GRASS PAVE DETAIL
SCALE: 1"=1'-0"

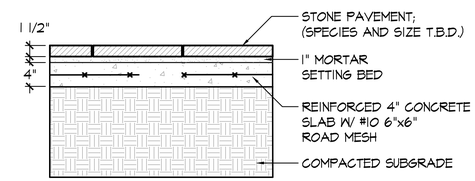

5 STANDARD WALKWAY-PAVEMENT DETAIL
SCALE: NOT TO SCALE

NOTES:

- S.C.T.M. # 900-114-1-46
- THIS PLAN HAS BEEN PREPARED FROM A SITE PLAN AND ARCHITECTURAL DRAWINGS PREPARED BY AXELROD AND CHERVENY ARCHITECTS, AIA, P.C. ON MAY 30, 2012 WITH THE LATEST REVISION DATE OF SEPTEMBER 5, 2013
- THIS PLAN HAS BEEN PREPARED FOR COORDINATION PURPOSES AND SITE PLAN APPROVAL ONLY. THIS PLAN IS NOT TO BE USED FOR CONSTRUCTION PURPOSES.
- AREA = 6.46 ACRES
- OWNER: PHILIP YOUNG
  P.O. BOX 964
  WAINSCOTT, NY 11975

ARAIYS DESIGN
LANDSCAPE ARCHITECTURE
Landscape Architects
Site Planners
Development Strategists
Aganam Studio
38 Nugent Street
Suite B
Southampton, NY 11968
(631) 283-1131 (office)
(631) 283-6677 (fax)
info@araiysdesign.com

Project
WATERMILL VILLAGE TOWNHOUSES
Town of Southampton New York

Drawing Title
SITE DETAIL SHEET

Revisions

No.	Date	Description
1	08/08/13	SITE PLAN
2	09/12/13	TREATMENT PLANT
3	10/17/13	ARCH/SITE PLAN
4	10/28/13	ARCH/SITE PLAN
5	10/30/13	ARCH/SITE PLAN
5	03/17/14	PLANTING PLAN

Seal:

TIMOTHY A. RUMPH R.L.A.
N.Y.S. LIC. NO 852

Job No.	041606
Date	05/12/08
Scale	AS NOTED
Drn. By	MRM
Chkd. By	TAR
Drawing No.	DT-2

P:\Watermill Village\Drawings\Sheets\DT-2 Site Details.dwg

Copyright by Araiys Design L.A., P.C.. This drawing is the property of Araiys Design L.A., P.C.. And may not be made known, be copied, or be manipulated, or any other use be made of without the written permission of Araiys Design L.A., P.C..

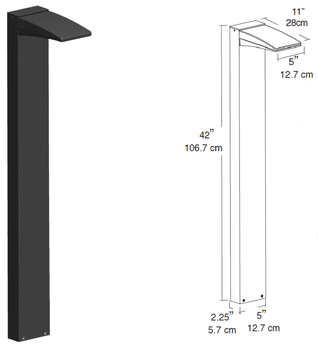

RAB LED BOLLARD LIGHT FIXTURE
SINGLE-MODEL# BLED10Y

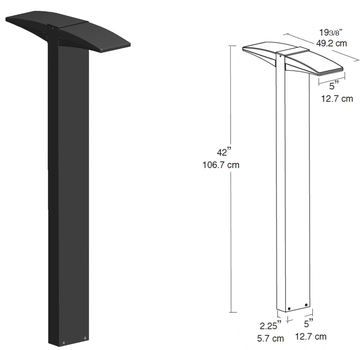

RAB LED BOLLARD LIGHT FIXTURE
BACK-TO-BACK-MODEL# BLED 2X10Y

WATERMILL VILLAGE ILLUMINANCE LEVELS
NOT TO SCALE

LIGHTING PLAN WITH PHOTOMETRICS
1"=30'-0"

LUMINAIRE SCHEDULE

SYMBOL	QTN.	DESCRIPTION	LAMP
	(82)	-RAB BOLLARD LED LIGHT--SINGLE -MODEL BLED 10Y -COLOR TEMPERATURE: WARM -42" HIGH RECTANGULAR BOLLARD -COLOR: BRONZE -FULL CUTOFF FIXTURE, FULLY SHIELDED	10 WATT LED FIXTURE (EQUIVALENT TO A 70 WATT HIGH PRESSURE SODIUM)
	(4)	-RAB BOLLARD LED LIGHT-BACK-BACK -MODEL BLED 2X10Y -COLOR TEMPERATURE: WARM -42" HIGH RECTANGULAR BOLLARD -COLOR: BRONZE -FULL CUTOFF FIXTURE, FULLY SHIELDED	10 WATT LED FIXTURE (EQUIVALENT TO A 70 WATT HIGH PRESSURE SODIUM)

STAT AREA ROADWAY
ILLUMINANCE (FC)
AVERAGE = .33

NOTES:
- BOLLARDS ARE FULL CUTOFF AND FULLY SHIELDED.
- LIGHTS ARE ADJUSTED EACH WINTER AND SUMMER SOLSTICES.
- LIGHTS WILL AUTOMATICALLY TURN ON APPROXIMATELY AT SUNSET.
- PHOTOMETRICS BASED ON FLAT SITE. PROPOSED HEDGING AND TREES TO BUFFER FROM EXCESSIVE LIGHTING AT PROPERTY LINES.
- HEIGHT OF THE BOLLARDS TO BE 42" HIGH
- MAXIMUM WATTAGE OF LIGHT FIXTURE TO BE 10 WATT LED (EQUIVALENT TO 70 WATT HIGH PRESSURE SODIUM)

0 15' 30' 60' 120'
SCALE: 1"=30'

NOTES:
- S.C.T.M. # 900-114-1-46
- THIS PLAN HAS BEEN PREPARED FROM A SITE PLAN AND ARCHITECTURAL DRAWINGS PREPARED BY AXELROD AND CHERVENY ARCHITECTS, AIA, P.C. ON MAY 30, 2012 WITH THE LATEST REVISION DATE OF SEPTEMBER 5, 2013
- THIS PLAN HAS BEEN PREPARED FOR COORDINATION PURPOSES AND SITE PLAN APPROVAL ONLY. THIS PLAN IS NOT TO BE USED FOR CONSTRUCTION PURPOSES.
- AREA = 6.46 ACRES
- OWNER: PHILIP YOUNG
  P.O. BOX 964
  WAINSCOTT, NY 11975

ARAIYS DESIGN
LANDSCAPE ARCHITECTURE
Landscape Architects
Site Planners
Development Strategists
Aganam Studio
39 Nugent Street
Suite B
Southampton, NY 11968
(631) 283-1131 (office)
(631) 283-6677 (fax)
info@araiysdesign.com

Project
WATERMILL VILLAGE TOWNHOUSES
Town of Southampton New York

Drawing Title
LIGHTING PLAN

Revisions

No.	Date	Description
1	08/08/13	SITE PLAN
2	09/12/13	TREATMENT PLANT
3	10/17/13	ARCH/SITE PLAN
4	10/28/13	ARCH/SITE PLAN
5	10/30/13	ARCH/SITE PLAN
5	03/17/14	PLANTING PLAN

Seal:
TIMOTHY A. RUMPH R.L.A.
N.Y.S. LIC. NO 852

Job No. 041606
Date 05/12/08
Scale 1"=30'-0"
Drn. By MRM
Chkd. By TAR
Drawing No. LT-1

Copyright by Araiys Design L.A., P.C.. This drawing is the property of Araiys Design L.A., P.C.. And may not be made known, be copied, or be manipulated, or any other use be made of without the written permission of Araiys Design L.A., P.C..

P:\Watermill Village\Drawings\Sheets\LT-1 Lighting Plan 2.dwg

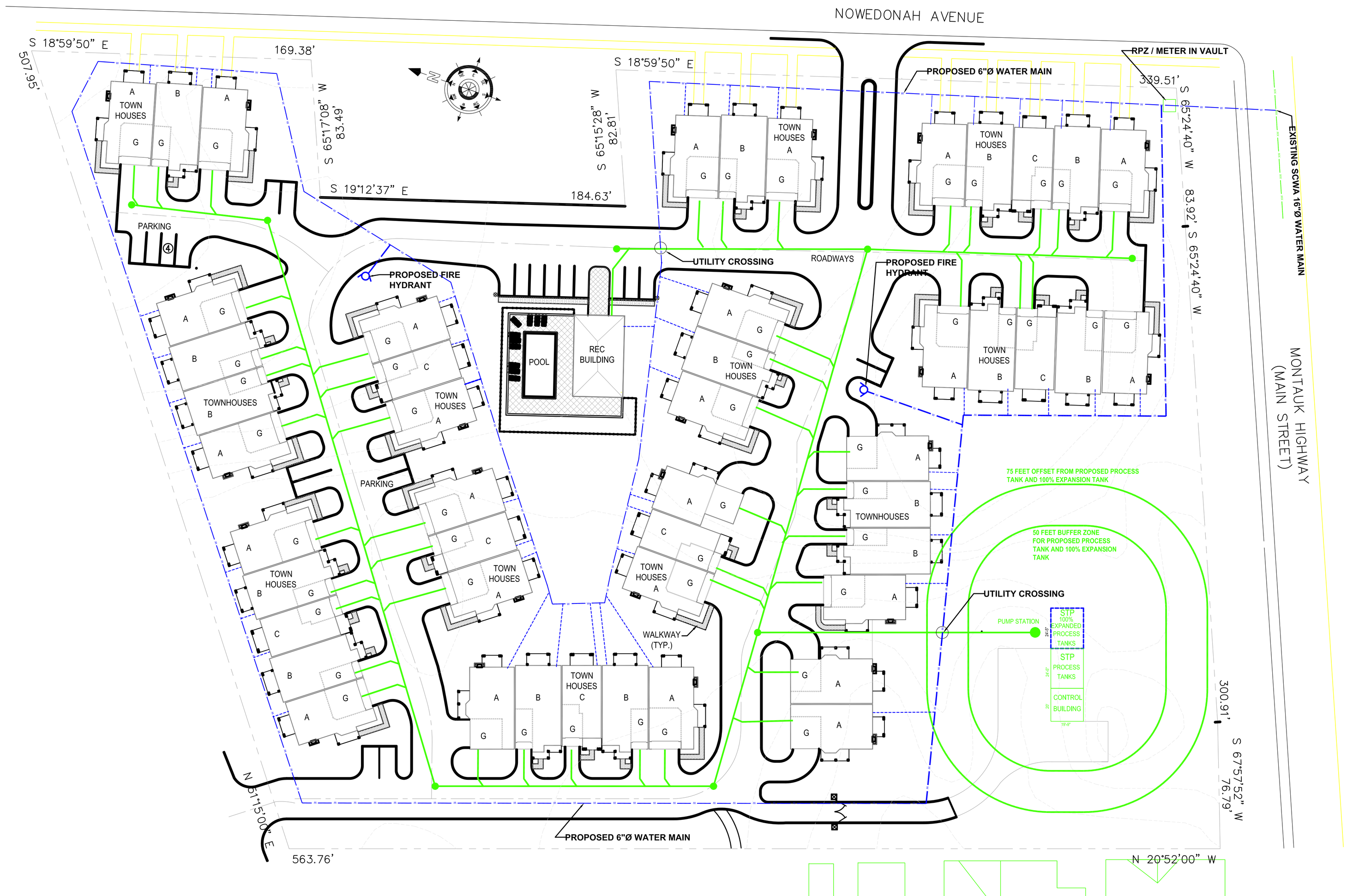

PRELIMINARY SITE PLAN

SCALE: 1" = 30'-0"

PWGC

Strategic Environmental and Engineering Solutions

P.W. GROSSER CONSULTING ENGINEER AND HYDROGEOLOGIST, P.C.

630 Johnson Avenue. • Suite 7
Bohemia • NY • 11716-2618
Phone: (631) 589-6353 • Fax: (631) 589-8705
E-mail: INFO@PWGROSSER.COM

CONSULTANTS

7		
6		
5		
4		
3		
2	Revisions for Town Planning	11-8-13
1	Revisions for Town Planning	9-10-13

WATERMILL VILLAGE TOWNHOMES
PLANNED DEVELOPMENT DISTRICT
WATERMILL, NY

SUFFOLK COUNTY, NY

PRELIMINARY LAYOUT OF WATER AND SEWER APPURTENANCES

1

WMV1101